Kawasaki

Ninja ZX–6R
Ninja ZX-6RR

Motorcycle Service Manual

Quick Reference Guide

General Information	1
Periodic Maintenance	2
Fuel System (DFI)	3
Cooling System	4
Engine Top End	5
Clutch	6
Engine Lubrication System	7
Engine Removal/Installation	8
Crankshaft / Transmission	9
Wheels / Tires	10
Final Drive	11
Brakes	12
Suspension	13
Steering	14
Frame	15
Electrical System	16
Appendix	17

This quick reference guide will assist you in locating a desired topic or procedure.

- Bend the pages back to match the black tab of the desired chapter number with the black tab on the edge at each table of contents page.
- Refer to the sectional table of contents for the exact pages to locate the specific topic required.

Kawasaki

Ninja ZX-6R
Ninja ZX-6RR

Motorcycle Service Manual

All rights reserved. No parts of this publication may be reproduced, stored in a retrieval system, or transmitted in any form or by any means, electronic mechanical photocopying, recording or otherwise, without the prior written permission of Quality Assurance Department/Consumer Products & Machinery Company/Kawasaki Heavy Industries, Ltd., Japan.

No liability can be accepted for any inaccuracies or omissions in this publication, although every possible care has been taken to make it as complete and accurate as possible.

The right is reserved to make changes at any time without prior notice and without incurring an obligation to make such changes to products manufactured previously. See your Motorcycle dealer for the latest information on product improvements incorporated after this publication.

All information contained in this publication is based on the latest product information available at the time of publication. Illustrations and photographs in this publication are intended for reference use only and may not depict actual model component parts.

© 2002 Kawasaki Heavy Industries, Ltd.

Third Edition (1): Sep. 30, 2003 (K)

LIST OF ABBREVIATIONS

A	ampere(s)	lb	pound(s)
ABDC	after bottom dead center	m	meter(s)
AC	alternating current	min	minute(s)
ATDC	after top dead center	N	newton(s)
BBDC	before bottom dead center	Pa	pascal(s)
BDC	bottom dead center	PS	horsepower
BTDC	before top dead center	psi	pound(s) per square inch
°C	degree(s) Celsius	r	revolution
DC	direct current	rpm	revolution(s) per minute
F	farad(s)	TDC	top dead center
°F	degree(s) Fahrenheit	TIR	total indicator reading
ft	foot, feet	V	volt(s)
g	gram(s)	W	watt(s)
h	hour(s)	Ω	ohm(s)
L	liter(s)		

Read OWNER’S MANUAL before operating.

Foreword

This manual is designed primarily for use by trained mechanics in a properly equipped shop. However, it contains enough detail and basic information to make it useful to the owner who desires to perform his own basic maintenance and repair work. A basic knowledge of mechanics, the proper use of tools, and workshop procedures must be understood in order to carry out maintenance and repair satisfactorily. Whenever the owner has insufficient experience or doubts his ability to do the work, all adjustments, maintenance, and repair should be carried out only by qualified mechanics.

In order to perform the work efficiently and to avoid costly mistakes, read the text, thoroughly familiarize yourself with the procedures before starting work, and then do the work carefully in a clean area. Whenever special tools or equipment are specified, do not use makeshift tools or equipment. Precision measurements can only be made if the proper instruments are used, and the use of substitute tools may adversely affect safe operation.

For the duration of the warranty period, we recommend that all repairs and scheduled maintenance be performed in accordance with this service manual. Any owner maintenance or repair procedure not performed in accordance with this manual may void the warranty.

To get the longest life out of your vehicle:

- Follow the Periodic Maintenance Chart in the Service Manual.
- Be alert for problems and non-scheduled maintenance.
- Use proper tools and genuine Kawasaki Motorcycle parts. Special tools, gauges, and testers that are necessary when servicing Kawasaki motorcycles are introduced by the Special Tool Catalog or Manual. Genuine parts provided as spare parts are listed in the Parts Catalog.
- Follow the procedures in this manual carefully. Don't take shortcuts.
- Remember to keep complete records of maintenance and repair with dates and any new parts installed.

How to Use This Manual

In this manual, the product is divided into its major systems and these systems make up the manual's chapters.

The Quick Reference Guide shows you all of the product's system and assists in locating their chapters. Each chapter in turn has its own comprehensive Table of Contents.

For example, if you want ignition coil information, use the Quick Reference Guide to locate the Electrical System chapter. Then, use the Table of Contents on the first page of the chapter to find the ignition coil section.

Whenever you see these WARNING and CAUTION symbols, heed their instructions! Always follow safe operating and maintenance practices.

⚠ WARNING

This warning symbol identifies special instructions or procedures which, if not correctly followed, could result in personal injury, or loss of life.

CAUTION

This caution symbol identifies special instructions or procedures which, if not strictly observed, could result in damage to or destruction of equipment.

This manual contains four more symbols (in addition to WARNING and CAUTION) which will help you distinguish different types of information.

NOTE

○ *This note symbol indicates points of particular interest for more efficient and convenient operation.*

● Indicates a procedural step or work to be done.

○ Indicates a procedural sub-step or how to do the work of the procedural step it follows. It also precedes the text of a NOTE.

★ Indicates a conditional step or what action to take based on the results of the test or inspection in the procedural step or sub-step it follows.

In most chapters an exploded view illustration of the system components follows the Table of Contents. In these illustrations you will find the instructions indicating which parts require specified tightening torque, oil, grease or a locking agent during assembly.

General Information

Table of Contents

Before Servicing 1-2
Model Identification 1-7
General Specifications 1-9
Technical Information – Air Inlet System 1-15
Technical Information – New Ignition Interlock Sidestand 1-18
Technical Information – Tail/Brake Lights Employing LED 1-19
Technical Information – KAWASAKI LOW EXHAUST EMISSION SYSTEM 1-21
Unit Conversion Table 1-22

Before Servicing

Before starting to perform an inspection service or carry out a disassembly and reassembly operation on a motorcycle, read the precautions given below. To facilitate actual operations, notes, illustrations, photographs, cautions, and detailed descriptions have been included in each chapter wherever necessary. This section explains the items that require particular attention during the removal and reinstallation or disassembly and reassembly of general parts.

Especially note the following:

Battery Ground

Before completing any service on the motorcycle, disconnect the battery wires from the battery to prevent the engine from accidentally turning over. Disconnect the ground wire (-) first and then the positive (+). When completed with the service, first connect the positive (+) wire to the positive (+) terminal of the battery then the negative (-) wire to the negative terminal.

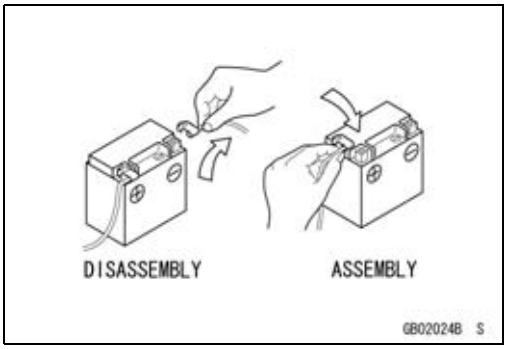

Edges of Parts

Lift large or heavy parts wearing gloves to prevent injury from possible sharp edges on the parts.

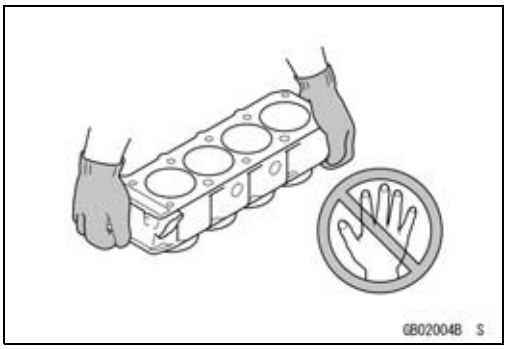

Solvent

Use a high flush point solvent when cleaning parts. High flush point solvent should be used according to directions of the solvent manufacturer.

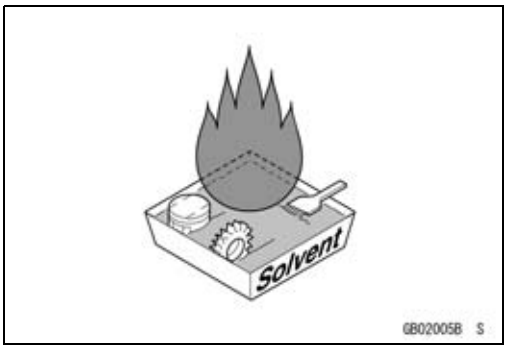

Cleaning vehicle before disassembly

Clean the vehicle thoroughly before disassembly. Dirt or other foreign materials entering into sealed areas during vehicle disassembly can cause excessive wear and decrease performance of the vehicle.

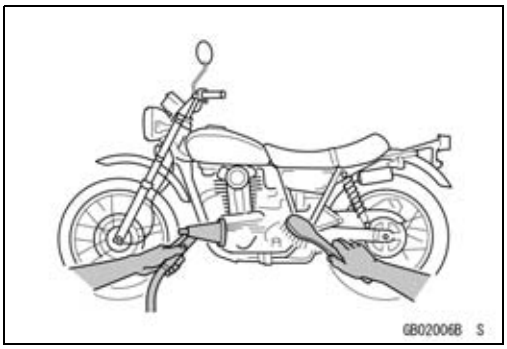

Before Servicing

Arrangement and Cleaning of Removed Parts

Disassembled parts are easy to confuse. Arrange the parts according to the order the parts were disassembled and clean the parts in order prior to assembly.

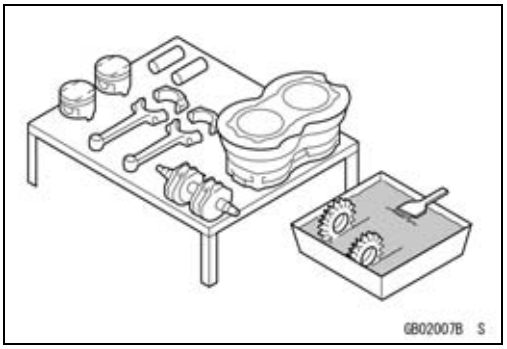

Storage of Removed Parts

After all the parts including subassembly parts have been cleaned, store the parts in a clean area. Put a clean cloth or plastic sheet over the parts to protect from any foreign materials that may collect before re-assembly.

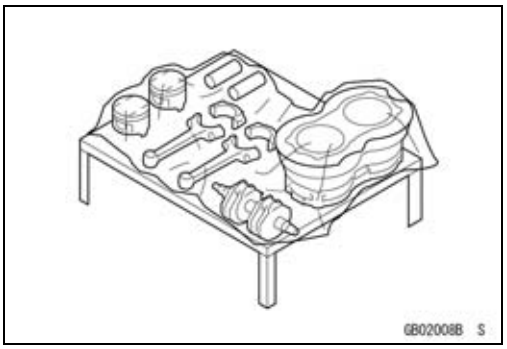

Inspection

Reuse of worn or damaged parts may lead to serious accident. Visually inspect removed parts for corrosion, discoloration, or other damage. Refer to the appropriate sections of this manual for service limits on individual parts. Replace the parts if any damage has been found or if the part is beyond its service limit.

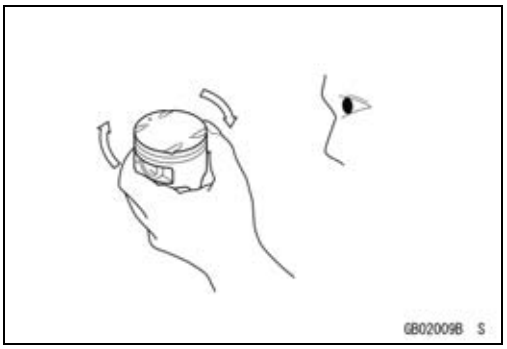

Replacement Parts

Replacement Parts must be KAWASAKI genuine or recommended by KAWASAKI. Gaskets, O rings, Oil seals, Grease seals, circlips or cotter pins must be replaced with new ones whenever disassembled.

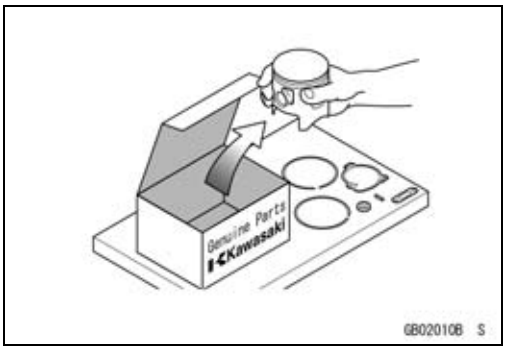

Assembly Order

In most cases assembly order is the reverse of disassembly, however, if assembly order is provided in this Service Manual, follow the procedures given.

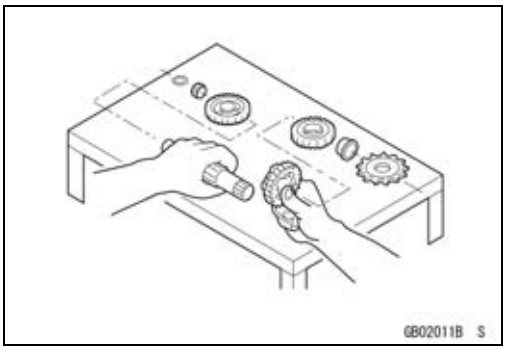

Before Servicing

Tightening Sequence

Bolts, nuts, or screws must be tightened according to the specified sequence to prevent case warpage or deformation which can lead to malfunction. If the specified tightening sequence is not indicated, tighten the fasteners alternating diagonally. Often, the tightening sequence is followed twice -initial tightening and final tightening with torque wrench.

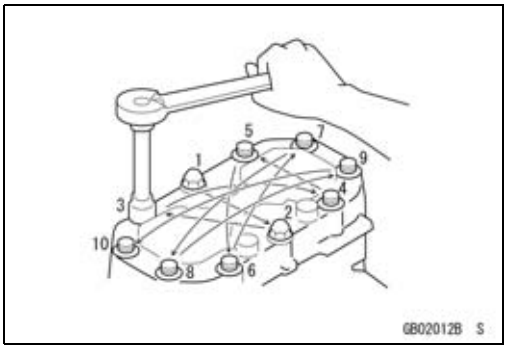

Tightening Torque

Incorrect torque applied to a bolt, nut, or screw may lead to serious damage. Tighten fasteners to the specified torque using a good quality torque wrench.

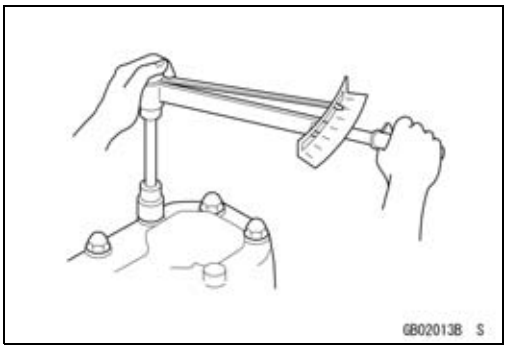

Force

Use common sense during disassembly and assembly, excessive force can cause expensive or hard to repair damage. When necessary, remove screws that have a non -permanent locking agent applied using an impact driver. Use a plastic-faced mallet whenever tapping is necessary.

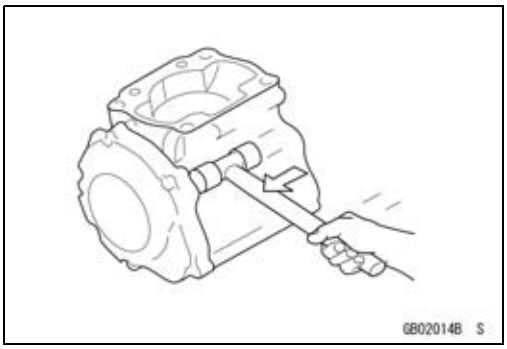

Gasket, Oring

Hardening, shrinkage, or damage of both gaskets and O-rings after disassembly can reduce sealing performance. Remove old gaskets and clean the sealing surfaces thoroughly so that no gasket material or other material remains. Install new gaskets and replace used O-rings when re-assembling

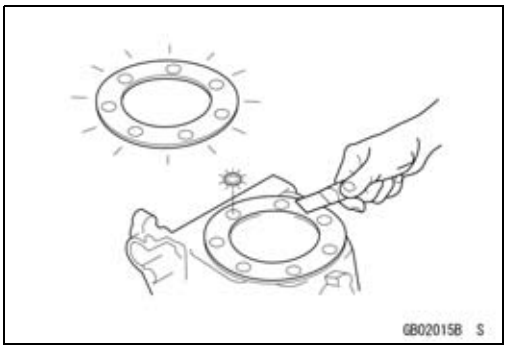

Liquid Gasket, Locking Agent

For applications that require Liquid Gasket or a Locking agent, clean the surfaces so that no oil residue remains before applying liquid gasket or locking agent. Do not apply them excessively. Excessive application can clog oil passages and cause serious damage.

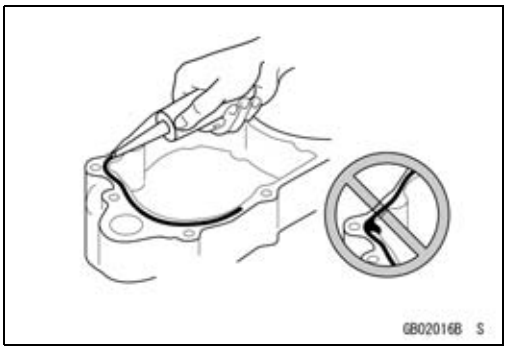

Before Servicing

Press

For items such as bearings or oil seals that must be pressed into place, apply small amount of oil to the contact area. Be sure to maintain proper alignment and use smooth movements when installing.

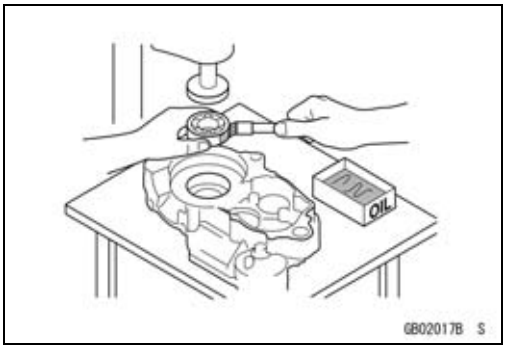

Ball Bearing and Needle Bearing

Do not remove pressed ball or needle unless removal is absolutely necessary. Replace with new ones whenever removed. Press bearings with the manufacturer and size marks facing out. Press the bearing into place by putting pressure on the correct bearing race as shown.

Pressing the incorrect race can cause pressure between the inner and outer race and result in bearing damage.

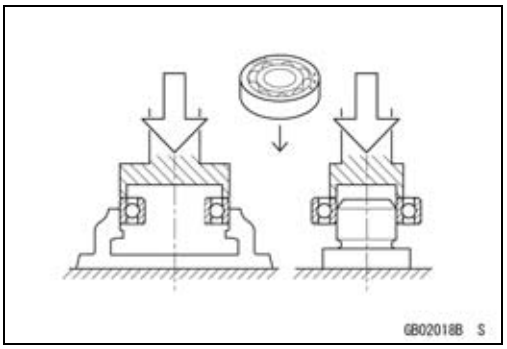

Oil Seal, Grease Seal

Do not remove pressed oil or grease seals unless removal is necessary. Replace with new ones whenever removed. Press new oil seals with manufacture and size marks facing out. Make sure the seal is aligned properly when installing.

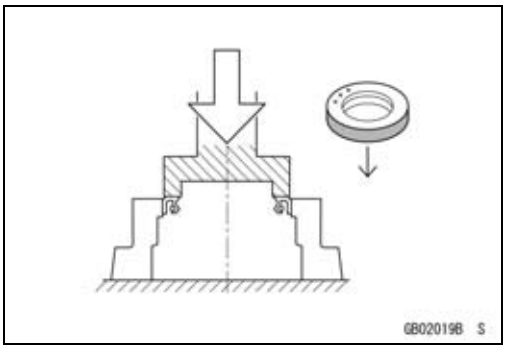

Circlips, Cotter Pins

Replace circlips or cotter pins that were removed with new ones. Install the circlip with its sharp edge facing outward and its chamfered side facing inward to prevent the clip from being pushed out of its groove when loaded. Take care not to open the clip excessively when installing to prevent deformation.

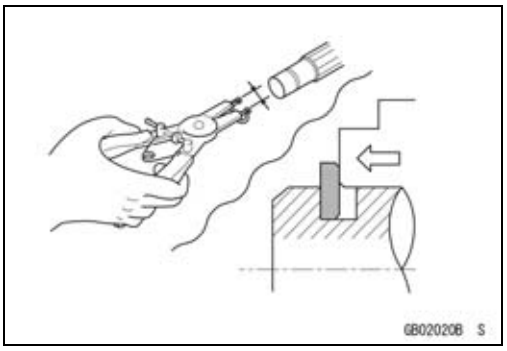

Lubrication

It is important to lubricate rotating or sliding parts during assembly to minimize wear during initial operation. Lubrication points are called out throughout this manual, apply the specific oil or grease as specified.

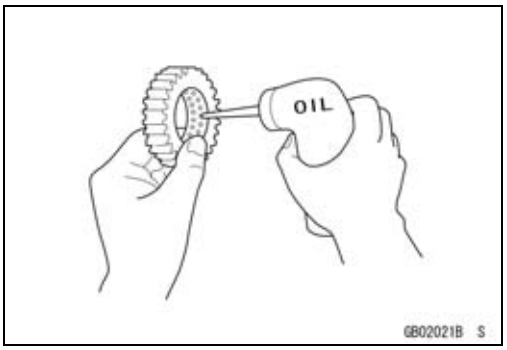

Before Servicing

Direction of Engine Rotation

When rotating the crankshaft by hand, the free play amount of rotating direction will affect the adjustment. Rotate the crankshaft to positive direction (clockwise viewed from output side).

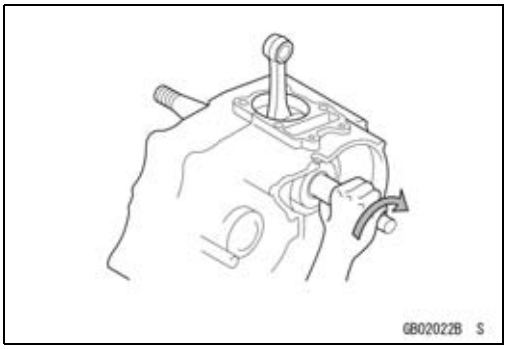

Electrical Wires

A two-color wire is identified first by the primary color and then the stripe color. Unless instructed otherwise, electrical wires must be connected to those of the same color.

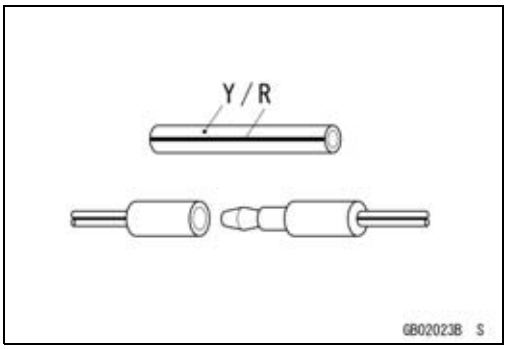

Model Identification

ZX636–B1 (Ninja ZX-6R) Left Side View:

ZX636–B1 (Ninja ZX-6R) Right Side View:

Model Identification

ZX600–K1 (Ninja ZX-6RR) Left Side View:

ZX600–K1 (Ninja ZX-6RR) Right Side View:

General Specifications

Items		ZX636-B1 ~ (Ninja ZX-6R)
Dimensions:		
Overall length		2 025 mm (79.7 in.)
Overall width		720 mm (28.3 in.)
Overall height		1 100 mm (43.3 in.)
Wheelbase		1 400 mm (55.1 in.)
Road clearance		130 mm (5.1 in.)
Seat height		825 mm (32.4 in.)
Dry mass		161 kg (1579 N, 355 lb)
Curb mass:	Front	95 kg (932 N, 209 lb)
	Rear	93 kg (912 N, 205 lb)
Fuel tank capacity		18 L (4.76 US gal)
Performance:		
Minimum turning radius		3.3 m (10.8 ft)
Engine:		
Type		4-stroke, DOHC, 4-cylinder
Cooling system		Liquid-cooled
Bore and stroke		68.0 × 43.8 mm (2.6 x 1.7 in.)
Displacement		636 mL (38.8 cu in.)
Compression ratio		12.8
Maximum horsepower		87.0 kW (118 PS) @13 000 r/min (rpm), (AU) 84.2 kW (114 PS) @12 000 r/min (rpm), (FR) 78.2 kW (106 PS) @12 500 r/min (rpm), (US), (CAL), (CA) – – –
Maximum torque		67.0 N·m (6.8 kgf·m, 49 ft·lb) @11 000 r/min (rpm), (US), (CAL), (CA), (FR) – – –
Carburetion system		FI (Fuel Injection), KEIHIN TTK-38 × 4
Starting system		Electric starter
Ignition system		Battery and coil (transistorized)
Timing advance		Electronically advanced (digital igniter in ECU)
Ignition timing		From 12.5° BTDC @1 300 r/min (rpm) to 35° BTDC @4 600 r/min (rpm)
Spark plug		NGK CR9E
Cylinder numbering method		Left to right, 1-2-3-4
Firing order		1-2-4-3
Valve timing:		
Inlet	Open	58° BTDC
	Close	82° ABDC
	Duration	320°
Exhaust	Open	62° BBDC
	Close	34° ATDC
	Duration	276°
Lubrication system		Forced lubrication (wet sump with cooler)

General Specifications

Items		ZX636-B1 ~ (Ninja ZX-6R)
Engine oil:		
Type		API SE, SF or SG
		API SH or SJ with JASO MA
Viscosity		SAE10W-40
Capacity		4.0 L (4.2 US qt)
Drive Train:		
Primary reduction system:		
Type		Gear
Reduction ratio		2.022 (89/44)
Clutch type		Wet multi disc
Transmission:		
Type		6-speed, constant mesh, return shift
Gear ratios:		
	1st	2.923 (38/13)
	2nd	2.055 (37/18)
	3rd	1.722 (31/18)
	4th	1.450 (29/20)
	5th	1.272 (28/22)
	6th	1.153 (30/26)
Final drive system:		
Type		Chain drive
Reduction ratio		2.666 (40/15)
Overall drive ratio		6.223 @Top gear
Frame:		
Type		Tubular, diamond
Caster (rake angle)		24.5°
Trail		95 mm (3.7 in.)
Front tire:	Type	Tubeless
	Size	120/65 ZR17 M/C (56W)
Rear tire:	Type	Tubeless
	Size	180/55 ZR17 M/C (73W)
Front suspension:		
	Type	Telescopic fork (upside-down)
	Wheel travel	120 mm (4.7 in.)
Rear suspension:		
	Type	Swingarm (uni-trak)
	Wheel travel	135 mm (5.3 in.)
Brake Type:	Front	Dual discs
	Rear	Single disc
Electrical Equipment:		
Battery		12 V 8 Ah
Headlight:		
Type		Semi-sealed beam
Bulb	Hi	12 V 55 W (quartz-halogen) × 2

General Specifications

Items		ZX636-B1 ~ (Ninja ZX-6R)
	Lo	12 V 55 W (quartz-halogen)
Tail/brake light		12 V 0.5/3.8 W (LED)
		(US), (CAL), (CA) 12 V 0.5/5 W (LED)
Alternator:	Type	Three-phase AC
	Rated output	22.5 A / 14 V @5 000 r/min (rpm)

Specifications subject to change without notice, and may not apply to every country.

(US): United States Model
(CAL): California Model
(CA): Canada Model
(AU): Australia Model
(FR): France Model

General Specifications

Items		ZX600-K1 (Ninja ZX-6RR)
Dimensions:		
Overall length		2 025 mm (79.7 in.)
Overall width		720 mm (28.3 in.)
Overall height		1 100 mm (43.3 in.)
Wheelbase		1 400 mm (55.1 in.)
Road clearance		130 mm (5.1 in.)
Seat height		825 mm (32.4 in.)
Dry mass		161 kg (1579 N, 355 lb)
Curb mass:	Front	95 kg (932 N, 209 lb)
	Rear	93 kg (912 N, 205 lb)
Fuel tank capacity		18 L (4.76 US gal)
Performance:		
Minimum turning radius		3.3 m (10.8 ft)
Engine:		
Type		4-stroke, DOHC, 4-cylinder
Cooling system		Liquid-cooled
Bore and stroke		67.0 × 42.5 mm (2.6 x 1.7 in.)
Displacement		599 mL (36.6 cu in.)
Compression ratio		13.0
Maximum horsepower		83.1 kW (113 PS) @13 200 r/min (rpm), (FR) 78.2 kW (106 PS) @13 000 r/min (rpm), (US), (CAL), (CA) – – –
Maximum torque		64.4 N·m (6.6 kgf·m, 47.5 ft·lb) @12 000 r/min (rpm), (US), (CAL), (CA), (FR) – – –
Carburetion system		FI (Fuel Injection), KEIHIN TTK-38 × 4
Starting system		Electric starter
Ignition system		Battery and coil (transistorized)
Timing advance		Electronically advanced (digital igniter in ECU)
Ignition timing		From 12.5° BTDC @1 300 r/min (rpm) to 35° BTDC @4 600 r/min (rpm)
Spark plug		NGK CR9E
Cylinder numbering method		Left to right, 1-2-3-4
Firing order		1-2-4-3
Valve timing:		
Inlet	Open	55° BTDC
	Close	85° ABDC
	Duration	320°
Exhaust	Open	62° BBDC
	Close	34° ATDC
	Duration	276°
Lubrication system		Forced lubrication (wet sump with cooler)
Engine oil:		
Type		API SE, SF or SG API SH or SJ with JASO MA

General Specifications

Items		ZX600-K1 (Ninja ZX-6RR)
Viscosity		SAE10W-40
Capacity		4.0 L (4.2 US qt)
Drive Train:		
Primary reduction system:		
Type		Gear
Reduction ratio		2.022 (89/44)
Clutch type		Wet multi disc
Transmission:		
Type		6-speed, constant mesh, return shift
Gear ratios:		
	1st	2.923 (38/13)
	2nd	2.055 (37/18)
	3rd	1.722 (31/18)
	4th	1.450 (29/20)
	5th	1.272 (28/22)
	6th	1.153 (30/26)
Final drive system:		
Type		Chain drive
Reduction ratio		2.666 (40/15)
Overall drive ratio		6.223 @Top gear
Frame:		
Type		Tubular, diamond
Caster (rake angle)		24.5°
Trail		95 mm (3.7 in.)
Front tire:	Type	Tubeless
	Size	120/65 ZR17 M/C (56W)
Rear tire:	Type	Tubeless
	Size	180/55 ZR17 M/C (73W)
Front suspension:		
	Type	Telescopic fork (upside-down)
	Wheel travel	120 mm (4.7 in.)
Rear suspension:		
	Type	Swingarm (uni-trak)
	Wheel travel	135 mm (5.3 in.)
Brake Type:	Front	Dual discs
	Rear	Single disc
Electrical Equipment:		
Battery		12 V 8 Ah
Headlight:		
Type		Semi-sealed beam
Bulb	Hi	12 V 55 W (quartz-halogen) × 2
	Lo	12 V 55 W (quartz-halogen)
Tail/brake light		12 V 0.5/3.8 W (LED)
		(US), (CAL), (CA) 12 V 0.5/5 W (LED)

General Specifications

Items		ZX600-K1 (Ninja ZX-6RR)
Alternator:	Type	Three-phase AC
	Rated output	22.5 A / 14 V @5 000 r/min (rpm)

Specifications subject to change without notice, and may not apply to every country.

(US): United States Model
(CAL): California Model
(CA): Canada Model
(FR): France Model

Technical Information – Air Inlet System

Center Ram Air Inlet

The ram air duct was moved from both left and right side to center of the fairing so that incoming air has a straighter path to the airbox, increasing ram air efficiency. The duct was also designed to maintain optimum airflow despite extreme changes in bike attitude, such as during hard acceleration, braking, and cornering. With fewer parts and the duct also acting as the instrument, the new system also cuts weight.

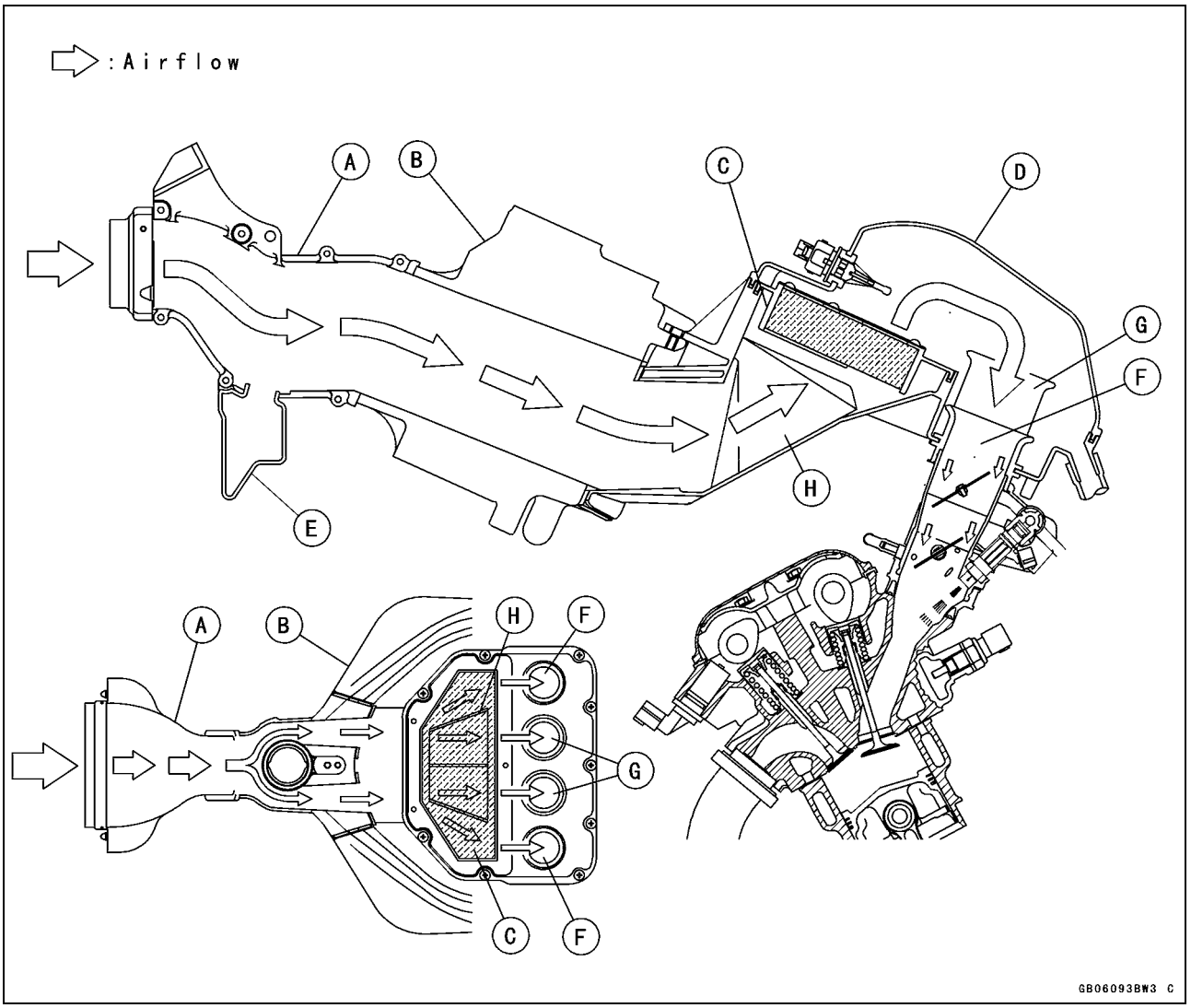

A. Inlet Duct
B. Frame
C. Air Cleaner Element
D. Air Cleaner Housing
E. Resonator
F. Air Duct #1, 4 (Short)
G. Air Duct #2, 3 (Long)
H. Guide Vane

Technical Information – Air Inlet System

Subthrottle Control System

The ZX636–B1 ~ and ZX600–K1 utilize large bore throttle bodies to increase power output. However, sudden changes in throttle opening can cause hesitation and jerky throttle response with a single butterfly valve in a large bore. Therefore two throttle valves are placed in each inlet tract, the main throttle valve located closest to the cylinder and a subthrottle valve placed further up the inlet tract. The main throttle valve is operated by the rider when the throttle grip is turned, while the subthrottle valve is operated by a stepping motor controlled by the ECU. The subthrottle valve automatically adjusts air inlet to more precisely match engine demand, so that when the main throttle is opened quickly there is no hesitation or jerky response.

The subthrottle valves allow the fuel injection system to provide smooth throttle response, similar to that of a constant velocity carburetor, no matter how quickly the throttle is opened.

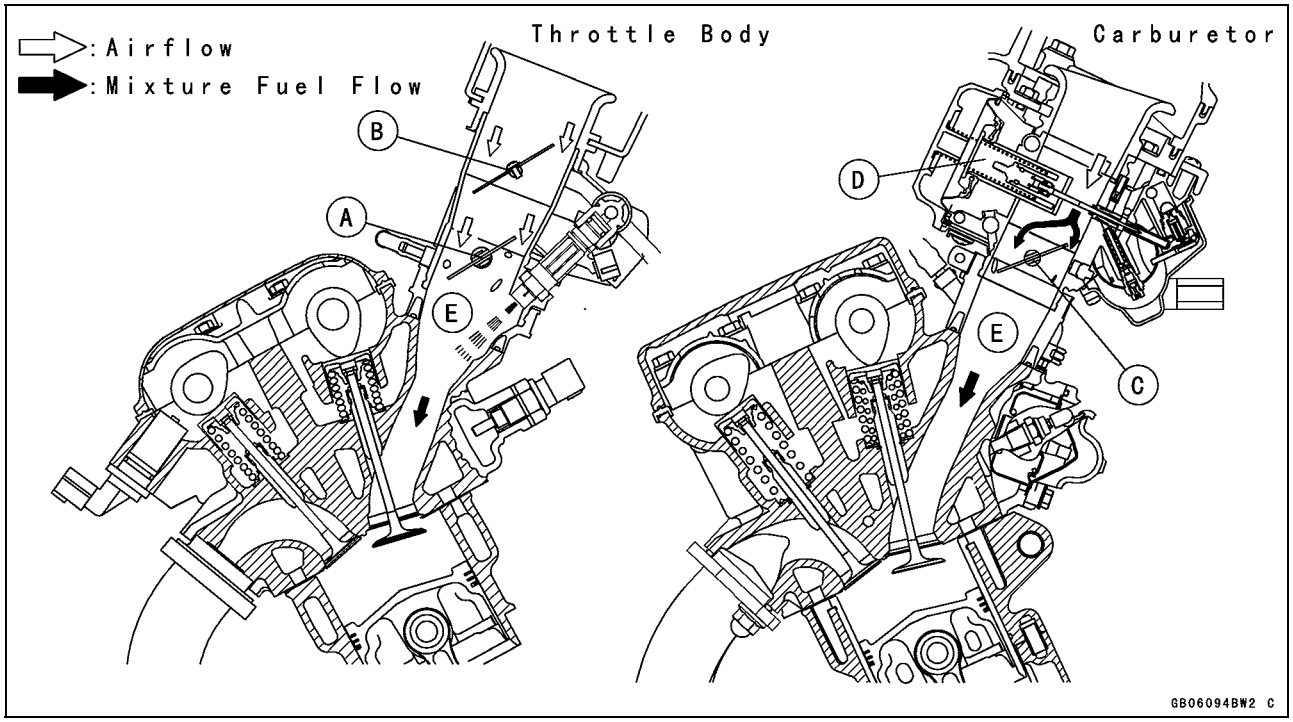

A. Main Throttle Valve
B. Subthrottle Valve
C. Throttle Valve
D. Vacuum Piston
E. Inlet Air

Technical Information – Air Inlet System

Operation

The subthrottle control system consists of the subthrottle valve, subthrottle valve actuator with a stepping motor built in it, ECU, and subthrottle sensor. The subthrottle valve is built in the each throttle body.

The subthrottle control system operates on the signal supplied from the ECU. The open/close operation of the subthrottle valve is performed by the subthrottle actuator which is controlled by the ECU to change the current direction into the motor of the subthrottle valve actuator.

The subthrottle sensor detects the subthrottle valve actuator movement by measuring voltage and the ECU determines the subthrottle valve angle based on the operation map.

When turning the ignition switch ON, every time the ECU automatically drives the subthrottle valve from fully closed position to fully opened position. The ECU memorizes these positions and turns back the subthrottle valve to the original point to confirm the subthrottle valve idling voltage.

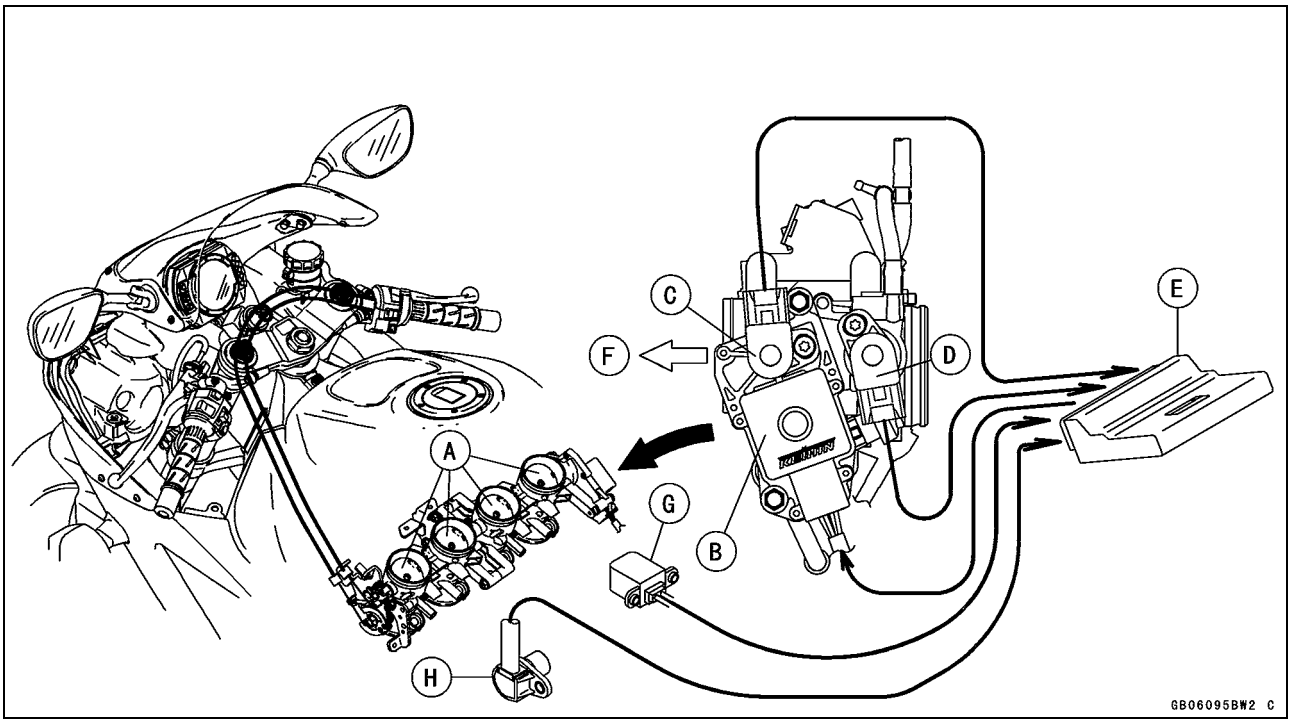

A. Subthrottle Valves
B. Subthrottle Valve Actuator
C. Subthrottle Sensor
D. Main Throttle Sensor
E. ECU (Electric Control Unit)
F. Air Cleaner Side
G. Crankshaft Sensor
H. Speed Sensor

Technical Information – New Ignition Interlock Sidestand

Outline

The New Ignition Interlock Sidestand System applied to ZX636–B1 ~ and ZX600–K1 models that cannot function if gears are engaged and/or the sidestand is not lifted upward even though clutch lever pulled in, which differs from the traditional one. Refer to the tables below as to the engine starts and/or the driving at each condition.

New Ignition Interlock Sidestand System

	Side Stand	Gear Position	Clutch Lever	Engine Start	Engine Run
A	Up	Neutral	Released	Starts	Continue running
B	Up	Neutral	Pulled in	Starts	Continue running
C	Up	In Gear	Released	Doesn’t start	Continue running
D	Up	In Gear	Pulled in	Starts	Continue running
E	Down	Neutral	Released	Starts	Continue running
F	Down	Neutral	Pulled in	Starts	Continue running
G	Down	In Gear	Released	Doesn’t start	Stops
H	Down	In Gear	Pulled in	*Doesn’t start*	*Stops*

Current Ignition Interlock Sidestand System

	Side Stand	Gear Position	Clutch Lever	Engine Start	Engine Run
A	Up	Neutral	Released	Starts	Continue running
B	Up	Neutral	Pulled in	Starts	Continue running
C	Up	In Gear	Released	Doesn’t start	Continue running
D	Up	In Gear	Pulled in	Starts	Continue running
E	Down	Neutral	Released	Starts	Continue running
F	Down	Neutral	Pulled in	Starts	Continue running
G	Down	In Gear	Released	Doesn’t start	Stops
H	Down	In Gear	Pulled in	*Start*	*Continue running*

Technical Information – Tail/Brake Lights Employing LED

Outline

This model employs a tail/brake light containing 21 Light Emitting Diodes (LED). The LED emits luminous beams over a longer life span than those emitted from a traditional electric heated bulb (more than 5 times longer), uses lower voltage, expends lower wattage (approx.1/5), and is quicker responsing.

Due Position of LED Installation

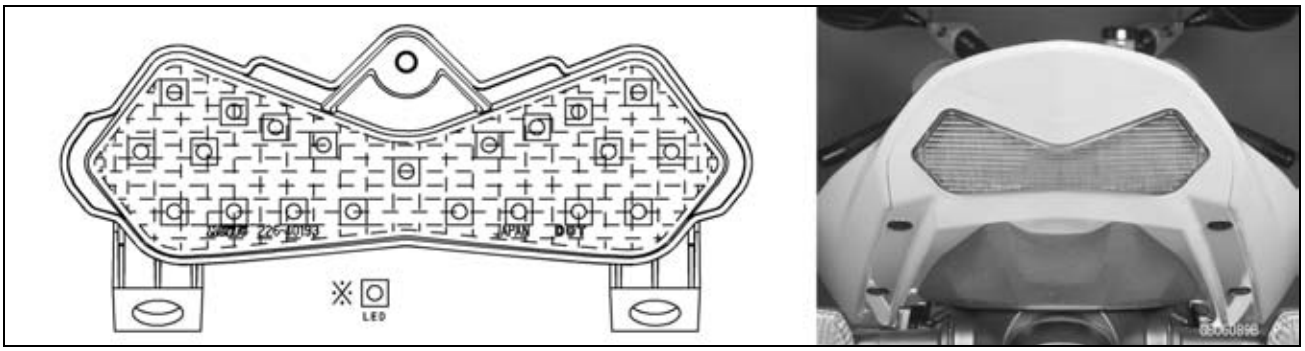

The resistors, the diodes, and the Zener diodes are mounted in the electronic circuits [A] of the LED, which supplies the steady current and voltage to the light.

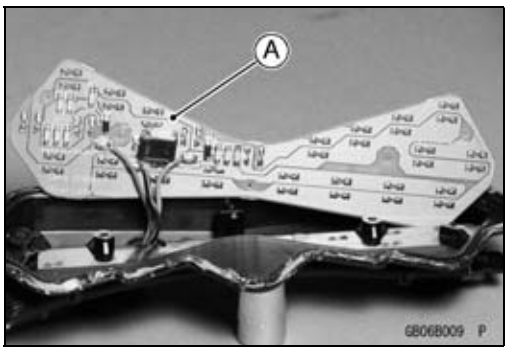

Light Emitting Diode (LED)

The Light Emitting Diode (LED) [A] is an element of semi-conductor diode that converts applied voltage to light.

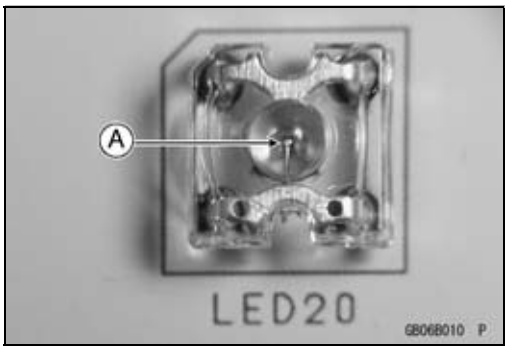

The LED emits luminous beams by the collision of negative charge electrons [A] and positive charge holes [B] when applied the forward voltage and current to the PN junction diode [C].

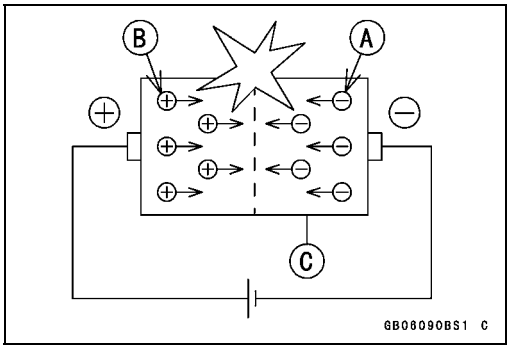

Technical Information – Tail/Brake Lights Employing LED

The emitting color differs according to the materials of semi-conductors.

Materials of Semi-Conductor and Emitting Color

Materials of Semi-Conductor	Emitting Color
GaAsP, GaAlAs	Red
GaP	Green
GaN	Blue

Ga: Gallium
As: Arsenic
P: Phosphorus
N: Nitrogen
Al: Aluminum

Technical Information – KAWASAKI LOW EXHAUST EMISSION SYSTEM

Since the emission regulations become more severe, Kawasaki has adopted a type of simplified KAWASAKI LOW EXHAUST EMISSION SYSTEM (KLEEN), which have no catalyst protection system, according to each regulation of different countries.

The muffler with built-in catalyst has the same durability as the conventional muffler, however, do not use leaded gasoline and do not coast with the ignition system OFF. Running the engine without ignition damages catalyst.

Refer to the ZX636A Service Manual (Part No. 99924-1288) for more information about the KLEEN (theory, maintenance, and handling precautions), including the secondary air injection system.

Honeycomb Type Catalytic Converter

- The converter is a three-way catalytic converter, and its surface is covered with alumina upon which platinum and rhodium are applied, and has a cylindrical metallic honeycomb structure made by bending a corrugated sheet and a flat sheet of stainless steel into a spiral of increasing diameter. The honeycomb structure is convenient for the catalytic converter because it has a large surface area but small size to react effectively and has low exhaust resistance. In addition, its inherent strength helps resist vibration, and has simple structure welded directly on the silencer.
- Generally, the temperature of the exhaust gas must be higher than activation temperature, so the converters are installed in the exhaust manifold rear end where the temperature of exhaust gas is still high. And, the converters will be activated even under low load conditions.
- After the exhaust gas is diluted with the secondary air injection, the catalytic converter works well because of rich oxygen to reduce CO, HC, and NO_x. Accordingly, we can keep the exhaust gas emission within regulation.
- This type of converter works more efficiently as a three-way catalytic converter to reduce CO, HC, and NO_x than the pipe type catalytic converter because of its more and denser catalysts.

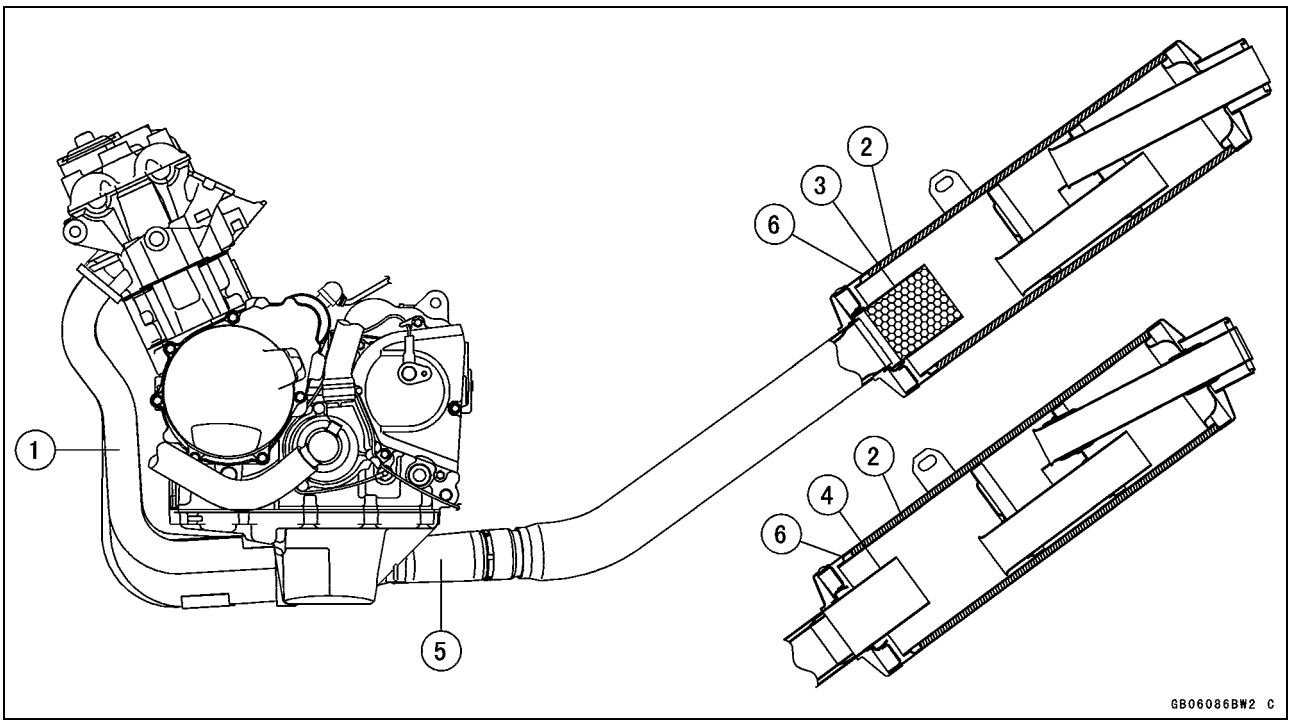

1. Manifold
2. Silencer
3. Honeycomb Type Catalyst
4. Non-Catalyst (Pipe Type)
5. Mark for Manifold
6. Mark for Silencer

Unit Conversion Table

Prefixes for Units:

Prefix	Symbol	Power
mega	M	× 1 000 000
kilo	k	× 1 000
centi	c	× 0.01
milli	m	× 0.001
micro	μ	× 0.000001

Units of Mass:

kg	×	2.205	=	lb
g	×	0.03527	=	oz

Units of Volume:

L	×	0.2642	=	gal (US)
L	×	0.2200	=	gal (imp)
L	×	1.057	=	qt (US)
L	×	0.8799	=	qt (imp)
L	×	2.113	=	pint (US)
L	×	1.816	=	pint (imp)
mL	×	0.03381	=	oz (US)
mL	×	0.02816	=	oz (imp)
mL	×	0.06102	=	cu in

Units of Force:

N	×	0.1020	=	kg
N	×	0.2248	=	lb
kg	×	9.807	=	N
kg	×	2.205	=	lb

Units of Length:

km	×	0.6214	=	mile
m	×	3.281	=	ft
mm	×	0.03937	=	in

Units of Torque:

N·m	×	0.1020	=	kgf·m
N·m	×	0.7376	=	ft·lb
N·m	×	8.851	=	in·lb
kgf·m	×	9.807	=	N·m
kgf·m	×	7.233	=	ft·lb
kgf·m	×	86.80	=	in·lb

Units of Pressure:

kPa	×	0.01020	=	kgf/cm²
kPa	×	0.1450	=	psi
kPa	×	0.7501	=	cm Hg
kgf/cm²	×	98.07	=	kPa
kgf/cm²	×	14.22	=	psi
cm Hg	×	1.333	=	kPa

Units of Speed:

km/h	×	0.6214	=	mph

Units of Power:

kW	×	1.360	=	PS
kW	×	1.341	=	HP
PS	×	0.7355	=	kW
PS	×	0.9863	=	HP

Units of Temperature:

$$\frac{9(°C+40)}{5} - 40 = °F \qquad \frac{5(°F+40)}{9} - 40 = °C$$

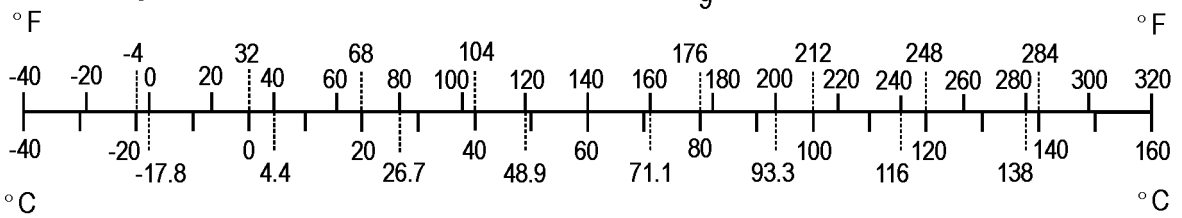

Periodic Maintenance

Table of Contents

Periodic Maintenance Chart 2-2
Torque and Locking Agent..... 2-4
Specifications 2-9
Special Tools 2-11
Maintenance Procedure 2-12
Fuel System (DFI)..... 2-12
Fuel Hose and Connection Inspection..... 2-12
Throttle Control System Inspection..... 2-12
Idle Speed Inspection 2-13
Idle Speed Adjustment..... 2-13
Engine Vacuum Synchronization Inspection..... 2-14
Air Cleaner Element Replacement..... 2-17
Evaporative Emission Control System Inspection (California model) 2-18
Cooling System..... 2-19
Cooling Hose and Connection Inspection..... 2-19
Coolant Change..... 2-19
Engine Top End 2-21
Air Suction Valve Check..... 2-21
Valve Clearance Check..... 2-22
Clutch..... 2-26
Clutch Adjustment Check..... 2-26
Engine Lubrication System..... 2-27
Engine Oil Change..... 2-27
Oil Filter Replacement 2-27
Wheels/Tires..... 2-28
Tire Wear Check 2-28
Final Drive..... 2-29
Drive Chain Wear Check 2-29
Drive Chain Lubrication..... 2-32
Brakes..... 2-32
Brake Pad Wear Check 2-32
Brake Light Switch Check..... 2-32
Caliper Piston Seal and Dust Seal Replacement..... 2-33
Brake Master Cylinder Cup and Dust Seal Replacement 2-33
Brake Fluid Check..... 2-33
Brake Hoses and Connections Check..... 2-37
Suspension..... 2-37
Front Fork Oil Leak Check..... 2-37
Rear Shock Absorber Oil Leak Check..... 2-37
Swingarm Pivot Lubrication 2-37
Uni-trak Linkage Lubrication 2-37
Steering 2-38
Steering Check 2-38
Steering Stem Bearing Lubrication..... 2-39
Electrical System 2-39
Spark Plug Check 2-39
General Lubrication 2-40
Lubrication 2-40
Nut, Bolts, and Fasteners Tightness Check..... 2-42
Tightness Inspection 2-42

Periodic Maintenance Chart

The scheduled maintenance must be done in accordance with this chart to keep the motorcycle in good running condition. **The initial maintenance is vitally important and must not be neglected.**

FREQUENCY	Whichever comes first → ↓	1 000 km (600 mile)	6 000 km (4 000 mile)	12 000 km (7 500 mile)	18 000 km (12 000 mile)	24 000 km (15 000 mile)	30 000 km (20 000 mile)	36 000 km (24 000 mile)	* ODOMETER READING
OPERATION	Every								See Page
Air cleaner element replace #					●			●	2–18
Throttle control system - inspect †		●	●	●	●	●	●	●	2–12
Idle speed - inspect †		●		●		●		●	2–13
Engine vacuum synchronization - inspect †				●		●		●	2–14
Fuel hoses, Connections - inspect †			●	●	●	●	●	●	2–12
Evaporative emission control system (CAL) - inspect †		●	●	●	●	●	●	●	2–19
Cooling hoses, connection - inspect †		●							2–20
Coolant - change	2 years					●			2–20
Air suction valve - inspect †			●	●	●	●	●	●	2–22
Valve clearance - inspect †						●			2–22
Clutch adjustment - inspect †		●	●	●	●	●	●	●	2–27
Engine oil - change #	year	●		●		●		●	2–28
Oil filter - replace		●		●		●		●	2–28
Tire wear - inspect †			●	●	●	●	●	●	2–29
Drive chain wear - inspect †#			●	●	●	●	●	●	2–31
Drive chain - lubricate #	600 km		●	●	●	●	●	●	2–33
Drive chain slack - inspect †#	1000 km	●	●	●	●	●	●	●	2–31
Brake pad wear - inspect †#			●	●	●	●	●	●	2–33
Brake light switch - inspect †		●	●	●	●	●	●	●	2–34
Brake hoses, connections - inspect †			●	●	●	●	●	●	2–40
Brake fluid level - inspect †	month	●	●	●	●	●	●	●	2–35
Brake fluid - change	2 years					●			2–36
Brake master cylinder cup and dust seal - replace	4 years								2–35
Caliper piston seal and dust seal - replace	4 years								2–34

Periodic Maintenance Chart

FREQUENCY	Whichever comes first → ↓	1 000 km (600 mile)	6 000 km (4 000 mile)	12 000 km (7 500 mile)	18 000 km (12 000 mile)	24 000 km (15 000 mile)	30 000 km (20 000 mile)	36 000 km (24 000 mile)	* ODOMETER READING
OPERATION	Every								See Page
Rear shock absorber oil leak - inspect †				●		●		●	2–41
Front fork oil leak - inspect †				●		●		●	2–41
Swingarm pivot, Uni-trak linkage - lubricate				●		●		●	2–41
Steering - inspect †		●	●	●	●	●	●	●	2–42
Steering stem bearing - lubricate	2 years					●			2–43
Spark plug - clean and gap †			●	●	●	●	●	●	2–44
General lubrication - perform				●		●		●	2–44
Nut, bolts, and fasteners tightness - inspect †		●		●		●		●	2–46

: Service more frequently when operating in severe conditions; dusty, wet, muddy, high speed, or frequent starting / stopping.
* : For higher odometer readings, repeat at the frequency interval established here.
† : Replace, add, adjust, clean, or torque if necessary.
(CAL): California model only

Torque and Locking Agent

The following tables list the tightening torque for the major fasteners requiring use of a non-permanent locking agent or liquid gasket.

Letters used in the "Remarks" column mean:

AL: Tighten the two clamp bolts alternately two times to ensure even tightening torque.
L: Apply a non-permanent locking agent to the threads.
G: Apply grease to the threads.
MO: Apply molybdenum disulfide grease oil solution.
O: Apply oil to the threads and seating surface.
S: Tighten the fasteners following the specified sequence.
SS: Apply silicone sealant.
Si: Apply silicone grease (ex. PBC grease).
R: Replacement parts

The table below, relating tightening torque to thread diameter, lists the basic torque for the bolts and nuts. Use this table for only the bolts and nuts which do not require a specific torque value. All of the values are for use with dry solvent-cleaned threads.

Basic Torque for General Fasteners

Threads dia. (mm)	Torque		
	N·m	kgf·m	ft·lb
5	3.4 ~ 4.9	0.35 ~ 0.50	30 ~ 43 in·lb
6	5.9 ~ 7.8	0.60 ~ 0.80	52 ~ 69 in·lb
8	14 ~19	1.4 ~1.9	10.0 ~ 13.5
10	25 ~ 34	2.6 ~ 3.5	19.0 ~ 25
12	44 ~ 61	4.5 ~ 6.2	33 ~ 45
14	73 ~ 98	7.4 ~ 10.0	54 ~ 72
16	115 ~ 155	11.5 ~ 16.0	83 ~ 115
18	165 ~ 225	17.0 ~ 23.0	125 ~ 165
20	225 ~ 325	23 ~ 33	165 ~ 240

Fastener	Torque			Remarks
	N·m	kgf·m	ft·lb	
Fuel System:				
Air Cleaner Housing Mounting Bolt	6.9	0.70	61 in·lb	
Air Inlet Duct Mounting Bolts	6.9	0.70	61 in·lb	
Air Cleaner Housing Holder Clamp Bolts	2.5	0.25	22 in·lb	
Intake Air Pressure Sensor Screw	4.9	0.50	43 in·lb	
Atmospheric Pressure Sensor Screw	4.9	0.50	43 in·lb	
Fuel Delivery Pipe Mounting Screws	3.4	0.35	30 in·lb	
Throttle Body Assembly Holder Clamp Bolts	3.0	0.31	27 in·lb	
Throttle Body Assembly Holder Bolts	12	1.2	106 in·lb	L
Camshaft Position Sensor	12	1.2	106 in·lb	
Water Temperature Sensor	25	2.5	18	SS
Vehicle-Down Sensor	2.0	0.20	17 in·lb	
Speed Sensor Mounting Bolt	3.9	0.40	35 in·lb	L
Crankshaft Sensor Mounting Bolts	5.9	0.60	52 in·lb	
Fuel Pump Bolts	9.8	1.0	87 in·lb	
Cooling System:				
Water Hose Clamp Screws	2.0	0.20	17 in·lb	
Coolant Drain Plug (Water Pump)	8.8	0.90	78 in·lb	
Coolant Drain Plug (Cylinder)	8.8	0.90	78 in·lb	
Radiator Fan Switch	18	1.8	13	
Water Temperature Sensor	25	2.5	18	SS
Water Pump Impeller Bolt	9.8	1.0	87 in·lb	
Water Pump Cover Bolts	12	1.2	104 in·lb	L
Thermostat Housing Cover Bolts	5.9	0.60	52 in·lb	

Torque and Locking Agent

Fastener	Torque			Remarks
	N·m	kgf·m	ft·lb	
Coolant By-pass Fitting	8.8	0.90	78 in·lb	L
Water Hose Fitting Bolts	12	1.2	106 in·lb	
Radiator Mounting Bolts	6.9	0.70	61 in·lb	
Radiator Bracket Mounting Bolts	6.9	0.70	61 in·lb	
Coolant Reserve Tank Mounting Screws	6.9	0.70	61 in·lb	
Oil Cooler Bolt	78	8.0	58	
Water Passage Plugs	20	2.0	14	
Engine Top End:				
Spark Plugs	13	1.3	113 in·lb	
Air Suction Valve Cover Bolts	12	1.2	104 in·lb	L
Cylinder Head Cover Bolts	9.8	1.0	87 in·lb	
Camshaft Chain Tensioner Mounting Bolts	9.8	1.0	87 in·lb	
Camshaft Cap Bolts	12	1.2	104 in·lb	
Cylinder Head Bolts: ϕ9	40	4.1	30	S, O (Washer)
ϕ6	12	1.2	104 in·lb	S
Cylinder Head Jacket Plug (Left)	20	2.0	14.5	L
Cylinder Head Jacket Plug (Upper)	20	2.0	14.5	L
Front Camshaft Chain Guide Bolt (Upper)	25	2.5	18	
Throttle Valve Holder Bolts	12	1.2	104 in·lb	
Exhaust Pipe Clamp Bolts	17	1.7	12	
Coolant By-pass Fitting	8.8	0.90	78 in·lb	L
Water Temperature Sensor	25	2.5	18	SS
Camshaft Position Sensor Bolt	12	1.2	104 in·lb	
Camshaft Sprocket Bolts	15	1.5	11	L
Front Camshaft Chain Guide Bolt (Lower)	12	1.2	104 in·lb	
Rear Camshaft Chain Guide Bolt	25	2.5	18	
Camshaft Chain Tensioner Cap Bolt	29	3.0	21	
Water Jacket Drain Bolt	8.8	0.90	78 in·lb	
Exhaust Pipe Manifold Nut	17	1.7	12	
Muffler Body Bolt	30	3.0	22	
Clutch:				
Clutch Cover Bolts	12	1.2	104 in·lb	L(2, Front)
Clutch Spring Bolts	8.8	0.90	78 in·lb	
Clutch Hub Nut	130	13.5	98	R
Clutch Lever Holder Bolts	7.8	0.80	69 in·lb	S
Clutch Sub Hub Bolts	25	2.5	18	L
Engine Lubrication System:				
Oil Filler Plug	1.5	0.15	13 in·lb	
Engine Drain Plug	29	3.0	22	
Oil Filter (Cartridge type)	31	3.2	23	R, O
Oil Cooler Bolt	78	8.0	58	R
Oil Pan Bolts	9.8	1.0	87 in·lb	

Torque and Locking Agent

Fastener	Torque			Remarks
	N·m	kgf·m	ft·lb	
Oil Pipe Holder Bolts	12	1.2	104 in·lb	
Oil Pressure Relief Valve	15	1.5	11	L
Oil Pressure Switch	15	1.5	11	SS
Oil Pressure Switch Terminal Bolt	1.5	0.15	13 in·lb	G
Impeller Bolt	9.8	1.0	87 in·lb	
Oil Passage Plug	15	1.5	11	
Oil Jet Nozzle Bolts	6.9	0.70	61 in·lb	
Cooling Hose Clamp	2.0	0.20	17 in·lb	
Oil Filter Clamp Bolt	5.9	0.60	52 in·lb	
Engine Removal/Installation:				
Engine Mounting Bolts and Nuts	44	4.5	33	S
Engine Mounting Locknuts	49	5.0	36	
Engine Mounting Adjusting Bolts	20	2.0	14	S
Crankshaft/Transmission:				
Breather Plate Bolts	9.8	1.0	87 in·lb	L
Oil Passage Plug (Left)	20	2.0	14.5	L
Oil Passage Plug (Right)	15	1.5	11	
Connecting Rod Big End Nuts	in the text	←	←	
Harness Clamp Bolt	8.8	0.90	78 in·lb	
Timing Rotor Bolt	44	4.5	33	
Oil Pressure Switch	15	1.5	11	SS
Gear Positioning Lever Bolt	9.8	1.0	87 in·lb	
Shift Shaft Return Spring Pin (Bolt)	28	2.9	21	L
Neutral Switch	15	1.5	11	
Shift Drum Bearing Holder Bolt	12	1.2	104 in·lb	
Shift Drum Bearing Holder Screw	4.9	0.50	43 in·lb	L
Shift Drum Cam Holder Bolt	12	1.2	104 in·lb	L
Oil Pipe Holder Bolts	12	1.23	104 in·lb	
Crankshaft Sensor Cover Bolts	9.8	1.0	87 in·lb	L (1)
Oil Jet Nozzle Bolts	6.9	0.70	61 in·lb	L
Starter Motor Clutch Bolt	33	3.4	24	L
Upper Crankcase Bolts (7mm)	20	2.0	14.5	S
Upper Crankcase Bolts (6mm)	12	1.2	104 in·lb	S
Lower Crankcase Bolts (7mm) (Front)	27	2.8	20	S
Lower Crankcase Bolts (7mm) (Rear)	24	2.4	18	S
Lower Crankcase Bolts(6mm)	12	1.2	104 in·lb	S
Wheels/Tires:				
Front Axle Clamp Bolts	20	2.0	14.5	AL
Front Axle Nut	127	13.0	94	
Rear Axle Nut	127	13.0	94	
Final Drive:				
Engine Sprocket Nut	125	13.0	92	MO
Engine Sprocket Cover Bolts	6.9	0.70	61 in·lb	

Torque and Locking Agent

Fastener	Torque			Remarks
	N·m	kgf·m	ft·lb	
Speed Sensor Mounting Bolt	3.9	0.40	35 in·lb	L
Rear Sprocket Nuts	59	6.0	43	
Rear Sprocket Studs	–	–	–	L
Brakes:				
Bleed Valves	7.8	0.80	69 in·lb	
Brake Hose Banjo Bolts	25	2.5	18	
Brake Lever Pivot Bolt	1.0	0.10	9 in·lb	Si
Brake Lever Pivot Bolt Locknut	6.0	0.61	53 in·lb	
Front Brake Reservoir Cap Stopper Screws	1.2	0.12	10 in·lb	
Front Brake Light Switch Screws	1.2	0.12	10 in·lb	
Front Master Cylinder Clamp Bolts	8.8	0.90	78 in·lb	S
Front Caliper Mounting Bolts	34	3.5	25	
Caliper Assembly Bolts (Front)	22	2.2	16	
Front Brake Disc Mounting Bolts	27	2.8	20	L
Rear Brake Disc Mounting Bolts	27	2.8	20	L
Rear Caliper Mounting Bolts	25	2.5	18	
Rear Master Cylinder Mounting Bolts	25	2.5	18	
Rear Master Cylinder Push Rod Locknut	18	1.8	13	
Front Brake Pad Pins	15	1.5	11	
Suspension:				
Front Fork Clamp Bolts (Upper)	20	2.0	14.5	
Front Fork Clamp Bolts (Lower)	20	2.0	14.5	AL
Front Fork Top Plugs	23	2.3	17	
Piston Rod Nut	15	1.5	11	
Front Fork Bottom Allen Bolts	40	4.0	30	L
Front Axle Clamp Bolts	20	2.0	14.5	AL
Rear Shock Absorber Nuts (Upper and Lower)	34	3.5	25	
Rear Shock Absorber Upper Bracket Nut	59	6.0	43	
Swingarm Pivot Shaft Nut	108	11	81	
Uni-Trak				
Rocker Arm Nut	34	3.5	25	
Tie-Rod Nuts	59	6.0	43	
Swingarm Pivot Shaft ZX636	20	2.0	14	
ZX600	25	2.5	18	
Swingarm Pivot Shaft Lock Nut	98	10	72	
Steering:				
Steering Stem Head Nut	78	8.0	58	
Steering Stem Nut	20	2.0	14.5	
Handlebar Bolts	25	2.5	18	
Handlebar Holder Position Bolts	9.8	1.0	87 in·lb	L
Handlebar Weight Screws	–	–	–	L
Handlebar Switch Housing Screws	3.5	0.36	31 in·lb	

Torque and Locking Agent

Fastener	Torque			Remarks
	N·m	kgf·m	ft·lb	
Clutch Lever Holder Bolts	7.8	0.80	69 in·lb	S
Frame:				
Footpeg Holder Bolts	34	3.5	25	L
Side Stand Bolt	44	4.5	32	G
Footpeg Stay Bolts	25	2.5	18	
Side Stand Bracket Bolts	49	5.0	36	
Rear Frame Bolts and Nuts	59	6.0	43	
Side Stand Switch Bolt	8.8	0.90	78 in·lb	L
Wind Shield Mounting Screws	0.40	0.04	3.5 in·lb	
Front Fender Mounting Bolts	3.9	0.40	35 in·lb	
Electrical System:				
Spark Plugs	13	1.3	113 in·lb	
Alternator Rotor Bolt	120	12.0	87	
Stator Coil Bolts	12	1.2	110 in·lb	L
Alternator Lead Holding Plate Bolts	6.9	0.70	61 in·lb	L
Engine Ground Lead Terminal Bolt	9.8	1.0	87 in·lb	
Alternator Cover Bolts	12	1.2	104 in·lb	
Crankshaft Sensor Cover Bolts	9.8	1.0	87 in·lb	L (1)
Crankshaft Sensor Bolts	5.9	0.60	52 in·lb	
Timing Rotor Bolt	44	4.5	33	
Starter Motor Mounting Bolts	9.8	1.0	87 in·lb	L
Handlebar Switch Housing Screws	3.5	0.36	31 in·lb	
Radiator Fan Switch	18	1.8	13	
Water Temperature Sensor	25	2.5	18	L
Oil Pressure Switch	15	1.5	11	SS
Oil Pressure Switch Terminal Bolt	1.5	0.15	13 in·lb	G
Neutral Switch	15	1.5	11	
Front Brake Light Switch Screws	1.2	0.12	10 in·lb	
Side Stand Switch Bolt	8.8	0.90	78 in·lb	L
Tail/Brake Light Mounting Screws	1.2	0.12	12 in·lb	
License Light Mounting Screws	1.2	0.12	12 in·lb	
License Light Mounting Assembly Screws	1.0	0.10	8.7 in·lb	
Camshaft Position Sensor Bolt	12	1.2	106 in·lb	
Fuel Pump Bolt	9.8	1.0	87 in·lb	S

Specifications

Item	Standard	Service Limit
Fuel System:		
Throttle grip free play	2 ~ 3 mm (0.08 ~ 0.12 in.)	– – –
Idle speed	1 300 ± 50 r/min (rpm)	– – –
Throttle body vacuum:		
ZX636B	24 ± 1.3 kPa (180 ± 10 mmHg)	– – –
ZX600K	22 ± 1.3 kPa (165 ± 10 mmHg)	– – –
	at Idle Speed	
Air cleaner element	Viscous paper element	– – –
Cooling System:		
Coolant:		
Type (recommended)	Permanent type antifreeze	– – –
Color	Green	– – –
Mixed ratio	Soft water 50%, Coolant 50%	– – –
Freezing point	–35°C (–31°F)	– – –
Total amount	2.4 L (2.5 US qt.)	– – –
Engine Top End:		
Valve clearance:		
Inlet	0.11 ~ 0.19 mm (0.004 ~ 0.008 in.)	– – –
Exhaust	0.22 ~ 0.31 mm (0.009 ~ 0.012 in.)	– – –
Clutch:		
Clutch lever free play	2 ~ 3 mm (0.08 ~ 0.12 in.)	– – –
Engine Lubrication System:		
Engine oil:		
Type	API SE, SF or SG	– – –
	API SH or SJ with JASO MA	
Viscosity	SAE 10W-40	– – –
Capacity	3.4 L (3.6 US qt) (when filter is not removed)	– – –
	3.6 L (3.8 US qt) (when filter is removed)	– – –
	4.0 L (4.2 US qt) (when engine is completely dry)	– – –
Level	Between upper and lower level lines (Wait 2 ~ 3 minutes after idling or running)	– – –
Tires:		
Tread depth:		
Front BRIDGESTONE	3.8 mm (0.15 in.)	1 mm (0.04 in.) (DE, AT, CH) 1.6 mm (0.06 in.)
Front MICHELIN	3.8 mm (0.15 in.)	
Rear BRIDGESTONE	5.8 mm (0.23 in.)	Up to 130 km/h (80 mph): 2 mm (0.08 in.) Over 130 km/h (80 mph): 3 mm (0.12 in.)
Rear MICHELIN	5.6 mm (0.22 in.)	

Specifications

Item	Standard	Service Limit
Air pressure: (when cold)		
Front	Up to 180 kg (397 lb) load: 250 kPa (2.5 kgf/cm², 36 psi)	– – –
Rear	Up to 180 kg (397 lb) load: 290 kPa (2.9 kgf/cm², 42 psi)	– – –
Final Drive:		
Drive chain slack	25 ~ 30 mm (1.0 ~ 1.2 in.)	– – –
Drive chain wear (20-link length)	317.5 ~ 318.2 mm (12.50 ~ 12.53 in.)	323 mm (12.7 in.)
Brakes:		
Brake fluid:		
Grade	DOT4	– – –
Brake pad lining thickness:		
Front	4.0 mm (0.16 in.)	1 mm (0.04 in.)
Rear	5 mm (0.20 in.)	1 mm (0.04 in.)
Brake light timing:		
Front	Pulled ON	– – –
Rear	On after about 10 mm (0.39 in.) of pedal travel	– – –
Electrical System:		
Spark plug gap	0.7 ~ 0.8 mm (0.028 ~ 0.031 in.)	– – –

AT: Austria
CH: Switzerland
DE: Germany
US: United States

Special Tools

Steering Stem Nut Wrench:
57001–1100

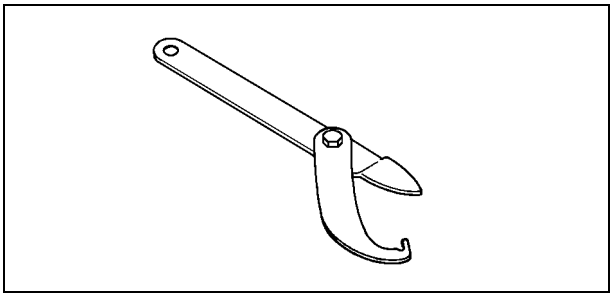

Jack:
57001–1238

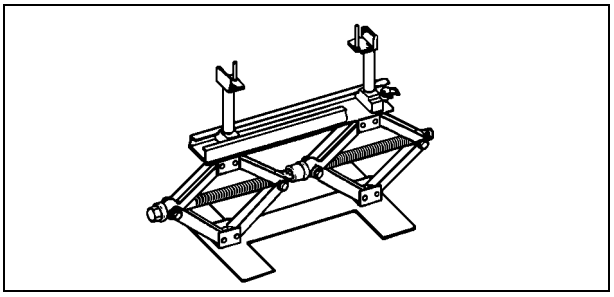

Oil Filter Wrench:
57001–1249

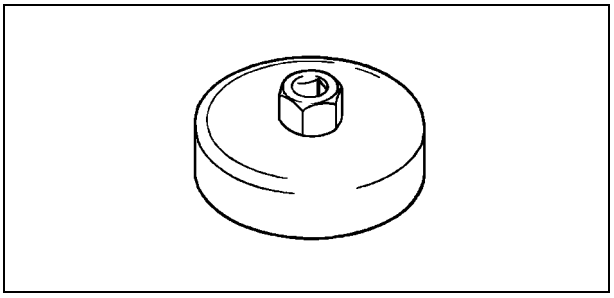

Pilot Screw Adjuster, C:
57001–1292

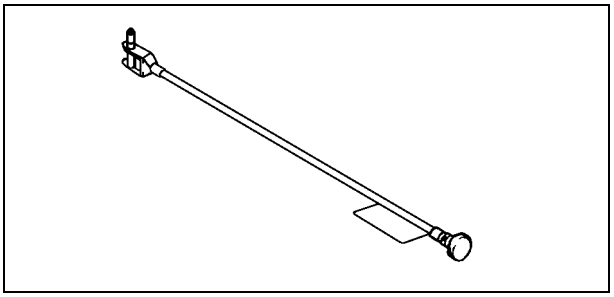

Lead Wire-Peak Voltage Adapter:
57001–1449

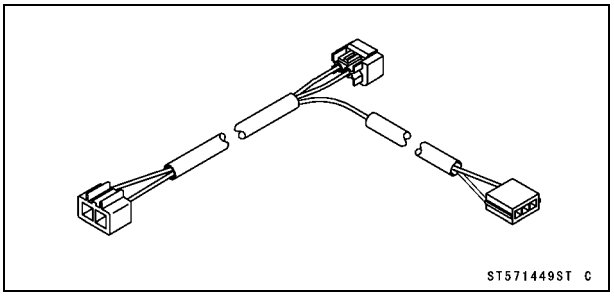

Fuel System (DFI)

Fuel Hose and Connection Inspection

○The fuel hose [A] is designed to be used throughout the motorcycle's life without any maintenance. However, if the motorcycle is not properly handled, the high pressure inside the fuel line can cause fuel to leak or the hose to burst. Remove the fuel tank (see Fuel System (DFI) chapter) and check the fuel hose.

★Replace the fuel hose if any fraying, cracks [B] or bulges [C] are noticed.

- Check that the hose joints are securely connected.
- When installing the fuel hose, avoid sharp bending, kinking, flattening or twisting.

★Replace the hose if it has been sharply bent or kinked.

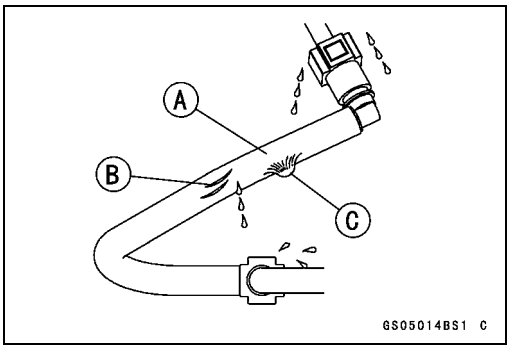

Throttle Control System Inspection

Free Play Inspection

- Check the throttle grip free play [A].

★If the free play is incorrect, adjust the throttle cables.

Throttle Grip Free Play
Standard: 2 ~ 3 mm (0.08 ~ 0.12 in)

- Check that the throttle grip [B] moves smoothly from full open to close, and the throttle closes quickly and completely by the return spring in all steering positions.

★If the throttle grip does not return properly, check the throttle cables routing, grip free play, and cable damage. Then lubricate the throttle cable.

- Run the engine at the idle speed, and turn the handlebar all the way to the right and left to ensure that the idle speed does not change.

★If the idle speed increases, check the throttle cable free play and the cable routing.

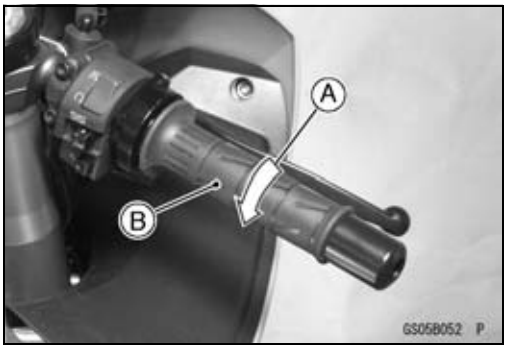

Free Play Adjustment

- Loosen the locknuts [A] [B].
- Screw both throttle cable adjusters [C] [D] to give the throttle grip plenty of play.
- Turn out the decelerator cable adjuster [C] until there is no play when the throttle grip is completely closed.
- Tighten the locknut [A].

★Turn the accelerator cable adjuster [D] until 2 ~ 3 mm (0.08 ~ 0.12 in.) of throttle grip play is obtained.

- Tighten the locknut [B]

★If the free paly cannot be adjusted with the adjusters, replace the cable.

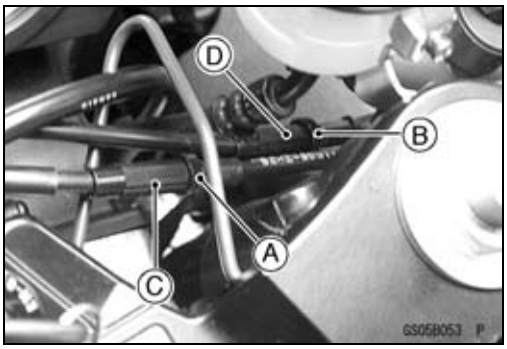

Maintenance Procedure

Throttle Bore Cleaning

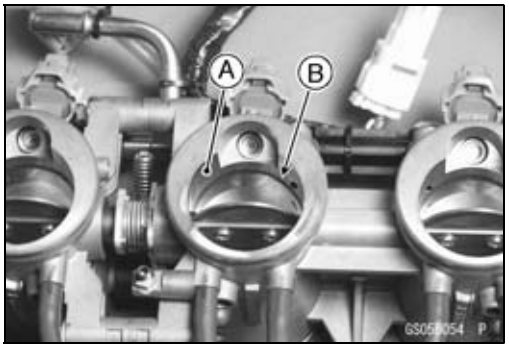

- Check the throttle bore for cleanliness as follows:

○Remove:
Throttle Body (see Fuel System (DFI) chapter)

○Check the main throttle valves and throttle bores [A] for carbon deposits by opening the main throttle valves.

★If any carbon accumulates, wipe the carbon off the throttle bores around the throttle bores and the throttle valves, using a cotton pad penetrated with a high-flash point solvent. Be careful not to remove molybdenum disulfide coat (black) [B] from the throttle valves and the bores.

CAUTION

Do not rub these surfaces hard and do not use a carburetor cleaning solution, which damage molybdenum disulfide coat; instead, use a high-flash point cleaning solution and wipe slowly.

Idle Speed Inspection

- Start the engine and warm it up thoroughly.
- With the engine idling, turn the handlebar to both sides [A].

★If handlebar movement changes the idle speed, the throttle cables may be improperly adjusted or incorrectly routed, or damaged. Be sure to correct any of these conditions before riding (see Cable Routing Section in Appendix chapter).

⚠ WARNING

Operation with improperly adjusted, incorrectly routed, or damaged cables could result in an unsafe riding condition.

- Check the idle speed.

★If the idle speed is out of specified range, adjust it.

Idle Speed
Standard: 1 300 ± 50 r/min (rpm)

Idle Speed Adjustment

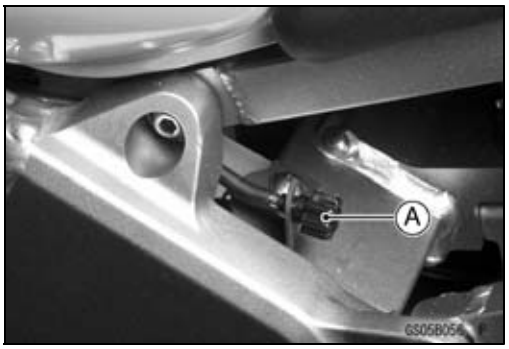

- Start the engine and warm it up thoroughly.
- Turn the adjusting screw [A] until the idle speed is correct.

○Open and close the throttle a few times to make sure that the idle speed is within the specified range. Readjust if necessary.

Maintenance Procedure

Engine Vacuum Synchronization Inspection

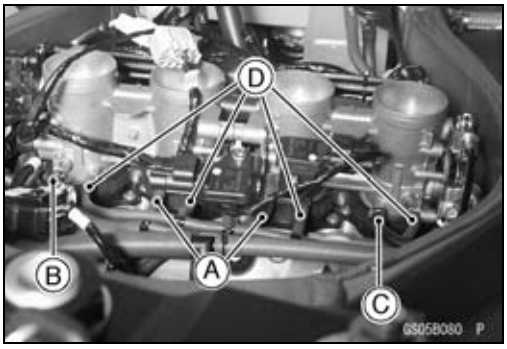

NOTE

○*These procedures are explained on the assumption that the inlet and exhaust systems of the engine are in good condition.*

- Situate the motorcycle so that it is vertical.
- Remove:
  Air Cleaner Housing (see Fuel System (DFI) chapter)
- Pull off the vacuum hoses [A] and the rubber cap [B] from the right fittings of each throttle body.
- For California model, pull off the vacuum hose [C].

CAUTION
Do not remove the inlet air pressure sensor hoses [D] on the left fitting of each throttle body.

- Connect a commercially available vacuum gauge and hoses [A] to the fittings on the throttle body.

- Connect a highly accurate tachometer to one of the stick coil primary leads using the adapter [A].

  Special Tool - Lead Wire-Peak Voltage Adapter: 57001-1449

- Position the fuel tank so that the throttle bodies can be reached.

○Connect a commercially available fuel hose [A] and a fuel pump lead connector [B].

○Secure the fuel hose with clamps.

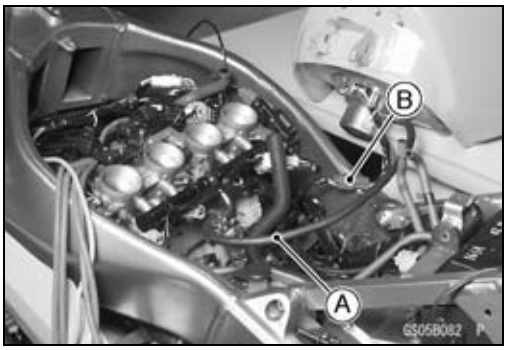

Maintenance Procedure

- Plug:
  Vacuum Switch Valve Hose [A] and its Air Cleaner Housing
  Hole [B]
  Removed Vacuum Hoses

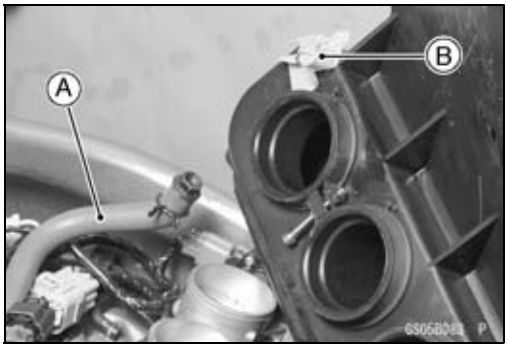

- Install the air cleaner housing [A].
- Start the engine and warm it up thoroughly.
- Check the idle speed.

★If the idle speed is out of the specified range, adjust it.
[B] Tachometer

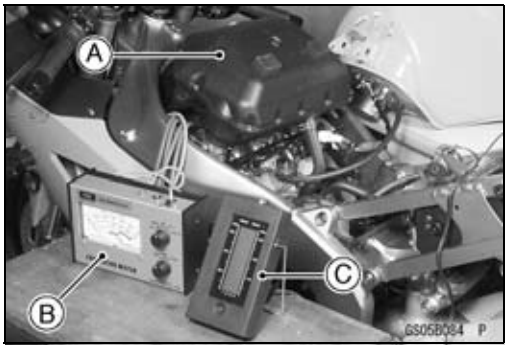

CAUTION
Do not measure the idle speed by the tachometer of the meter unit.

- While idling the engine, inspect the engine vacuum, using the vacuum gauge [C].

Engine Vacuum
Standard:

ZX636B : 24 ± 1.3 kPa (180 ± 10 mmHg)

ZX600K : 22 ± 1.3 kPa (165 ± 10 mmHg)

at Idle Speed 1 300 ± 50 r/min (rpm)

★If any one vacuum measurement is not within specifications, first synchronize the #1 and #2 throttle valves to #3 and #4 throttle valves by using the center adjusting screw [A].

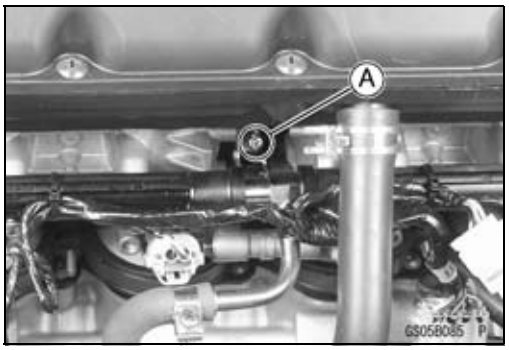

Example:

#1: 170 mmHg
#2: 200 mmHg
#3: 165 mmHg
#4: 190 mmHg

- With the engine at the correct idle speed, equalize the highest vacuum of 1 and 2 (example 200 mmHg) to the highest vacuum of 3 and 4 (example 190 mmHg) by turning the center adjusting screw [A].

NOTE

○*After adjustment, the final vacuum measurement between the highest throttle valves may not be 200 mmHg (in this example). The goal is to have the highest two vacuums between the left (1 and 2) and right (3 and 4) banks be the same and be within the service limits.*

- Open and close the throttle after each measurement and adjust the idle speed as necessary.
- Once the throttle valves have been synchronized, inspect the main throttle sensor's output voltage to ensure proper operation (procedure is at the end of this section).

Maintenance Procedure

★If any one vacuum measurement is out of the standard measurement after synchronization, adjust the bypass screws [A].

Special Tool - Pilot Screw Adjuster, C: 57001-1292

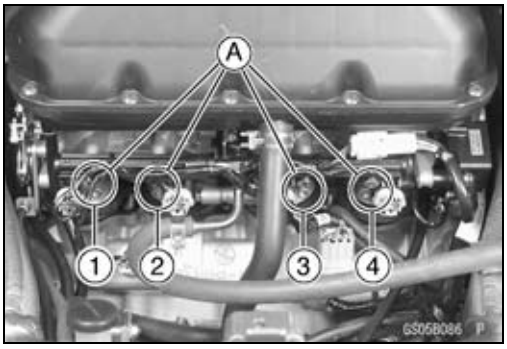

- Adjust the lowest vacuum between #1 and #2 to the highest of 1 and 2.
- Adjust the lowest vacuum between #3 and #4 to the highest of 3 and 4.
- Open and close the throttle valves after every measurement and adjust the idle speed as necessary.
- Inspect the vacuums as before.

★If all vacuums are within the specification, finish the engine vacuum synchronization.

★If any vacuum cannot be adjusted within the specification, remove the bypass screws #1 ~ #4 and clean them.

- Turn in the bypass screw [A] and count the number of turns until it seals fully but not tightly. Record the number of turns.

Torque - Bypass Screw: 0.2 N·m (0.02 kgf·m, 1.7 in·lb)

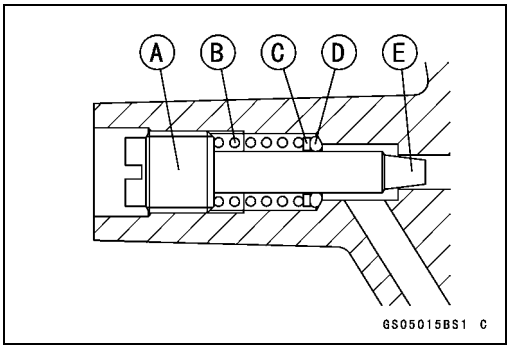

CAUTION
Do not over tighten them. They could be damaged, requiring replacement.

- Remove:
  Bypass Screw
  Spring [B]
  Washer [C]
  O-ring [D]
- Check the bypass screw and its hole for carbon deposits.

★If any carbon accumulates, wipe the carbon off the bypass screw and the hole, using a cotton bud penetrated with a high-flash point solvent.

- Replace the O-ring with a new one.
- Check the tapered portion [E] of the bypass screw for wear or damage.

★If the bypass screw is worn or damaged, replace it.

- Turn in the bypass screw until it seats fully but not tightly.

Torque - Bypass Screw: 0.2 N·m (0.02 kgf·m, 1.7 in·lb)

Maintenance Procedure

- Back out the same number of turns counted when first turned in. This is to set the screw to its original position.

NOTE

○*A throttle body has different "turns out" of the bypass screw for each individual unit. When setting the bypass screw, use the "turns out" determined during disassembly. Use the specifications in this manual only if the original number is unknown.*

- Repeat the same procedure for other bypass screws.
- Repeat the synchronization.

★If the vacuums are correct, check the output voltage of the main throttle sensor (see Output Voltage Inspection of Main Throttle Sensor in the Fuel System (DFI) chapter).

Main Throttle Sensor Output Voltage
Connections to ECU
Meter (+) → Y/W lead (terminal 2)
Meter (–) → BR/BK lead (terminal 14)
Standard:
1.02 ~ 1.06 V DC (at idle throttle opening)

★If the output voltage is out of the range, check the throttle input voltage (see Input Voltage Inspection of Main Throttle Sensor in the Fuel System (DFI) chapter).

- Remove the vacuum gauge hoses and install the vacuum hoses and rubber caps on the original position as shown.
  Vacuum Switch Valve Vacuum Hoses [A]
  Rubber Cap [B]
  Vacuum Hose [C] (California model) or Rubber Cap (except California model)

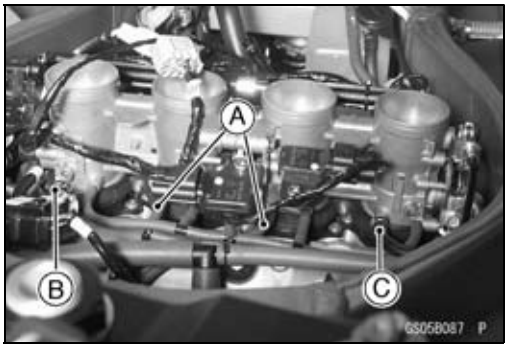

Air Cleaner Element Replacement

⚠ WARNING

If dirt or dust is allowed to pass through into the throttle assy, the throttle may become stuck, possibly causing an accident.

CAUTION

If dirt gets through into the engine, excessive engine wear and possibly engine damage will occur.

Maintenance Procedure

- Remove:
  Seats (see Frame chapter)
  Fuel Tank (see Fuel System (DFI) chapter)
  Inlet Air Temperature Sensor Connector [A]
  Air Cleaner Cover Screws [B]
  Air Cleaner Cover [C]
- Discard:
  Air Cleaner Element

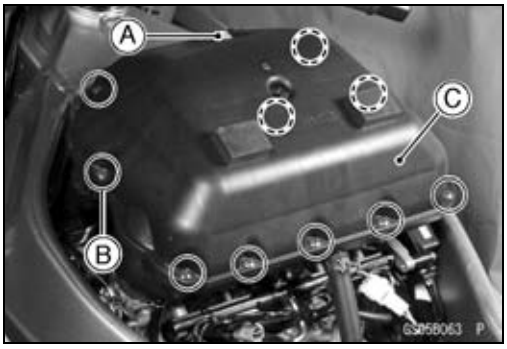

- Install a new element [A] with the mesh side facing upward.

CAUTION

Use only the recommended air cleaner element (Kawasaki part number 11013–1301). Using another air cleaner element will wear the engine prematurely or lower the engine performance.

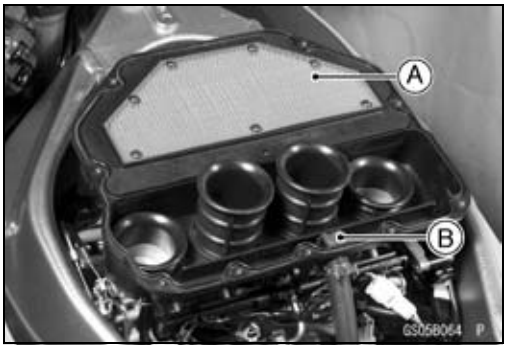

- Clean the filter [B] in cleaning solvent, and then dry it with compressed air or by shaking it.

Evaporative Emission Control System Inspection (California model)

- Inspect the canister as follows.

○Remove:
  Left Lower Fairing (see Frame chapter)
○Remove the canister [A], and disconnect the hoses from the canister.
○Visually inspect the canister for cracks or other damage.
★If the canister has any cracks or bad damage, replace it with a new one.

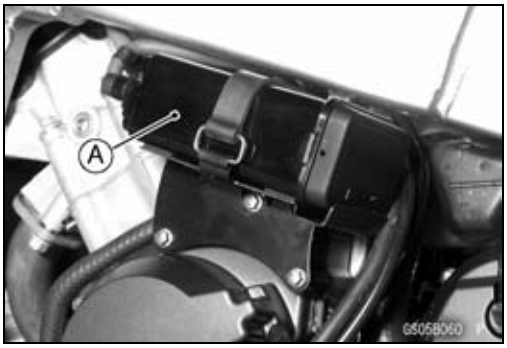

NOTE

○*The canister is designed to work well through the motorcycle's life without any maintenance if it is used under normal conditions.*

Maintenance Procedure

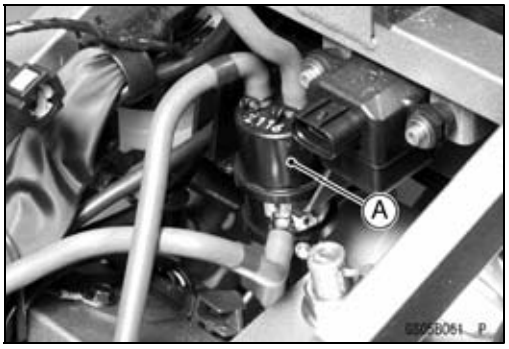

- Check the liquid/vapor separator as follows:

○Remove:
Seats (see Frame chapter)

○Disconnect the hoses from the separator, and remove the separator [A] from the motorcycle right side.

○Visually inspect the separator for cracks and other damage.

★If the separator has any cracks or damage, replace it with a new one.

○To prevent the gasoline from flowing into or out of the canister, hold the separator perpendicular to the ground.

- Check the hoses of the evaporative emission control system as follows:

○Check that the hoses are securely connected and clips are in position.

○Replace any kinked, deteriorated or damaged hoses.

○Route the hoses according to Cable, Wire, and Hose Routing section in the Appendix chapter. Refer to the diagram of the evaporative emission control system in the Fuel System (DFI) chapter too.

○When installing the hoses, avoid sharp bending, kinking, flattening or twisting, and route the hoses with a minimum of bending so that the emission flow will not be obstructed.

Cooling System

Cooling Hose and Connection Inspection

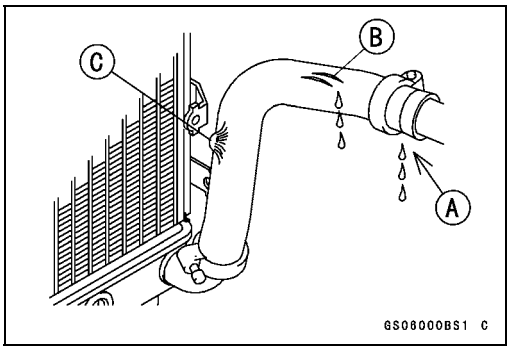

○The high pressure inside the radiator hose can cause coolant to leak [A] or the hose to burst if the line is not properly maintained. Visually inspect the hoses for signs of deterioration. Squeeze the hoses. A hose should not be hard and brittle, nor should it be soft or swollen.

★Replace the hose if any fraying, cracks [B] or bulges [C] are noticed.

- Check that the hoses are securely connected and clamps are tightened correctly.

Torque - Radiator Hose Clamp Screws: 2.5 N·m (0.25 kgf·m, 22 in·lb)

Coolant Change

⚠ WARNING

To avoid burns, do not remove the radiator cap or try to change the coolant when the engine is still hot. Wait until it cools down. Coolant on tires will make them slippery and can cause an accident and injury. Immediately wipe up or wash away any coolant that spills on the frame, engine, or other painted parts.
Since coolant is harmful to the human body, do not use for drinking.

Maintenance Procedure

- Remove:
  Right Inner Cover (see Frame chapter)
  Radiator Cap [A]

○Remove the radiator cap in two steps. First turn the cap counterclockwise to the first stop. Then push and turn it further in the same direction and remove the cap.

- Remove:
  Left Lower Fairing (see Frame chapter)
- Place a containers under the drain plugs [A] and [B] at the bottom of the water pump cover and cylinder.
- Drain the coolant from the radiator and engine by removing the drain plugs.

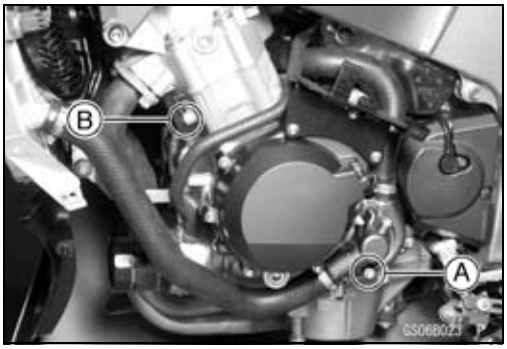

- Remove:
  Coolant Reserve Tank [A] (see Cooling System chapter)
- Remove the cap [B] and pour the coolant into a container.

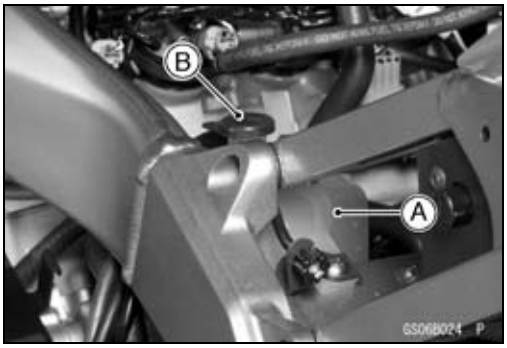

- Install the reserve tank (see Cooling System chapter).
- Tighten the drain plugs with the washers.

○Replace the drain plug gasket with a new one if it is damaged.

Torque - Coolant Drain Plug (Water Pump): 12 N·m (1.2 kgf·m, 106 in·lb)
Coolant Drain Plug (Cylinder): 10 N·m (1.0 kgf·m, 89 in·lb)

- Fill the radiator up to the radiator filler neck [A] with coolant, and install the radiator cap.

NOTE

○*Pour in the coolant slowly so that it can expel the air from the engine and radiator.*

- Fill the reserve tank up to the full level line with coolant, and install the cap.

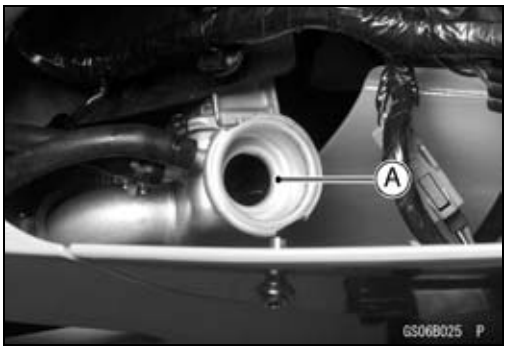

CAUTION

Soft or distilled water must be used with the antifreeze (see below for antifreeze) in the cooling system.
If hard water is used in the system, it causes scales accumulation in the water passages, and considerably reduces the efficiency of the cooling system.

Maintenance Procedure

Water and Coolant Mixture Ratio (Recommended)

Soft Water:	**50 %**
Coolant:	**50 %**
Freezing Point:	**– 35°C (– 31°F)**
Total Amount:	**2.4 L (2.5 US qt)**

NOTE

○*Choose a suitable mixture ratio by referring to the coolant manufacturer's directions.*

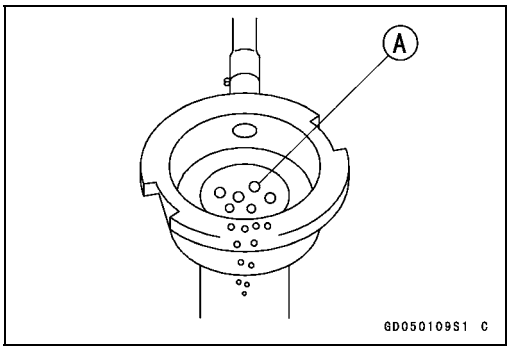

- Bleed the air from the cooling system as follows.

○Start the engine with the radiator cap removed and run it until no more air bubbles [A] can be seen in the coolant.

○Tap the radiator hoses to force any air bubbles caught inside.

○Stop the engine and add coolant up to the radiator filler neck.

- Install the radiator cap.
- Start the engine, warm it up thoroughly until the radiator fan turns on and then stop the engine.
- Check the coolant level in the reserve tank after the engine cools down.

★If the coolant level is lower than the low level line, add coolant to the full level line.

CAUTION
Do not add more coolant above the full level line.

Engine Top End

Air Suction Valve Check

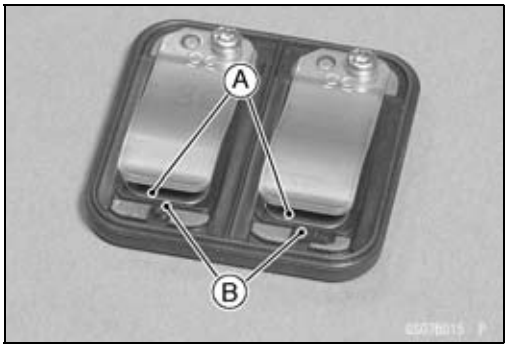

- Remove the air suction valve (see Engine Top End chapter).
- Visually inspect the reeds [A] for cracks, folds, warps, heat damage, or other damage.

★If there is any doubt as to the condition of the reed, replace the air suction valve as an assembly.

- Check the reed contact areas [B] of the valve holder for grooves, scratches, any signs of separation from the holder, or heat damage.

★If there is any doubt as to the condition of the reed contact areas, replace the air suction valve as an assembly.

- If any carbon or other foreign particles have accumulated between the reed and the reed contact area, wash the valve assembly with a high flash-point solvent.

CAUTION
Do not scrape off the deposits with a scraper as this could damage the rubber, requiring replacement of the suction valve assembly.

Maintenance Procedure

Valve Clearance Check

Valve Clearance Inspection

NOTE

○*Valve clearance must be checked and adjusted when the engine is cold (at room temperature).*

● Remove:
Lower Fairings (see Frame chapter)
Pickup Coil Cover

Cylinder Head Cover (see Engine Top End chapter)

● Position the crankshaft at 1,4 piston TDC.
TDC Mark [A] for #1, 4 Pistons
Timing Mark [B] (crankcase halves mating surface)

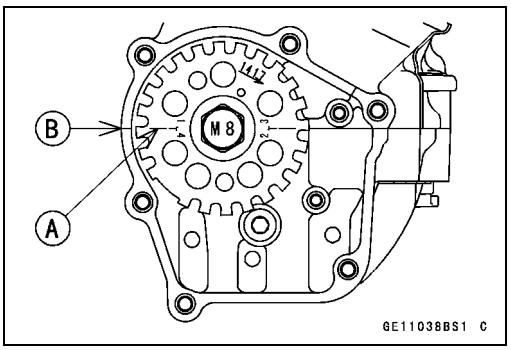

● Using a thickness gauge [A], measure the valve clearance between the cam and the valve lifter.

Valve Clearance

Standard:	**IN:**	**0.11~ 0.19 mm (0.004 ~ 0.008 in.)**
	EX:	**0.22 ~ 0.31 mm (0.009 ~ 0.012 in.)**

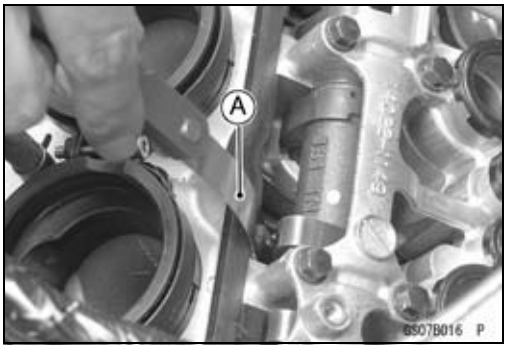

○**When positioning #4 piston TDC at the end of the compression stroke:**
Inlet valve clearance of #2 and #4 cylinders
Exhaust valve clearance of #3 and #4 cylinders
Measuring Valve [A]

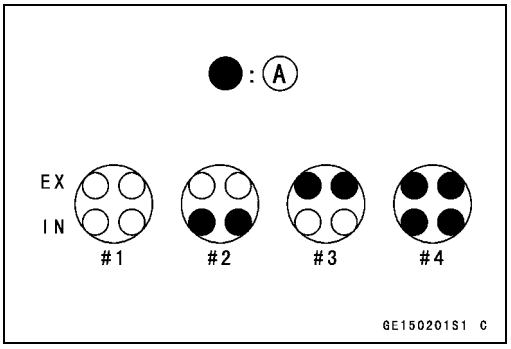

○**When positioning #1 piston TDC at the end of the compression stroke:**
Inlet valve clearance of #1 and #3 cylinders
Exhaust valve clearance of #1 and #2 cylinders
Measuring Valve [A]

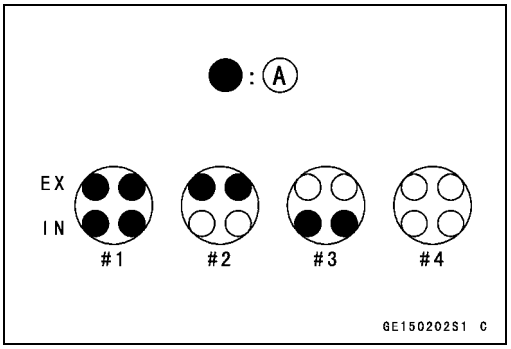

★If the valve clearance is not within the specified range, first record the clearance, and then adjust it.

Maintenance Procedure

Valve Clearance Adjustment

- To change the valve clearance, remove the camshaft chain tensioner, camshafts and valve lifters. Replace the shim with one of a different thickness.

NOTE

○*Mark and record the valve lifter and shim locations so they can be reinstalled in their original positions.*

○*If there is no clearance, select a shim which is several sizes smaller and then measure the clearance.*

- To select a new shim which brings the valve clearance within the specified range, refer to the Valve Clearance Adjustment Charts.
- Apply a thin coat of molybdenum disulfide grease to the valve lifters.
- Install the camshafts. Be sure to time the camshafts properly (see Engine Top End chapter).
- Remeasure any valve clearance that was adjusted. Readjust if necessary.

CAUTION

Do not put shim stock under the shim. This may cause the shim to pop out at high rpm, causing extensive engine damage.
Do not grind the shim. This may cause it to fracture, causing extensive engine damage.

Maintenance Procedure

VALVE CLEARANCE ADJUSTMENT CHART INLET VALVE

	PRESENT SHIM (Example)																				
PART No. (92180 -)	1014	1016	1018	1020	1022	1024	1026	1028	1030	1032	1034	1036	1038	1040	1042	1044	1046	1048	1050	1052	1054
MARK	50	55	60	65	70	75	80	85	90	95	00	05	10	15	20	25	30	35	40	45	50
THICKNESS (mm)	2.50	2.55	2.60	2.65	2.70	2.75	2.80	2.85	2.90	2.95	3.00	3.05	3.10	3.15	3.20	3.25	3.30	3.35	3.40	3.45	3.50

VALVE CLEARANCE MEASUREMENT (Example)																					
0.00 ~ 0.05			2.50	2.55	2.60	2.65	2.70	2.75	2.80	2.85	2.90	2.95	3.00	3.05	3.10	3.15	3.20	3.25	3.30	3.35	3.40
0.06 ~ 0.10		2.50	2.55	2.60	2.65	2.70	2.75	2.80	2.85	2.90	2.95	3.00	3.05	3.10	3.15	3.20	3.25	3.30	3.35	3.40	3.45
0.11 ~ 0.19	SPECIFIED CLEARANCE/NO CHANGE REQUIRED																				
0.20 ~ 0.24	2.55	2.60	2.65	2.70	2.75	2.80	2.85	2.90	2.95	3.00	3.05	3.10	3.15	3.20	3.25	3.30	3.35	3.40	3.45	3.50	
0.25 ~ 0.29	2.60	2.65	2.70	2.75	2.80	2.85	2.90	2.95	3.00	3.05	3.10	3.15	3.20	3.25	3.30	3.35	3.40	3.45	3.50		
0.30 ~ 0.34	2.65	2.70	2.75	2.80	2.85	2.90	2.95	3.00	3.05	3.10	3.15	3.20	3.25	3.30	3.35	3.40	3.45	3.50			
0.35 ~ 0.39	2.70	2.75	2.80	2.85	2.90	2.95	3.00	3.05	3.10	3.15	3.20	3.25	3.30	3.35	3.40	3.45	3.50				
0.40 ~ 0.44	2.75	2.80	2.85	2.90	2.95	3.00	3.05	3.10	3.15	3.20	3.25	3.30	3.35	3.40	3.45	3.50					
0.45 ~ 0.49	2.80	2.85	2.90	2.95	3.00	3.05	3.10	3.15	3.20	3.25	3.30	3.35	3.40	3.45	3.50						
0.50 ~ 0.54	2.85	2.90	2.95	3.00	3.05	3.10	3.15	3.20	3.25	3.30	3.35	3.40	3.45	3.50							
0.55 ~ 0.59	2.90	2.95	3.00	3.05	3.10	3.15	3.20	3.25	3.30	3.35	3.40	3.45	3.50								
0.60 ~ 0.64	2.95	3.00	3.05	3.10	3.15	3.20	3.25	3.30	3.35	3.40	3.45	3.50									
0.65 ~ 0.69	3.00	3.05	3.10	3.15	3.20	3.25	3.30	3.35	3.40	3.45	3.50										
0.70 ~ 0.74	3.05	3.10	3.15	3.20	3.25	3.30	3.35	3.40	3.45	3.50											
0.75 ~ 0.79	3.10	3.15	3.20	3.25	3.30	3.35	3.40	3.45	3.50												
0.80 ~ 0.84	3.15	3.20	3.25	3.30	3.35	3.40	3.45	3.50													
0.85 ~ 0.89	3.20	3.25	3.30	3.35	3.40	3.45	3.50														
0.90 ~ 0.94	3.25	3.30	3.35	3.40	3.45	3.50															
0.95 ~ 0.99	3.30	3.35	3.40	3.45	3.50																
1.00 ~ 1.04	3.35	3.40	3.45	3.50																	
1.05 ~ 1.09	3.40	3.45	3.50																		
1.10 ~ 1.14	3.45	3.50																			
1.15 ~ 1.19	3.50																				

INSTALL THE SHIM OF THIS THICKNESS (mm)

1. Measure the clearance (when engine is cold).
2. Check present shim size.
3. Match clearance in vertical column with present shim size in horizontal column.
4. Install the shim specified where the lines intersect. This shim will give the proper clearance.

   Example: Present shim is **3.05 mm**
   Measured clearance is **0.35 mm**
   Replace **3.05 mm** shim with **3.25 mm** shim.

5. Remeasure the valve clearance and readjust if necessary.

Maintenance Procedure

VALVE CLEARANCE ADJUSTMENT CHART EXHAUST VALVE

	PRESENT SHIM (Example)																				
PART No. (92180 -)	1014	1016	1018	1020	1022	1024	1026	1028	1030	1032	1034	1036	1038	1040	1042	1044	1046	1048	1050	1052	1054
MARK	50	55	60	65	70	75	80	85	90	95	00	05	10	15	20	25	30	35	40	45	50
THICKNESS (mm)	2.50	2.55	2.60	2.65	2.70	2.75	2.80	2.85	2.90	2.95	3.00	3.05	3.10	3.15	3.20	3.25	3.30	3.35	3.40	3.45	3.50

VALVE CLEARANCE MEASUREMENT (Example)	1014	1016	1018	1020	1022	1024	1026	1028	1030	1032	1034	1036	1038	1040	1042	1044	1046	1048	1050	1052	1054
0.00 ~ 0.02						2.50	2.55	2.60	2.65	2.70	2.75	2.80	2.85	2.90	2.95	3.00	3.05	3.10	3.15	3.20	3.25
0.03 ~ 0.06					2.50	2.55	2.60	2.65	2.70	2.75	2.80	2.85	2.90	2.95	3.00	3.05	3.10	3.15	3.20	3.25	3.30
0.07 ~ 0.11				2.50	2.55	2.60	2.65	2.70	2.75	2.80	2.85	2.90	2.95	3.00	3.05	3.10	3.15	3.20	3.25	3.30	3.35
0.12 ~ 0.16			2.50	2.55	2.60	2.65	2.70	2.75	2.80	2.85	2.90	2.95	3.00	3.05	3.10	3.15	3.20	3.25	3.30	3.35	3.40
0.17 ~ 0.21		2.50	2.55	2.60	2.65	2.70	2.75	2.80	2.85	2.90	2.95	3.00	3.05	3.10	3.15	3.20	3.25	3.30	3.35	3.40	3.45
0.22 ~ 0.31	SPECIFIED CLEARANCE/NO CHANGE REQUIRED																				
0.32 ~ 0.36	2.55	2.60	2.65	2.70	2.75	2.80	2.85	2.90	2.95	3.00	3.05	3.10	3.15	3.20	3.25	3.30	3.35	3.40	3.45	3.50	
0.37 ~ 0.41	2.60	2.65	2.70	2.75	2.80	2.85	2.90	2.95	3.00	3.05	3.10	3.15	3.20	3.25	3.30	3.35	3.40	3.45	3.50		
0.42 ~ 0.46	2.65	2.70	2.75	2.80	2.85	2.90	2.95	3.00	3.05	3.10	3.15	3.20	3.25	3.30	3.35	3.40	3.45	3.50			
0.47 ~ 0.51	2.70	2.75	2.80	2.85	2.90	2.95	3.00	3.05	3.10	3.15	3.20	3.25	3.30	3.35	3.40	3.45	3.50				
0.52 ~ 0.56	2.75	2.80	2.85	2.90	2.95	3.00	3.05	3.10	3.15	3.20	3.25	3.30	3.35	3.40	3.45	3.50					
0.57 ~ 0.61	2.80	2.85	2.90	2.95	3.00	3.05	3.10	3.15	3.20	3.25	3.30	3.35	3.40	3.45	3.50						
0.62 ~ 0.66	2.85	2.90	2.95	3.00	3.05	3.10	3.15	3.20	3.25	3.30	3.35	3.40	3.45	3.50							
0.67 ~ 0.71	2.90	2.95	3.00	3.05	3.10	3.15	3.20	3.25	3.30	3.35	3.40	3.45	3.50								
0.72 ~ 0.76	2.95	3.00	3.05	3.10	3.15	3.20	3.25	3.30	3.35	3.40	3.45	3.50									
0.77 ~ 0.81	3.00	3.05	3.10	3.15	3.20	3.25	3.30	3.35	3.40	3.45	3.50										
0.82 ~ 0.86	3.05	3.10	3.15	3.20	3.25	3.30	3.35	3.40	3.45	3.50											
0.87 ~ 0.91	3.10	3.15	3.20	3.25	3.30	3.35	3.40	3.45	3.50												
0.92 ~ 0.96	3.15	3.20	3.25	3.30	3.35	3.40	3.45	3.50													
0.97 ~ 1.01	3.20	3.25	3.30	3.35	3.40	3.45	3.50														
1.02 ~ 1.06	3.25	3.30	3.35	3.40	3.45	3.50															
1.07 ~ 1.11	3.30	3.35	3.40	3.45	3.50																
1.12 ~ 1.16	3.35	3.40	3.45	3.50																	
1.17 ~ 1.21	3.40	3.45	3.50																		
1.22 ~ 1.26	3.45	3.50																			
1.27 ~ 1.31	3.50																				

INSTALL THE SHIM OF THIS THICKNESS (mm)

1. Measure the clearance (when engine is cold).
2. Check present shim size.
3. Match clearance in vertical column with present shim size in horizontal column.
4. Install the shim specified where the lines intersect. This shim will give the proper clearance.

   Example: Present shim is **3.10 mm.**
   Measured clearance is **0.40 mm.**
   Replace **3.10 mm** shim with **3.2 mm** shim.

5. Remeasure the valve clearance and readjust if necessary.

Clutch

Clutch Adjustment Check

Clutch Lever Free Play Inspection

- Pull the clutch lever just enough to take up the free play [A].
- Measure the gap between the lever and the lever holder.

★If the gap is too wide, the clutch may not release fully. If the gap is too narrow, the clutch may not engage fully. In either case, adjust it.

Clutch Lever Free Play
Standard: 2 ~ 3 mm (0.08 ~ 0.12 in.)

Clutch Lever Free Play Adjustment

⚠ WARNING

To avoid a serious burn, never touch the engine or exhaust pipe during clutch adjustment.

- Turn the adjuster [A] so that 5 ~ 6 mm (0.20 ~ 0.24 in.) [B] of threads are visible.

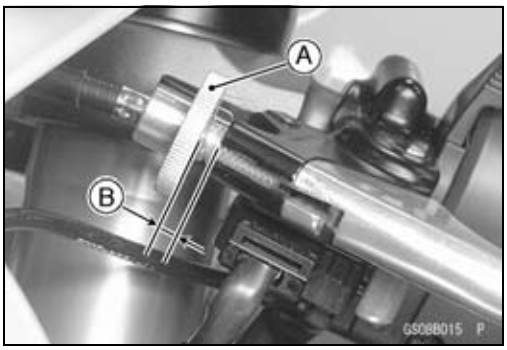

- Slide the dust cover [A] at the clutch cable lower end out of place.
- Loosen both adjusting nuts [B] at the clutch cover as far as they will go.
- Pull the clutch outer cable [C] tight and tighten the adjusting nuts against the bracket [D].
- Slip the rubber dust cover back onto place.
- Turn the adjuster at the clutch lever until the free play is correct.

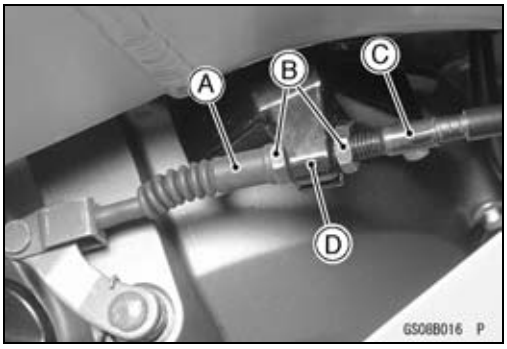

- Push the release lever [A] toward the front of the motorcycle until it becomes hard to turn.

○At this time, the release lever should have the proper angle shown.

★If the angle is wrong, check the clutch and release parts for wear.

⚠ WARNING

Be sure that the outer cable end at the clutch lever is fully seated in the adjuster at the clutch lever, or it could slip into place later, creating enough cable play to prevent clutch disengagement.

- After the adjustment, start the engine and check that the clutch does not slip and that it releases properly.

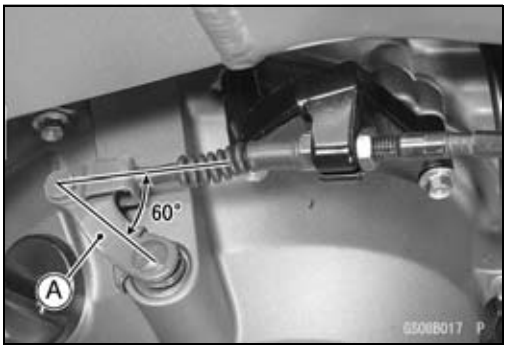

Maintenance Procedure

Engine Lubrication System

Engine Oil Change

- Situate the motorcycle so that it is vertical after warming up the engine.
- Remove the engine drain plug [A] to drain the oil.

○The oil in the oil filter can be drained by removing the filter (see Oil Filter Replacement).

★Replace the drain plug gasket [B] with a new one if it is damaged.

- Tighten the drain plug.

Torque - Engine Drain Plug: 29 N·m (3.0 kgf·m, 22 ft·lb)

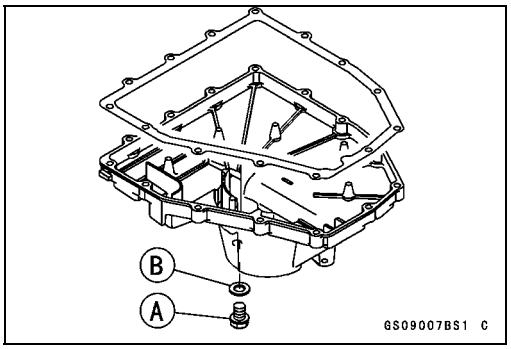

- Pour in the specified type and amount of oil.

Recommended Engine Oil

Type:	**API SE, SF or SG**
	API SH or SJ with JASO MA
Viscosity:	**SAE 10W40**
Capacity:	**3.4 L (3.6 US qt) (when filter is not removed)**
	3.6 L (3.8 US qt) (when filter is removed)
	4.0 L (4.2 US qt) (when engine is completely dry)

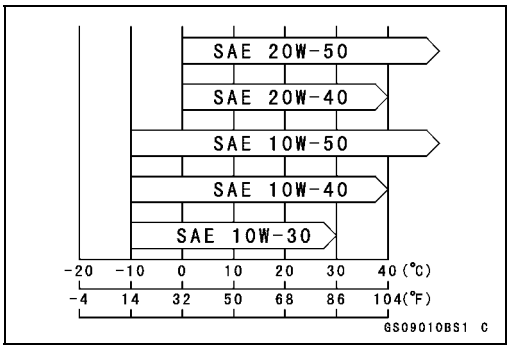

NOTE

○*Although 10W-40 engine oil is the recommended oil for most conditions, the oil viscosity may need to be changed to accommodate atmospheric conditions in your riding area.*

Oil Filter Replacement

- Drain the engine oil (see Engine Oil Change).
- Remove:
  Left Lower Fairing (see Frame chapter)
  Oil Filter Clamp
- Remove the oil filter [A] with the oil filter wrench [B].

Special Tool - Oil Filter Wrench: 57001-1249

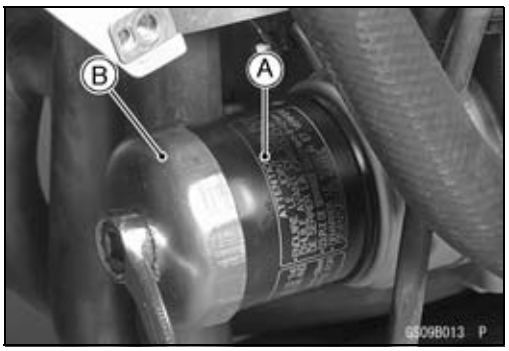

- Replace the filter with a new one.
- Apply engine oil to the gasket [A] before installation.
- Tighten the filter with the oil filter wrench.

Torque - Oil Filter: 31 N·m (3.2 kgf·m, 23 ft·lb)

NOTE

○*Hand tightening of the oil filter can not be allowed since it does not reach to this tightening torque.*

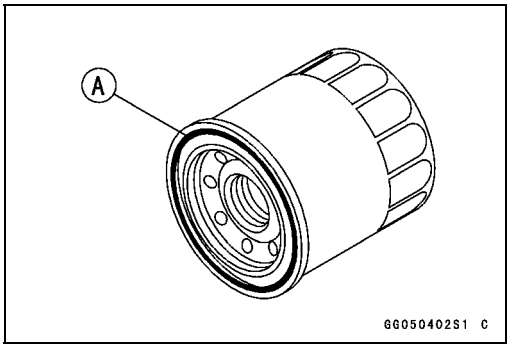

- Install the oil filter clamp so that projection [B] fits the slot [A] of oil cooler.

○Be sure to place the rubber tube on the projection.

- Tighten:

Torque - Oil Filter Clamp Bolt [C]: 5.9 N·m (0.60 kgf·m, 52 in·lb)

- Pour in the specified type and amount of oil (see Engine Oil Change).

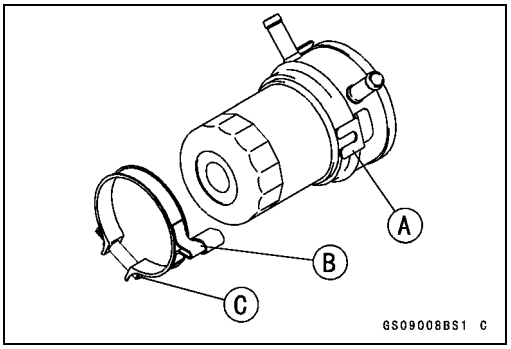

Wheels/Tires

Tire Wear Check

Tire Inspection

As the tire tread wears down, the tire becomes more susceptible to puncture and failure. An accepted estimate is that 90 % of all tire failures occur during the last 10 % of tread life (90 % worn). So it is false economy and unsafe to use the tires until they are bald.

- Remove any imbedded stones or other foreign particles from the tread.
- Visually inspect the tire for cracks and cuts, replacing the tire in case of damage. Swelling or high spots indicate internal damage, requiring tire replacement.
- Measure the tread depth at the center of the tread with a depth gauge [A]. Since the tire may wear unevenly, take measurement at several places.

★If any measurement is less than the service limit, replace the tire.

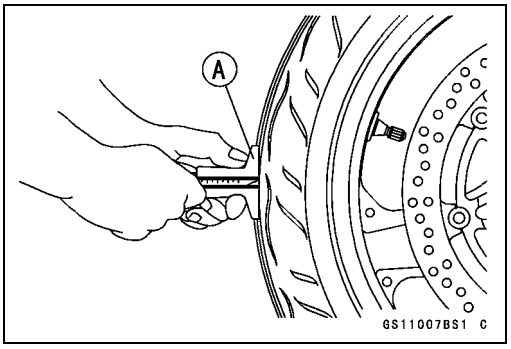

Tread Depth

Front:

Standard:	**3.8 mm (0.15 in.) (BRIDGESTONE),**
	3.8 mm (0.15 in.) (MICHELIN)
Service Limit:	**1 mm (0.04 in.),**
	(DE, AT, CH) 1.6 mm (0.06 in.)

Rear:

Standard:	**5.8 mm (0.23 in.) (BRIDGESTONE)**
	5.6 mm (0.22 in.) (MICHELIN)
Service Limit:	**2 mm (0.08 in.)**
	(Up to 130 km/h, 80 mph)
	3 mm (0.12 in.)
	(Over 130 km/h, 80 mph)

⚠ WARNING

To ensure safe handling and stability, use only the recommended standard tires for replacement, inflated to the standard pressure.

Maintenance Procedure

NOTE

○*Most countries may have their own regulations a minimum tire tread depth: be sure to follow them.*
○*Check and balance the wheel when a tire is replaced with a new one.*

Air Pressure Inspection/Adjustment

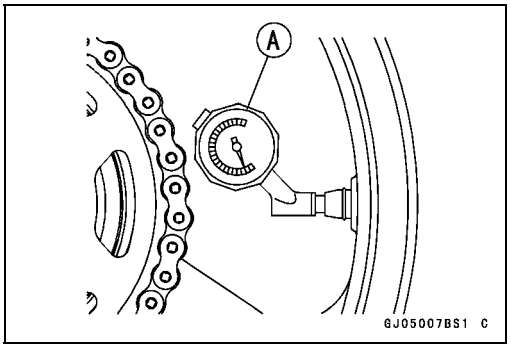

- Measure the tire air pressure with an air pressure gauge [A] when the tires are cold (that is, when the motorcycle has not been ridden more than a mile during the past 3 hours).
- Install the air valve cap.

★Adjust the tire air pressure according to the specifications if necessary.

Air Pressure (when cold)

Front	**Up to 180 kg (397 lb)**	**250 kPa (2.5 kgf/cm², 36 psi)**
Rear	**Up to 180 kg (397 lb)**	**290 kPa (2.9 kgf/cm², 42 psi)**

Final Drive

Drive Chain Wear Check

Drive Chain Slack Inspection

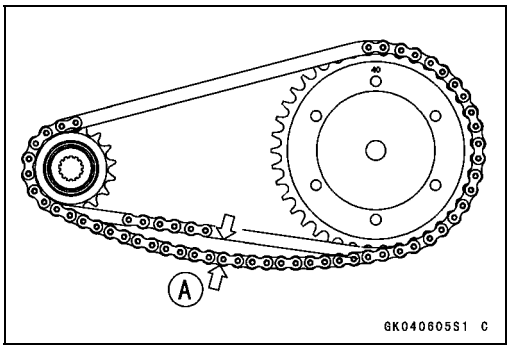

NOTE

○*Check the slack with the motorcycle setting on its side stand.*
○*Clean the chain if it is dirty, and lubricate it if it appears dry.*

- Check the wheel alignment (see Wheel Alignment Inspection).
- Rotate the rear wheel to find the position where the chain is tightest.
- Measure the vertical movement (chain slack) [A] midway between the sprockets.

★If the chain slack exceeds the standard, adjust it.

Chain Slack

Standard: 25 ~ 30 mm (1.0 ~ 1.2 in.)

Drive Chain Slack Adjustment

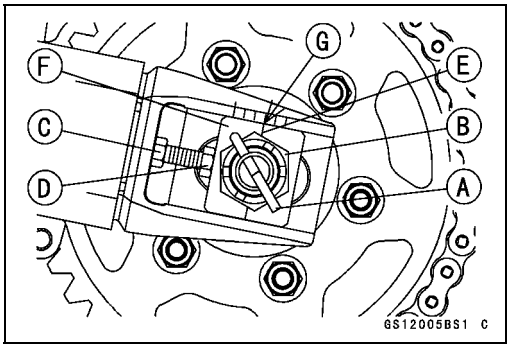

- Remove the cotter pin [A], and loosen the axle nut [B].
- Loosen the both chain adjuster locknuts [C].

★If the chain is too loose, turn out the left and right chain adjuster [D] evenly.

★If the chain is too tight, turn in the left and right chain adjusters evenly, and kick the wheel forward.

- Turn both chain adjusters evenly until the drive chain has the correct amount of slack. To keep the chain and wheel properly aligned, the notch [E] on the left wheel alignment indicator [F] should align with the same swingarm mark or position [G] that the right indicator notch aligns with.

Maintenance Procedure

⚠ WARNING

Misalignment of the wheel will result in abnormal wear and may result in an unsafe riding condition.

- Tighten both chain adjuster locknuts securely.
- Tighten the axle nut.

Torque - Rear Axle Nut: 127 N·m (13.0 kgf·m, 92 ft·lb)

- Turn the wheel, measure the chain slack again at the tightest position, and readjust if necessary.

- Insert a new cotter pin [A].

NOTE

○*When inserting the cotter pin, if the slots in the nut do not align with the cotter pin hole in hte axle, tighten the nut clockwise [B] up to next alignment.*
○*it should be within 30 degree.*
○*loosen once and tighten again when the slot goes past the nearest hole.*

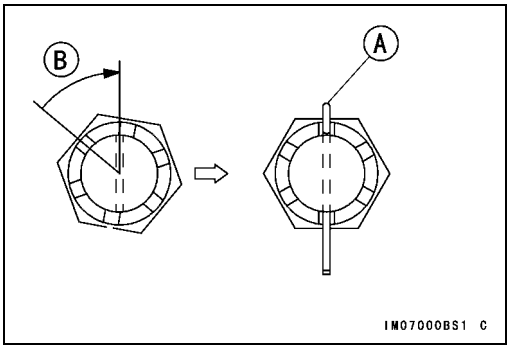

- Bend the cotter pin [A] over the nut [B].

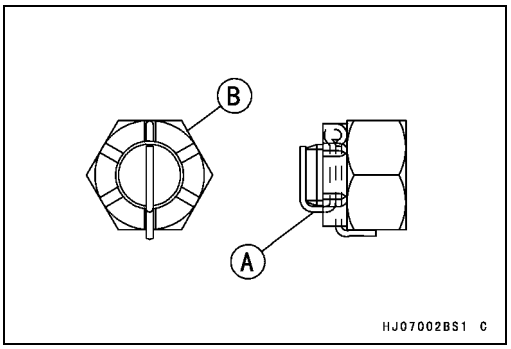

Wheel Alignment Inspection/Adjustment

- Check that the notch [A] on the left alignment indicator [B] aligns with the same swingarm mark or position [C] that the right alignment indicator notch aligns with.

★If they do not, adjust the chain slack and align the wheel alignment (see Drive Chain Slack Adjustment).

NOTE

○*Wheel alignment can be also checked using the straightedge or string method.*

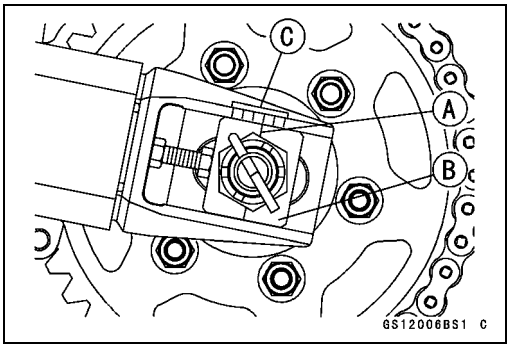

⚠ WARNING

Misalignment of the wheel will result in abnormal wear, and may result in an unsafe riding condition.

Maintenance Procedure

Drive Chain Wear Inspection

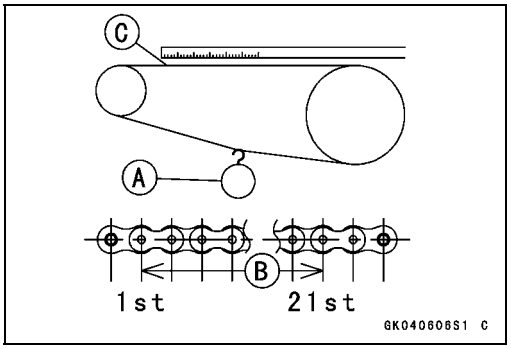

- Remove:
  Chain Cover
- Rotate the rear wheel to inspect the drive chain for damaged rollers, and loose pins and links.

★If there is any irregularity, replace the drive chain.

★Lubricate the drive chain if it appears dry.

- Stretch the chain taut by hanging a 98 N (10 kg, 20 lb) weight [A] on the chain.
- Measure the length of 20 links [B] on the straight part [C] of the chain from the pin center of the 1st pin to the pin center of the 21st pin. Since the chain may wear unevenly, take measurements at several places.

★If any measurements exceed the service limit, replace the chain. Also, replace the front and rear sprockets when the drive chain is replaced.

Drive Chain 20-link Length

Standard:	**317.5 ~ 318.2 mm (12.50 ~ 12.53 in.)**
Service Limit:	**323 mm (12.7 in.)**

⚠ WARNING

If the drive chain wear exceeds the service limit, replace the chain or an unsafe riding condition may result. A chain that breaks or jumps off the sprockets could snag on the engine sprocket or lock the rear wheel, severely damaging the motorcycle and causing it to go out of control.
For safety, use only the standard chain. It is an endless type and should not be cut for installation.

Standard Chain

Make:	**ENUMA**
Type:	**EK520MVXL**
Link:	**108 Links**

Maintenance Procedure

Drive Chain Lubrication

- If a special lubricant is not available, a heavy oil such as SAE 90 is preferred to a lighter oil because it will stay on the chain longer and provide better lubrication.
- If the chain appears especially dirty, clean it before lubrication.

CAUTION

The O-rings between the side plates seal in the lubricant between the pin and the bushing. To avoid damaging the O-rings and resultant loss of lubricant, observe the following rules.
Use only kerosene or diesel oil for cleaning of the O-ring of the drive chain.
Any other cleaning solution such as gasoline or trichloroethylene will cause deterioration and swelling of the O-ring.
Immediately blow the chain dry with compressed air after cleaning.
Complete cleaning and drying the chain within 10 minutes.

- Apply oil to the sides of the rollers so that oil will penetrate to the rollers and bushings. Apply the oil to the O-rings so that the O-rings will be coated with oil.
- Wipe off any excess oil.
  Oil Applied Areas [A]
  O-ring [B]

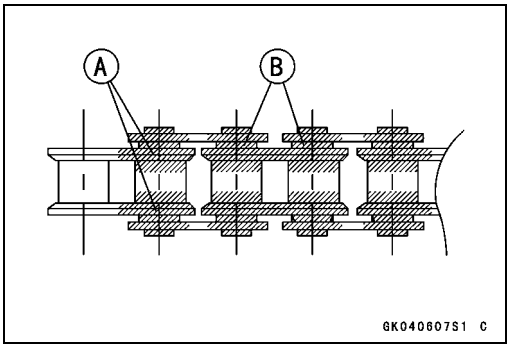

Brakes

Brake Pad Wear Check

- Remove the brake pads (see Brakes chapter).
- Check the lining thickness [A] of the pads in each caliper.

★If the lining thickness of either pad is less than the service limit [B], replace both pads in the caliper as a set.

Pad Lining Thickness

Standard:	**Front**	**4 mm (0.16 in)**
	Rear	**5 mm (0.20 in.)**
Service Limit:		**1 mm (0.04 in.)**

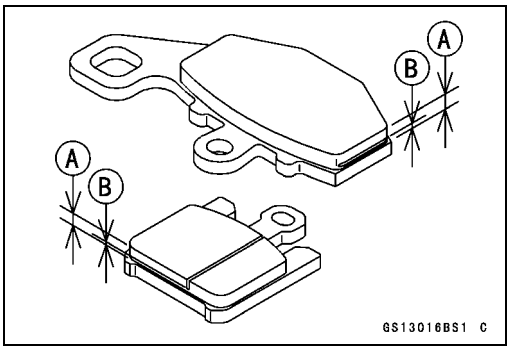

Brake Light Switch Check

Brake Light Timing Inspection

- Turn on the ignition switch.
- Check the operation of the rear brake light switch by depressing the brake pedal.

★If it does not as specified, adjust the brake light timing.

Brake Light Timing

Standard:	**On after about 10 mm (0.4 in.) of pedal travel [A]**

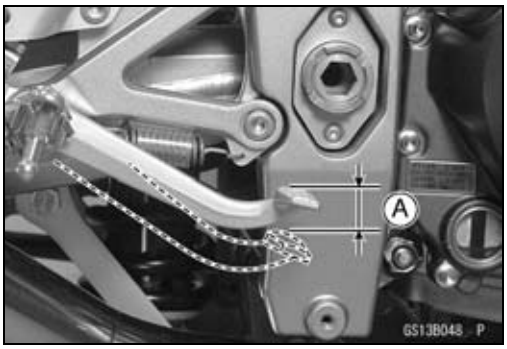

Maintenance Procedure

Brake Light Timing Adjustment

Brake light timing is adjusted by changing the position of the rear brake light switch.

- Adjust the position of the switch so that the brake light goes on after the specified pedal travel by turning the adjusting nut [A].

CAUTION

To avoid damaging the electrical connections inside the switch, be sure that the switch body does not turn during adjustment.

Caliper Piston Seal and Dust Seal Replacement

- Refer to the Calipers section in the Brakes chapter for Caliper Piston/Dust Seals Replacement.

Brake Master Cylinder Cup and Dust Seal Replacement

- Refer to the Master Cylinder section in the Brakes chapter for Brake/Master Cylinder Cup and Dust Seal Replacement.

Brake Fluid Check

Brake Fluid Level Inspection

- Check that the brake fluid level in the front brake reservoir [A] is above the lower level line [B].

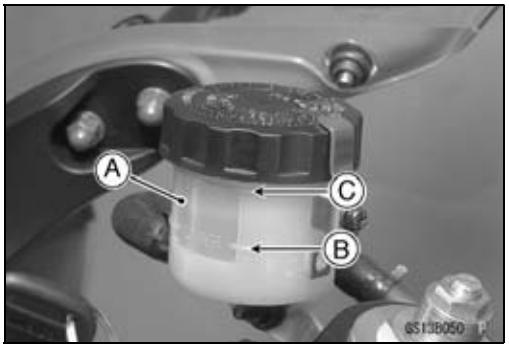

NOTE

○*Hold the reservoir horizontal by turning the handlebar when checking brake fluid level.*

★If the fluid level is lower than the lower level line, fill the reservoir to the upper level line [C].

- Check that the brake fluid level in the rear brake reservoir [A] is above the lower level [B].

★If the fluid level is lower than the lower level line, remove the fuel tank and fill the reservoir to the upper level line [C].

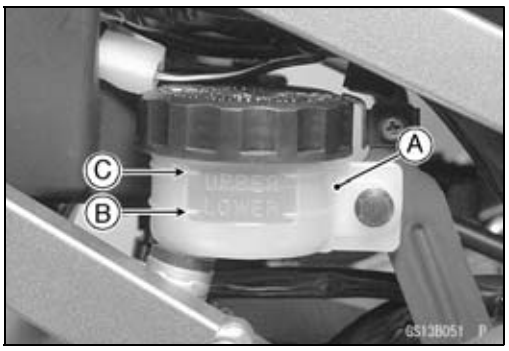

⚠ WARNING

Change the brake fluid in the brake line completely if the brake fluid must be refilled but the type and brand of the brake fluid that is already in the reservoir are unidentified. After changing the fluid, use only the same type and brand of fluid thereafter.

Recommended Disc Brake Fluid
Grade: DOT4

Brake Fluid Change

NOTE

○*The procedure to change the front brake fluid is as follows. Changing the rear brake fluid is the same as for the front brake.*

Maintenance Procedure

- Level the brake fluid reservoir.
- Remove the reservoir cap.
- Remove the rubber cap from the bleed valve [A] on the caliper.
- Attach a clear plastic hose [B] to the bleed valve, and run the other end of the hose into a container.
- Fill the reservoir with fresh specified brake fluid.

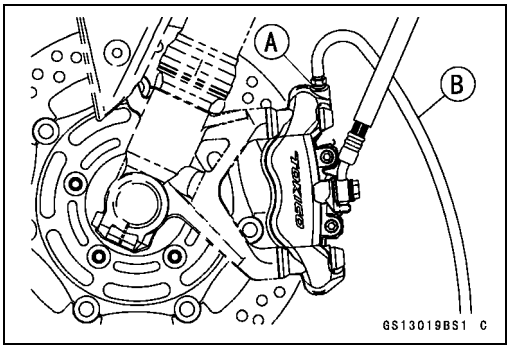

- Change the brake fluid.

○Repeat this operation until fresh brake fluid comes out from the plastic hose or the color of the fluid changes.

1. Open the bleed valve [A].
2. Apply the brake and hold it [B].
3. Close the bleed valve [C].
4. Release the brake [D].

NOTE

○*The fluid level must be checked often during the changing operation and replenished with fresh brake fluid. If the fluid in the reservoir runs out any time during the changing operation, the brakes will need to be bled since air will have entered the brake line.*

○*Front Brake: Repeat the above steps for the other caliper.*

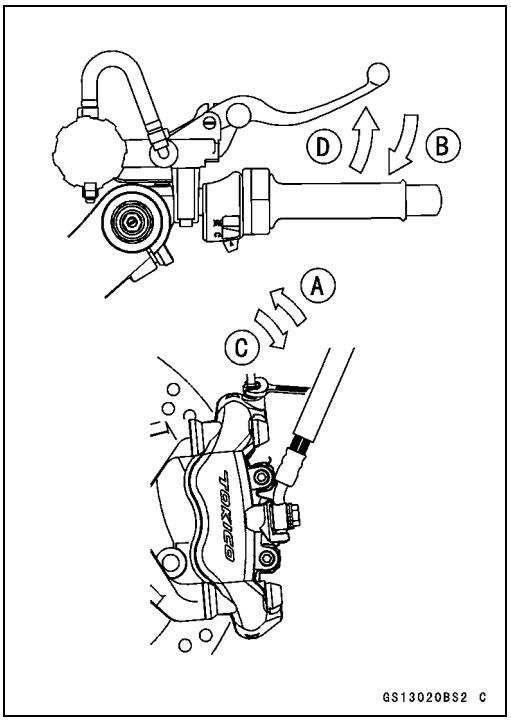

- Follow the procedure below to install the front/rear brake fluid reservoir cap correctly.

○First, tighten the front/rear brake fluid reservoir cap [B] clockwise [C] by hand until the resistance is felt fully; then, tighten the cap an additional 1/6 turn [D] while holding the brake fluid reservoir [A] body.

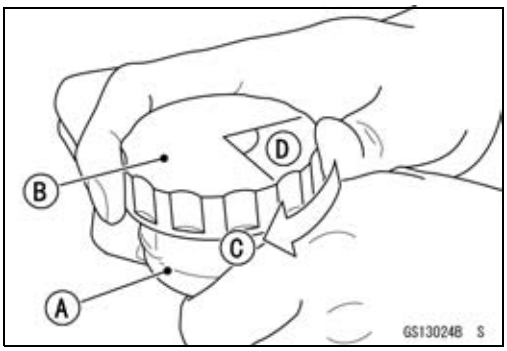

- Tighten:

Torque - Front Reservoir Cap Stopper Screw: 1.5 N·m (0.15 kgf·m, 13 in·lb)

- Tighten the bleed valve, and install the rubber cap.
- After changing the fluid, check the brake for good braking power, no brake drag, and no fluid leakage.

Torque - Bleed Valve: 7.8 N·m (0.80 kgf·m, 69 in·lb)

★If necessary, bleed the air from the lines.

Maintenance Procedure

Bleeding the Brake Line

The brake fluid has a very low compression coefficient so that almost all the movement of the brake lever or pedal is transmitted directly to the caliper for braking action. Air, however, is easily compressed. When air enters the brake lines, brake lever or pedal movement will be partially used in compressing the air. This will make the lever or pedal feel spongy, and there will be a loss in braking power.

⚠ WARNING

Be sure to bleed the air from the brake line whenever brake lever or pedal action feels soft or spongy after the brake fluid is changed, or whenever a brake line fitting has been loosened for any reason.

NOTE

○*The procedure to bleed the front brake line is as follows. Bleeding the rear brake line is the same as for the front brake.*

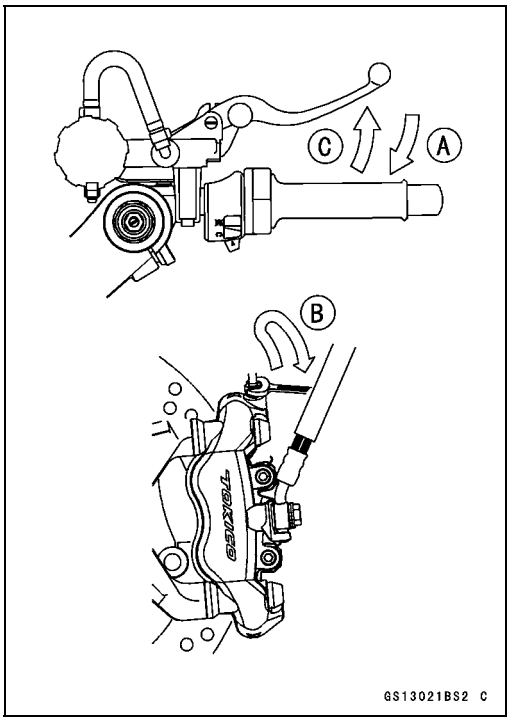

- Remove the reservoir cap, and fill the reservoir with fresh brake fluid to the upper level line in the reservoir.
- With the reservoir cap off, slowly pump the brake lever several times until no air bubbles can be seen rising up through the fluid from the holes at the bottom of the reservoir.

○Bleed the air completely from the master cylinder by this operation.

- Install the reservoir cap.
- Remove the rubber cap from the bleed valve on the caliper.
- Attach a clear plastic hose to the bleed valve, and run the other end of the hose into a container.
- Bleed the brake line and the caliper.

○Repeat this operation until no more air can be seen coming out into the plastic hose.

1. Pump the brake lever until it becomes hard, and apply the brake and hold it [A].
2. Quickly open and close [B] the bleed valve while holding the brake applied.
3. Release the brake [C].

NOTE

○*The fluid level must be checked often during the bleeding operation and replenished with fresh brake fluid as necessary. If the fluid in the reservoir runs completely out any time during bleeding, the bleeding operation must be done over again from the beginning since air will have entered the line.*

○*Tap the brake hose lightly from the caliper to the reservoir for more complete bleeding.*

○*Front Brake: Repeat the above steps for the other caliper.*

- Remove the clear plastic hose.

Maintenance Procedure

- Follow the procedure below to install the front/rear brake fluid reservoir cap correctly.

○First, tighten the front/rear brake fluid reservoir cap [B] clockwise [C] by hand until the resistance is felt fully; then, tighten the cap an additional 1/6 turn [D] while holding the brake fluid reservoir [A] body.

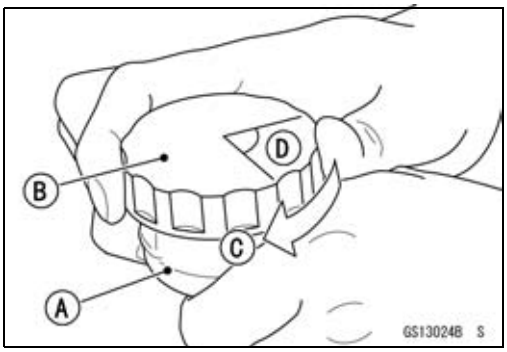

- Tighten:

  Torque - Front Reservoir Cap Stopper Screw: 1.5 N·m (0.15 kgf·m, 13 in·lb)

- Tighten the bleed valve, and install the rubber cap.

  Torque - Bleed Valve: 7.8 N·m (0.80 kgf·m, 69 in·lb)

- Check the fluid level.
- After bleeding is done, check the brake for good braking power, no brake drag, and no fluid leakage.

⚠ WARNING

When working with the disc brake, observe the precautions listed below.

1. Never reuse old brake fluid.
2. Do not use fluid from a container that has been left unsealed or that has been open for a long time.
3. Do not mix two types and brands of fluid for use in the brake. This lowers the brake fluid boiling point and could cause the brake to be ineffective. It may also cause the rubber brake parts to deteriorate.
4. Don't leave the reservoir cap off for any length of time to avoid moisture contamination of the fluid.
5. Don't change the fluid in the rain or when a strong wind is blowing.
6. Except for the disc pads and disc, use only disc brake fluid, isopropyl alcohol, or ethyl alcohol for cleaning of the brake parts. Do not use any other fluid for cleaning of these parts. Gasoline, engine oil, or any other petroleum distillate will cause deterioration of the rubber parts. Oil spilled on any part will be difficult to wash off completely and will eventually deteriorate the rubber used in the disc brake.
7. When handling the disc pads or disc, be careful that no disc brake fluid or any oil gets on them. Clean off any fluid or oil that inadvertently gets on the pads or disc with a high-flash point solvent. Do not use one which will leave an oily residue. Replace the pads with new ones if they cannot be cleaned satisfactorily.
8. Brake fluid quickly ruins painted surfaces; any spilled fluid should be completely wiped up immediately.
9. If any of the brake line fittings or the bleed valve is opened at any time, the **AIR MUST BE BLED FROM THE BRAKE LINE.**

Maintenance Procedure

Brake Hoses and Connections Check

- Inspect the brake hose and fittings for deterioration, cracks and signs of leakage.

○The high pressure inside the brake line can cause fluid to leak [A] or the hose to burst if the line is not properly maintained. Bend and twist the rubber hose while examining it.

★Replace the hose if any cracks [B] or bulges [C] are noticed.

★Tighten any loose fittings.

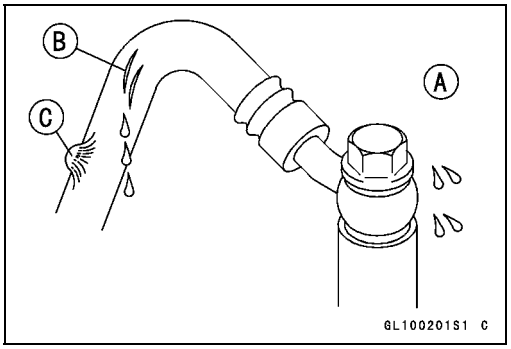

Suspension

Front Fork Oil Leak Check

- Visually inspect the front forks [A] for oil leakage, scoring or scratches on the outer surface of the outer tubes.

★Replace or repair any defective parts, if necessary.

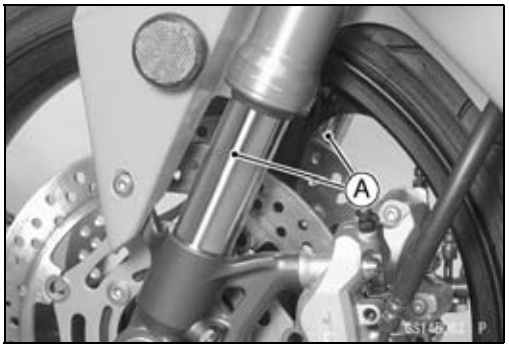

Rear Shock Absorber Oil Leak Check

- Visually inspect the shock absorber [A] for oil leakage.

★If the oil leakage is found on it, replace the shock absorber with a new one.

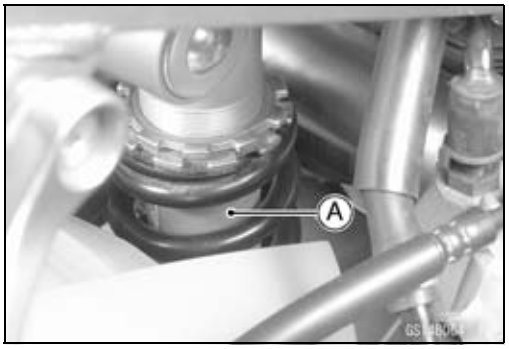

Swingarm Pivot Lubrication

- The grease nipple [A] is equipped for the lubrication of swingarm bearing. Force grease into the nipple until the grease comes out from the swingarm pivot, and wipe off any excess of it.

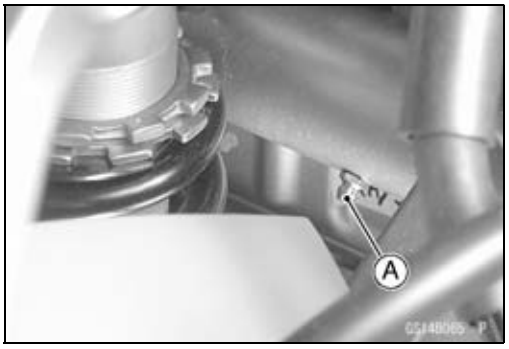

Uni-trak Linkage Lubrication

In order for the tie-rod and rocker arm to function safely and wear slowly, it should be lubricated in accordance with the Periodic Maintenance Chart.

- For the rocker arm and tie-rod needle bearings, there are grease nipples [A] on the rocker arm and swingarm for lubrication. Force grease into the nipples until it comes out at both sides of the rocker arm and tie-rod, and wipe off any excess.

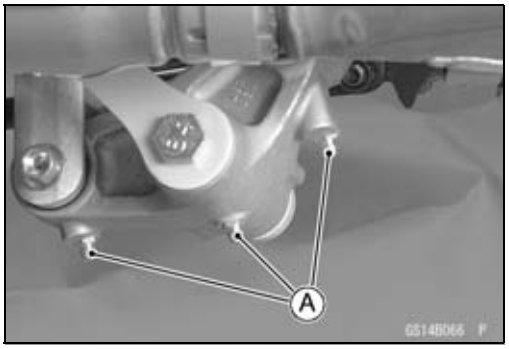

Steering

Steering Check

Steering Inspection

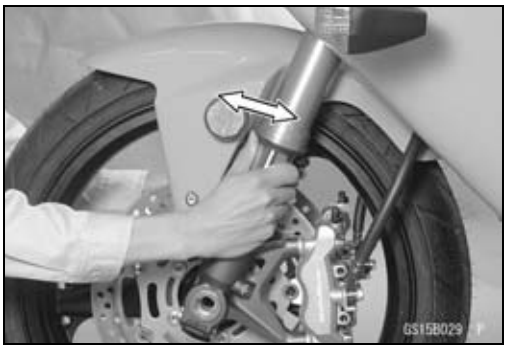

- Lift the front wheel off the ground using the jack.

  Special Tool - Jack: 57001–1238
- With the front wheel pointing straight ahead, alternately tap each end of the handlebar. The front wheel should swing fully left and right from the force of gravity until the fork hits the stop.

★If the wheel binds or catches before the stop, the steering is too tight.

- Feel for steering looseness by pushing and pulling the forks.

★If you feel looseness, the steering is too loose.

NOTE

○*The cables and wiring will have some effect on the motion of the fork which must be taken into account.*
○*Be sure the wires and cables are properly routed.*
○*The bearings must be in good condition and properly lubricated in order for any test to be valid.*

Steering Adjustment

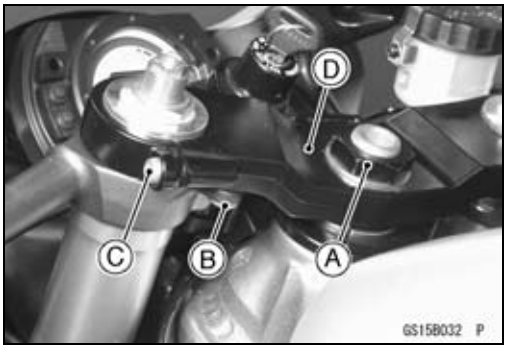

- Remove:
  Upper fairing (see Frame chapter)
  Stem Head Nut[A]
  Handlebar Position Bolts[B]
- Loosen the upper fork clamp bolts[C].
- Remove the stem head[D].

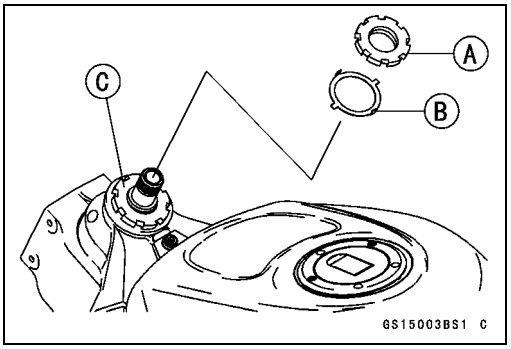

- Remove the steering stem locknut[A] with the steering stem nut wrench.

  Special Tool - Steering Stem Nut Wrench: 57001–1100
- Bend the claw of lock washer[B] faced steering stem locknut to straight.
- Remove the lock washer.
- Tighten the steering stem nut[C] with the steering stem nut wrench, and loosen it ,tighten it again specified torque.

  Torque - Steering Stem Nut:20 N·m (2.0 kgf·m,14.5 ft·lb)

★If the steering is too tight, loosen the stem nut a fraction of a turn.

★If the steering is too loose, tighten the stem nut a fraction of a turn.

Maintenance Procedure

NOTE

○*Turn the stem nut 1/8 turn at a time maximum.*

- Install the lock washer so that claw of washer fit the notch of steering stem nut.
- First tighten the steering stem locknut by hand until the resistance is felt fully, then tighten steering stem nut additional more than two notches so that align the notch of stem nut and stem locknut.
- Bend the claw of lock washer to the steering stem locknut notch.
- Install the stem head.
- Tighten:

Torque - Upper Fork Clamp Bolts: 20 N·m (2.0 kgf·m, 14.5 ft·lb)
Handlebar Position Bolts: 9.8 N·m (1.0 kgf·m, 87 in·lb)
Steering Stem Head Nut: 78 N·m (8.0 kgf·m, 58 ft·lb)

- Check the steering again.

★If the steering is still too tight or too loose, repeat the adjustment.

Steering Stem Bearing Lubrication

- Remove the steering stem (see Steering chapter).
- Using a high flash-point solvent, wash the upper and lower ball bearings in the cages, and wipe the upper and lower outer races, which are press-fitted into the frame head pipe, clean off grease and dirt.
- Visually check the outer races and the ball bearings.

★Replace the bearing assemblies if they show wear or damage.

- Pack the upper and lower ball bearings [A] in the cages with grease, and apply a light coat of grease to the upper and lower outer races.
- Install the steering stem, and adjust the steering.

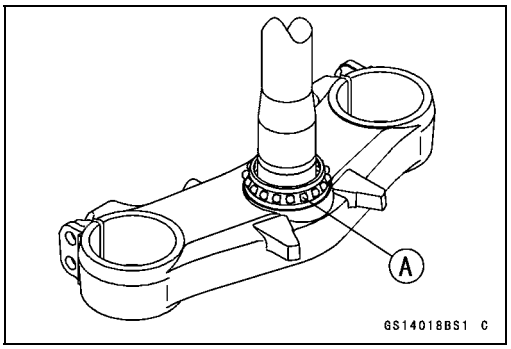

Electrical System

Spark Plug Check

Spark Plug Cleaning and Inspection

- Remove the spark plug (see Electrical System chapter), and visually inspect.
- Clean the spark plug, preferably in a sandblasting device, and then clean off any abrasive particles. The plug may also be cleaned using a high flash-point solvent and a wire brush or other suitable tool.

★If the spark plug electrodes are corroded or damaged, or if the insulator is cracked, replace the plug. Use the standard spark plug or its equivalent.

Maintenance Procedure

Spark Plug Gap Inspection

- Measure the gap [A] with a wire-type thickness gauge.

★If the gap is incorrect, carefully bend the side electrode [B] with a suitable tool to obtain the correct gap.

Spark Plug Gap : 0.7 ~ 0.8 mm (0.028 ~ 0.031 in.)

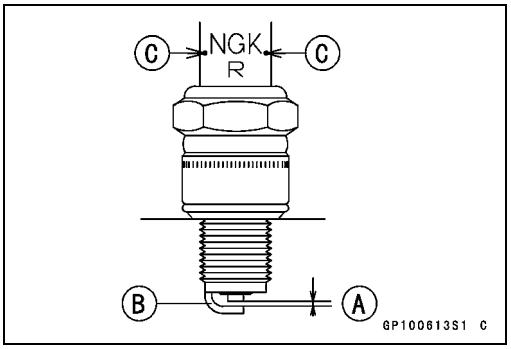

CAUTION

Use only the recommended spark plugs (special marks). These spark plugs have special marks [C] on the insulator, as shown. Other spark plugs will wear prematurely.

General Lubrication

Lubrication

- Before lubricating each part, clean off any rusty spots with rust remover and wipe off any grease, oil, dirt, or grime.
- Lubricate the points listed below with indicated lubricant.

NOTE

○*Whenever the vehicle has been operated under wet or rainy conditions, or especially after using a high-pressure water spray, perform the general lubrication*

Pivots: Lubricate with Grease.

Clutch Lever
Brake Lever
Brake Pedal
Side Stand
Rear Brake Joint Pin

Points: Lubricate with Grease.

Clutch Inner Cable Upper and Lower Ends [A]
Throttle Inner Cable Upper and Lower Ends
Choke Inner Cable Upper and Lower Ends

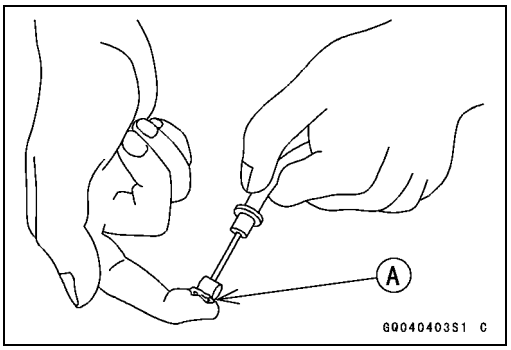

Cables: Lubricate with Rust Inhibiter

Choke Cable
Throttle Cables
Clutch Cable

- Lubricate the cables by seeping the oil between the cable and housing.

○The cable may be lubricated by using a commercially available pressure cable lubricator with an aerosol cable lubricant.

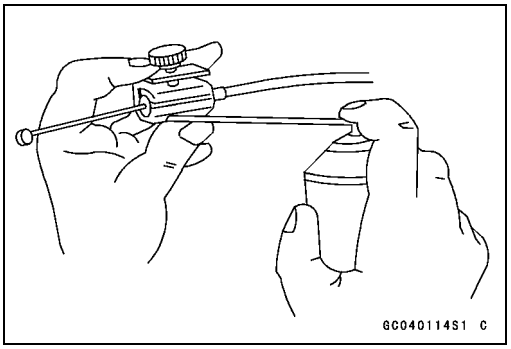

Maintenance Procedure

- With the cable disconnected at both ends, the inner cable should move freely [A] within the cable housing.

★If cable movement is not free after lubricating, if the cable is frayed [B], or if the cable housing is kinked [C], replace the cable.

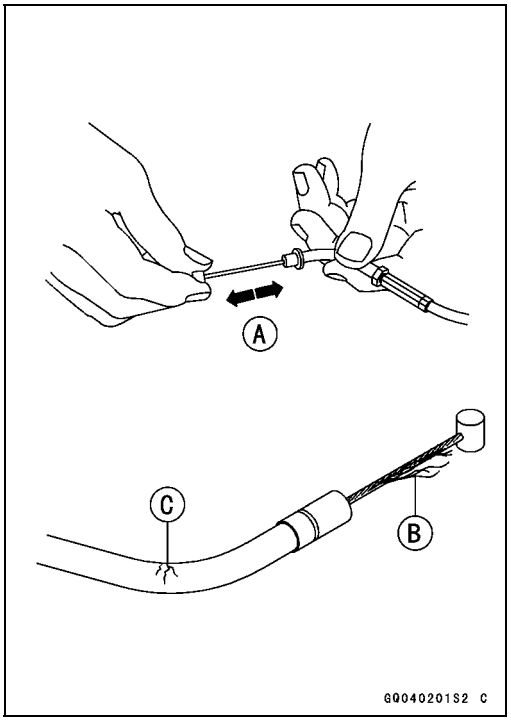

Maintenance Procedure

Nut, Bolts, and Fasteners Tightness Check

Tightness Inspection

- Check the tightness of the bolts and nuts listed here. Also, check to see that each cotter pin is in place and in good condition.

NOTE

○*For the engine fasteners, check the tightness of them when the engine is cold (at room temperature).*

★If there are loose fasteners, retorque them to the specified torque following the specified tightening sequence. Refer to the appropriate chapter for torque specifications. If torque specifications are not in the appropriate chapter, see the Standard Torque Table. For each fastener, first loosen it by 1/2 turn, then tighten it.

★If cotter pins are damaged, replace them with new ones.

Nut, Bolt and Fastener to be checked

Wheels:
- Front Axle Nut
- Front Axle Clamp Bolt
- Rear Axle Nut
- Rear Axle Nut Cotter Pin

Brakes:
- Front Master Cylinder Clamp Bolts
- Caliper Mounting Bolts
- Rear Master Cylinder Mounting Bolts
- Brake Lever Pivot Nut
- Brake Pedal Bolt
- Brake Rod Joint Cotter Pin

Suspension:
- Front Fork Clamp Bolts
- Front Fender Mounting Bolts
- Rear Shock Absorber Mounting Nuts
- Swingarm Pivot Shaft Nut
- Uni-Trak Link Nuts

Steering:
- Stem Head Nut
- Handlebar Mounting Bolts

Engine:
- Engine Mounting Bolts
- Cylinder Head Bolts
- Muffler Mounting Bolts
- Exhaust Manifold Holder Nuts
- Muffler Connecting Clamp Bolt
- Clutch Lever Pivot Nut

Others:
- Side Stand Bolt
- Footpeg Mounting Bolts
- Footpeg Bracket Mounting Bolts

Fuel System (DFI)

Table of Contents

Exploded View 3-4
Specifications 3-10
Special Tools 3-12
DFI System 3-14
DFI Servicing Precautions 3-20
Troubleshooting the DFI System 3-22
Outline 3-22
Inquiries to Rider 3-28
DFI System Troubleshooting Guide .. 3-31
ECU 3-40
ECU Removal 3-40
ECU Installation 3-40
ECU Power Supply Inspection 3-41
DFI Power Source 3-43
ECU Fuse Removal 3-43
ECU Fuse Installation 3-43
ECU Fuse Inspection 3-43
ECU Main Relay Removal 3-43
ECU Main Relay Inspection 3-43
FI Indicator LED Light 3-44
LED Light Inspection 3-45
Fuel Line 3-46
Fuel Pressure Inspection 3-46
Fuel Flow Rate Inspection 3-47
Fuel Pump 3-49
Fuel Pump Removal 3-49
Fuel Pump Installation 3-49
Operation Inspection 3-50
Operating Voltage Inspection 3-50
Fuel Pump Relay 3-52
Fuel Pump Relay Removal 3-52
Fuel Pump Relay Inspection 3-52
Fuel Injectors 3-54
Audible Inspection 3-54
Injector Signal Test 3-54
Injector Resistance Inspection 3-55
Injector Unit Test 3-55
Injector Voltage Inspection 3-56
Injector Fuel Line Inspection 3-57
Self-Diagnosis 3-59
Self-diagnosis Outline 3-59
Self-diagnosis Procedures 3-59
Service Code Clearing Procedures 3-60
How to Read Service Codes 3-62
How to Erase Service Codes 3-62
Service Code Table 3-63
Backups 3-64
Main Throttle Sensor (Service Code 11) 3-66
Main Throttle Sensor Removal/Adjustment 3-66
Input Voltage Inspection 3-66
Output Voltage Inspection 3-68
Resistance Inspection 3-70
Inlet Air Pressure Sensor (Service Code 12) 3-71
Removal 3-71
Installation 3-71
Input Voltage Inspection 3-71
Output Voltage Inspection 3-72
Inlet Air Temperature Sensor (Service Code 13) 3-76
Removal/Installation 3-76
Output Voltage Inspection 3-76
Sensor Resistance Inspection 3-77
Water Temperature Sensor (Service Code 14) 3-79
Removal/Installation 3-79
Output Voltage Inspection 3-79
Sensor Resistance Inspection 3-80
Atmospheric Pressure Sensor (Service Code 15) 3-81
Removal 3-81
Installation 3-81
Input Voltage Inspection 3-81
Output Voltage Inspection 3-82
Crankshaft Sensor (Service Code 21) 3-85
Crankshaft Sensor Removal/Installation 3-85
Crankshaft Sensor Inspection 3-85
Camshaft Position Sensor (Service Code 23) 3-86
Camshaft Position Sensor Removal/Installation 3-86
Camshaft Position Sensor Inspection 3-86
Speed Sensor (Service Code 24, 25) 3-87
Speed Sensor Removal/Installation 3-87
Speed Sensor Inspection 3-87
Input Voltage Inspection 3-87

Output Voltage Inspection 3-87
Vehicle-down Sensor (Service Code 31) 3-89
Removal 3-89
Installation 3-89
Inspection 3-89
Subthrottle Sensor (Service Code 32) 3-92
Subthrottle Sensor Removal/Adjustment 3-92
Input Voltage Inspection 3-92
Output Voltage Inspection 3-93
Resistance Inspection 3-95
Stick Coils (#1, #2, #3, #4: Service Code 51, 52, 53, 54) 3-96
Removal/Installation 3-96
Input Voltage Inspection 3-96
Subthrottle Valve Actuator (Service Code 62) 3-98
Subthrottle Valve Actuator Removal 3-98
Subthrottle Valve Actuator Inspection 3-98
Resistance Inspection 3-98
Input Voltage Inspection 3-99
Throttle Grip and Cables 3-100
Free Play Inspection 3-100
Free Play Adjustment 3-100
Cable Installation 3-100
Cable Lubrication 3-100
Choke Cable 3-101
Free Play Inspection 3-101
Free Play Adjustment 3-101
Choke Cable Installation 3-101
Cable Lubrication 3-101
Throttle Body Assy 3-102
Idle Speed Inspection 3-102
Throttle Bore Cleaning 3-102
Synchronization Inspection 3-102
Synchronization Adjustment 3-102
Throttle Body Assy Removal 3-102
Throttle Body Assy Installation 3-103
Throttle Body Assy Disassembly . 3-104
Throttle Body Assy Assembly 3-105
Air Line 3-106
Element Removal 3-106
Element Installation 3-106
Air Cleaner Element Inspection ... 3-106
Oil Draining 3-106
Air Inlet Duct Removal 3-106
Air Inlet Duct Installation 3-106
Fuel Tank 3-107
Fuel Tank Removal 3-107
Fuel Tank Installation 3-108
Fuel Tank Inspection 3-109
Fuel Tank Cleaning 3-109
Evaporative Emission Control System 3-110
Parts Removal/Installation 3-110
Hose Inspection 3-110
Separator Inspection 3-110
Separator Operation Test 3-111
Canister Inspection (California Model Only) 3-111

Exploded View

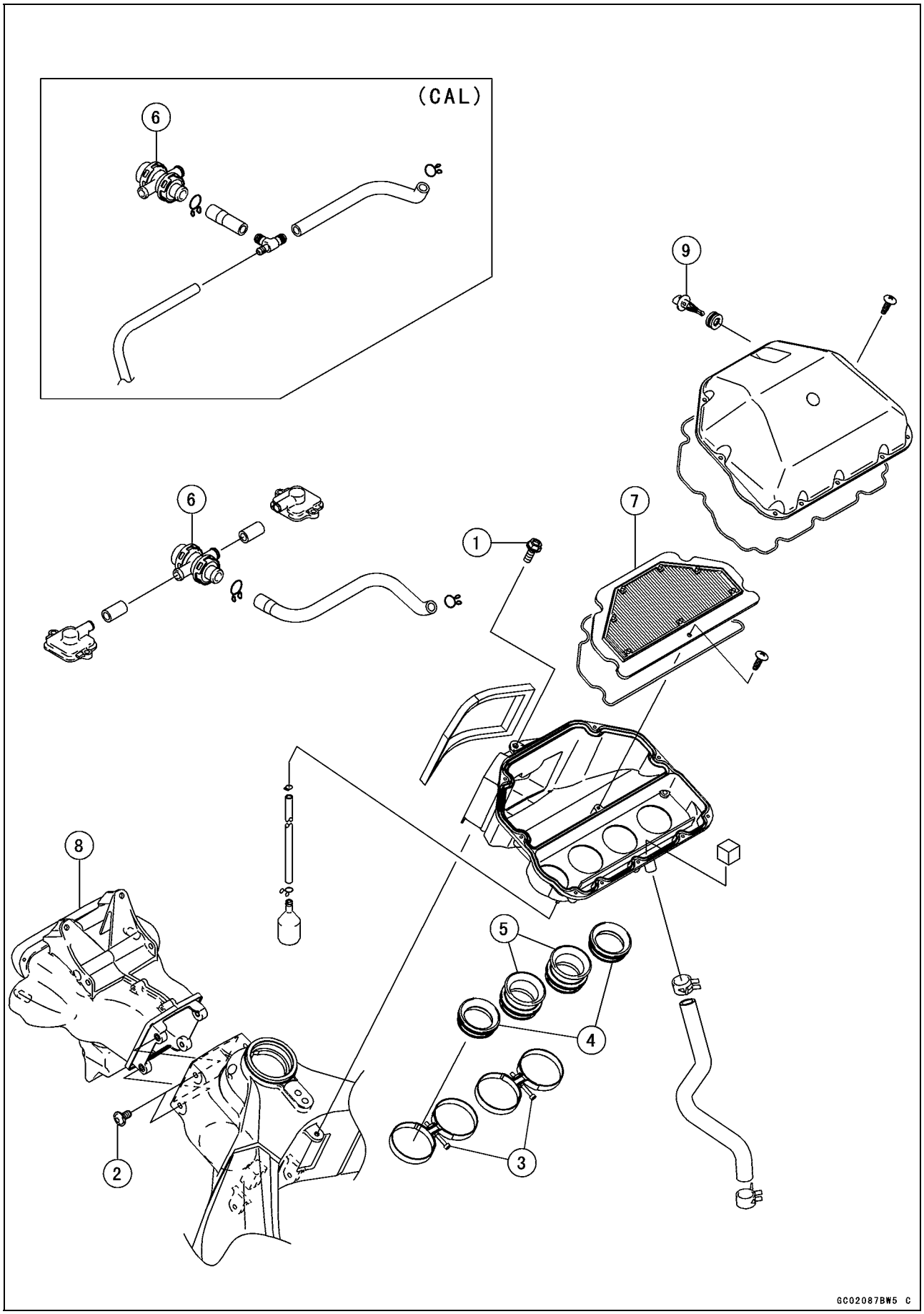

Exploded View

No.	Fastener	Torque			Remarks
		N·m	kgf·m	ft·lb	
1	Air cleaner housing mounting bolt	6.9	0.70	61 in·lb	
2	Air inlet duct mounting bolts	6.9	0.70	61 in·lb	
3	Air cleaner housing clamp bolts	2.5	0.25	22 in·lb	

No.	Parts		Remarks
4	Duct (#1, #4)	Standard	Length 41.3 mm (1.63 in.)
		Option	Length 21.3 mm (0.84 in.)
5	Duct (#2, #3)	Standard	Length 81.3 mm (3.20 in.)
		Option	Length 61.3 mm (2.41 in.)

6. Vacuum Switch-Valve
7. Air Cleaner Element
8. Inlet Air Duct
9. Inlet Air Temperature Sensor

CAL: California model

Exploded View

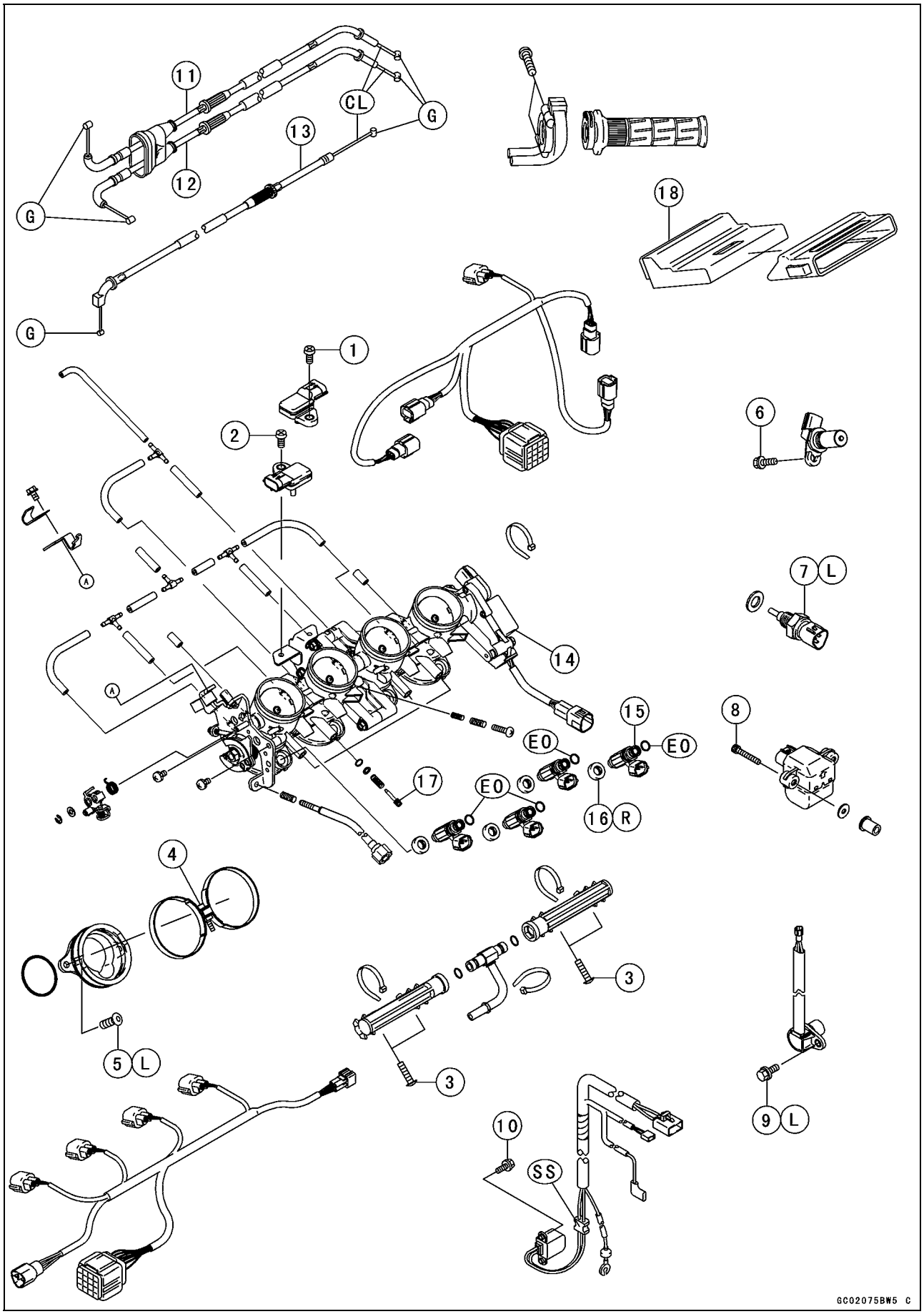

Exploded View

No.	Fastener	Torque			Remarks
		N·m	kgf·m	ft·lb	
1	Inlet air pressure sensor screw	4.9	0.50	43 in·lb	
2	Atmospheric pressure sensor screw	4.9	0.50	43 in·lb	
3	Fuel delivery pipe mounting screws	3.4	0.35	30 in·lb	
4	Throttle body assembly holder clamp bolts	3.0	0.31	27 in·lb	
5	Throttle body assembly holder bolts	12	1.2	106 in·lb	L
6	Camshaft position sensor	12	1.2	106 in·lb	
7	Water temperature sensor	25	2.5	18	SS
8	Vehicle-down sensor	2.0	0.20	17 in·lb	
9	Speed sensor mounting bolt	3.9	0.40	35 in·lb	L
10	Crankshaft sensor mounting bolts	5.9	0.60	52 in·lb	

11. Throttle Cable (accelerator)
12. Throttle Cable (decelerator)
13. Choke Cable
14. Subthrottle Valve Actuator
15. Injectors
16. Dust Seals
17. Bypass Screw
18. ECU (Electric Control Unit)

L: Apply a non-permanent locking agent.
G: Apply grease.
SS: Apply silicone sealant (Kawasaki Bond: 56019–120).
CL: Apply cable lubricant.
R: Replacement Parts

Exploded View

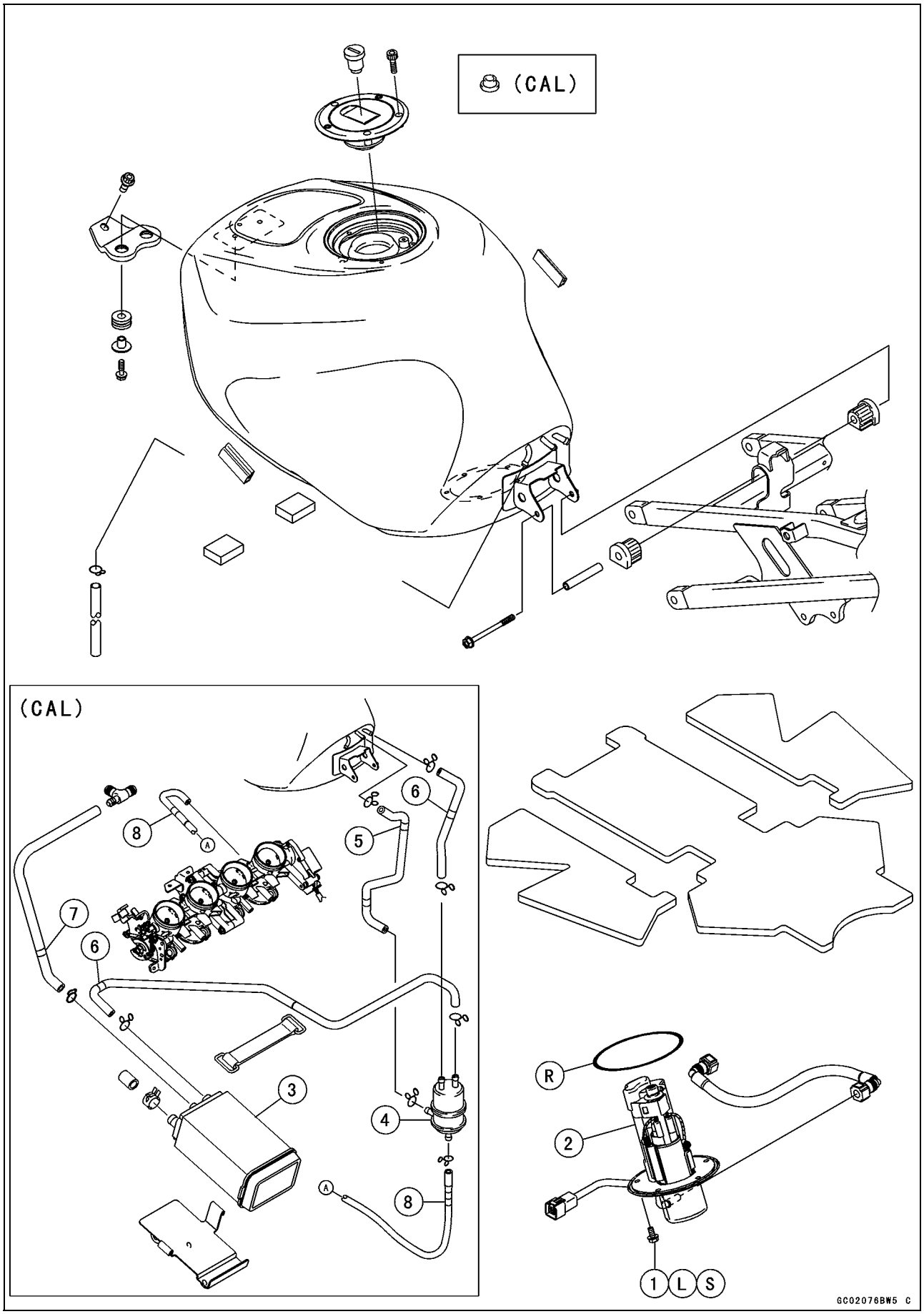

Exploded View

No.	Fastener	Torque			Remarks
		N·m	kgf·m	ft·lb	
1	Fuel pump bolts	9.8	1.0	87 in·lb	

2. Fuel Pump
3. Canister
4. Separator
5. Red
6. Blue
7. Green
8. White

L: Apply a non-permanent locking agent.
R: Replacement Parts
CAL: California model

Specifications

Item	Standard
Digital Fuel Injection System	
Idle Speed	1 300 ± 50 r/min (rpm)
Throttle Assy:	
Type	Four barrel type
Bore	ϕ38 mm (1.5 in)
Throttle body vacuum:	
ZX636B	24 ± 1.3 kPa (180 ± 10 mmHg)
ZX600K	22 ± 1.3 kPa (165 ± 10 mmHg)
Bypass screws	– – –
ECU (Electronic Control Unit):	
Make	Denso
Type	Digital memory type, with built in IC igniter, sealed with resin
Usable engine speed	100 ~ 14 690 r/min (rpm)
Fuel Pressure (high pressure line):	
Right after Ignition SW ON,	304 kPa (3.1 kgf/cm², 44 psi) with fuel pump running
with fuel pump running for 3 sec	280 kPa (2.9 kgf/cm², 41 psi) with fuel pump stopped
with engine idling	304 kPa (3.1 kgf/cm², 44 psi) with fuel pump running
Fuel Pump:	
Type	In-tank pump (in fuel tank), or Wesco pump (friction pump)
Discharge	67 mL (2.27 US oz) or more for 3 seconds
Fuel Injectors:	
Type	INP–280
Nozzle type	One spray type with 4 holes
Resistance	about 11.7 ~ 12.3 Ω at 20°C (68°F)
Throttle Sensor:	Non-adjustable and non-removable
Input voltage	4.75 ~ 5.25 V DC between BL and BR/BK leads
Output voltage	1.02 ~ 4.62 V DC between Y/W and BR/BK leads (at idle throttle opening to full throttle opening)
Resistance	4 ~ 6 kΩ
Inlet Air Pressure Sensor/ Atmospheric Pressure Sensor:	
Input voltage	4.75 ~ 5.25 V DC between BL and BR/BK leads
Output voltage	3.80 ~ 4.20 V DC at standard atmospheric pressure (see this text for details)
Inlet Air Temperature Sensor:	
Resistance	1.6 ~ 3.7 kΩ at 20°C (68°F)
	0.24 ~ 0.43 kΩ at 80°C (176°F)
Output voltage at ECU	about 2.25 ~ 2.50 V @20°C (68°F)
Water Temperature Sensor:	
Resistance	see Electrical System chapter
Output voltage at ECU	about 2.80 ~ 2.97 V @20°C (68°F)
Speed Sensor:	
Input voltage at sensor	about 9 ~ 11 V DC at Ignition SW ON
Output voltage at sensor	about 0.05 ~ 0.07 V DC at Ignition SW ON and 0 km/h

Specifications

Item	Standard
Vehicle-down Sensor:	
Detection method	Magnetic flux detection method
Detection angle	More than 60 ~ 70° for each bank
Detection time	Within 0.5 ~ 1.0 sec.
Output voltage	with the sensor tilted 60 ~ 70° or more: 3.7 ~ 4.4 V
	with sensor arrow mark pointed up: 0.4 ~ 1.4 V
Subthrottle Sensor:	Non-adjustable and non-removal
Input Voltage	4.75 ~ 5.25 V DC between BL and BR/BK leads
Output Voltage	1.08 ~ 4.60 V DC between BR and BR/BK leads (at idle throttle opening to full throttle opening)
Resistance	4 ~ 6 kΩ
Subthrottle Valve Actuator:	
Resistance	about 5 ~ 7 kΩ
Input voltage	about 8.5 ~ 10.5 V DC
Throttle Grip and Cables	
Throttle grip free play	2 ~ 3 mm (0.08 ~ 0.12 in)
Choke Cable	
Choke cable free play	2 ~ 3 mm (0.08 ~ 0.12 in)

Special Tools

Oil Pressure Gauge:
57001–125

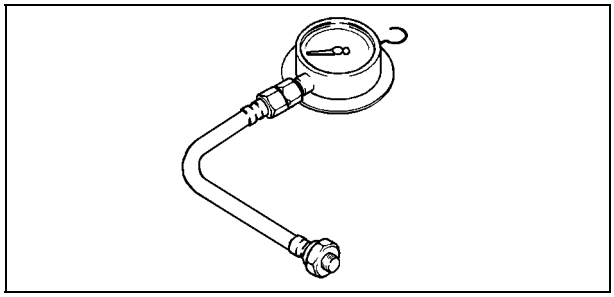

Carburetor Drain Plug Wrench, Hex 3:
57001–1269

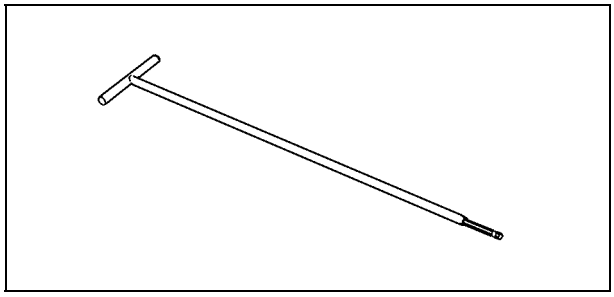

Fork Oil Level Gauge:
57001–1290

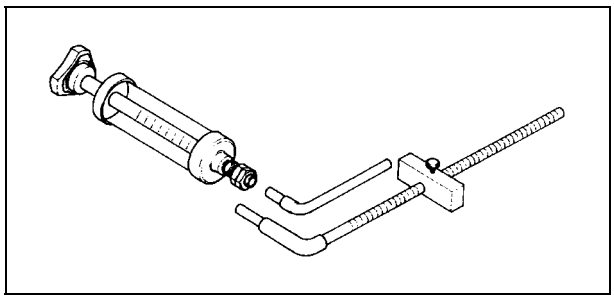

Pilot Screw Adjuster, C:
57001–1292

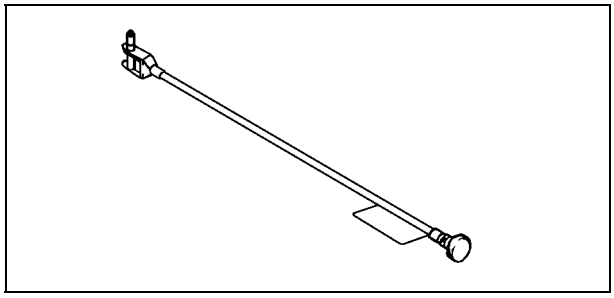

Hand Tester:
57001–1394

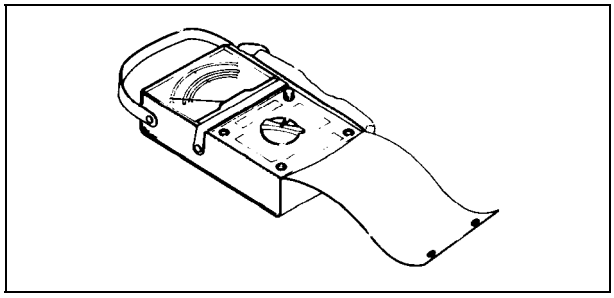

Throttle Sensor Setting Adapter:
57001–1400

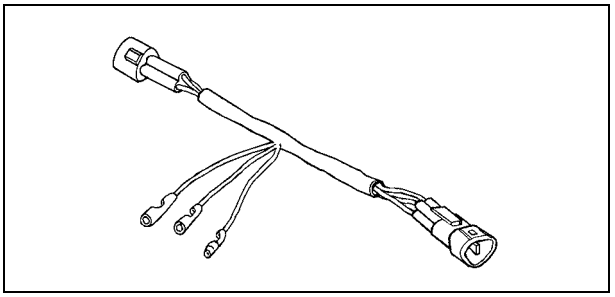

Fuel Pressure Gauge Adapter:
57001–1417

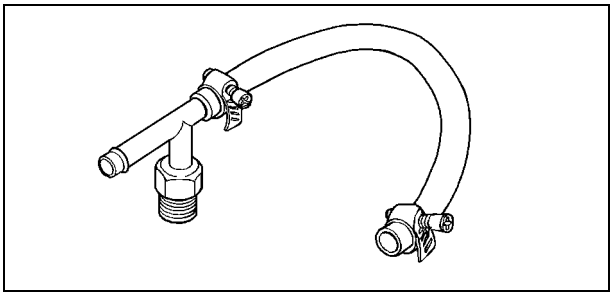

Needle Adapter Set:
57001–1457

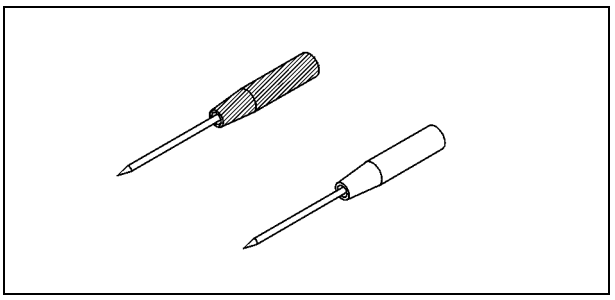

Throttle Sensor Setting Adapter:
57001–1538

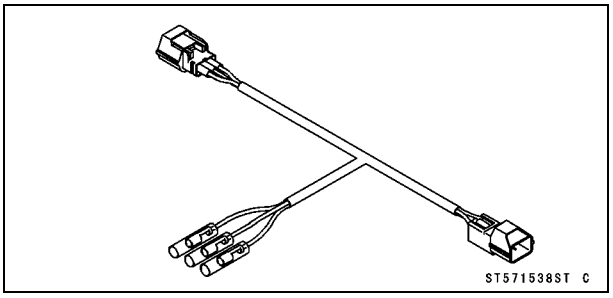

Sensor Harness Adapter:
57001–1561

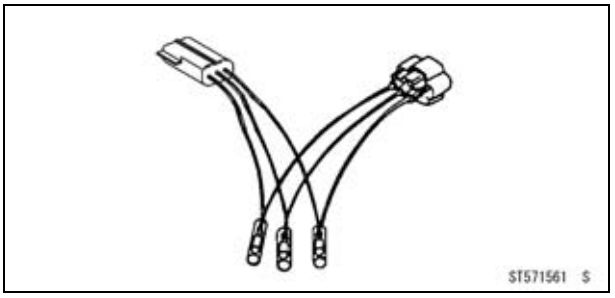

Special Tools

Kawasaki Bond (Silicone Sealant):
56019–120

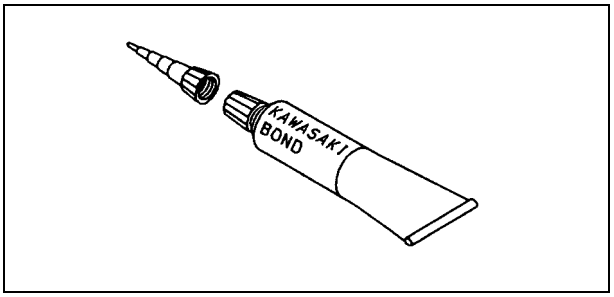

DFI System

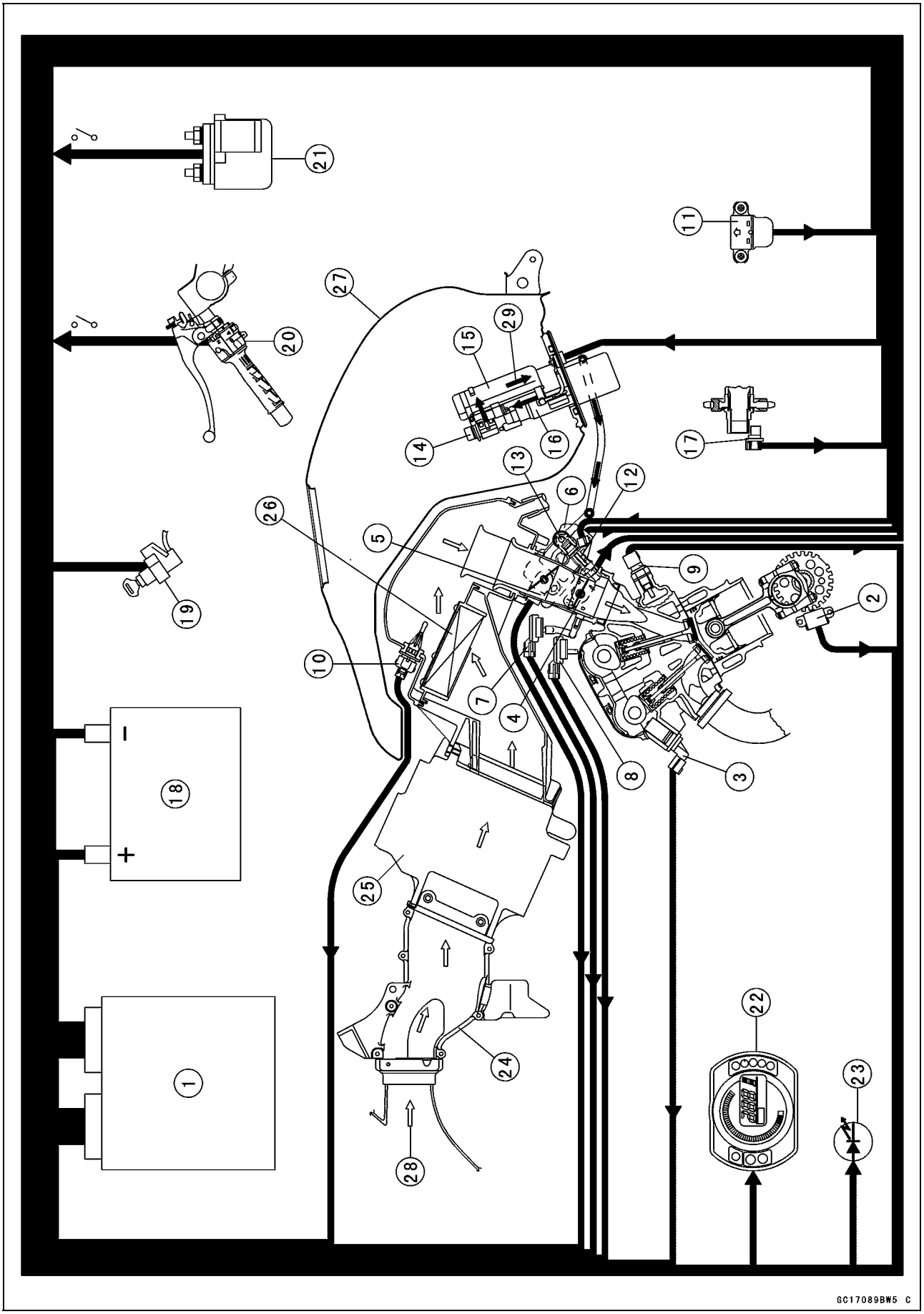
1
2
3
4
5
6
7
8
9
10
11
12
13
14
15
16
17
18
19
20
21
22
23
24
25
26
27
28
29
GC17089BW5 C

DFI System

1. ECU (Electric Control Unit)
2. Crankshaft Sensor
3. Camshaft Position Sensor
4. Main Throttle Sensor
5. Subthrottle Sensor
6. Subthrottle Valve Actuator
7. Inlet Air Pressure Sensor
8. Atmospheric Pressure Sensor
9. Water Temperature Sensor
10. Inlet Air Temperature Sensor
11. Vehicle-down Sensor
12. Injectors
13. Delivery Pipe
14. Pressure Regulator
15. Fuel Filter
16. Fuel Pump
17. Speed Sensor
18. Battery
19. Ignition Switch
20. Starter Locknut & Engine Stop Switch
21. Starter Relay
22. Tachometer
23. FI Indicator LED Light
24. Inlet Air Duct
25. Frame
26. Air Cleaner Element
27. Fuel Tank
28. Air Flow
29. Fuel Flow

DFI System

DFI System Wiring Diagram

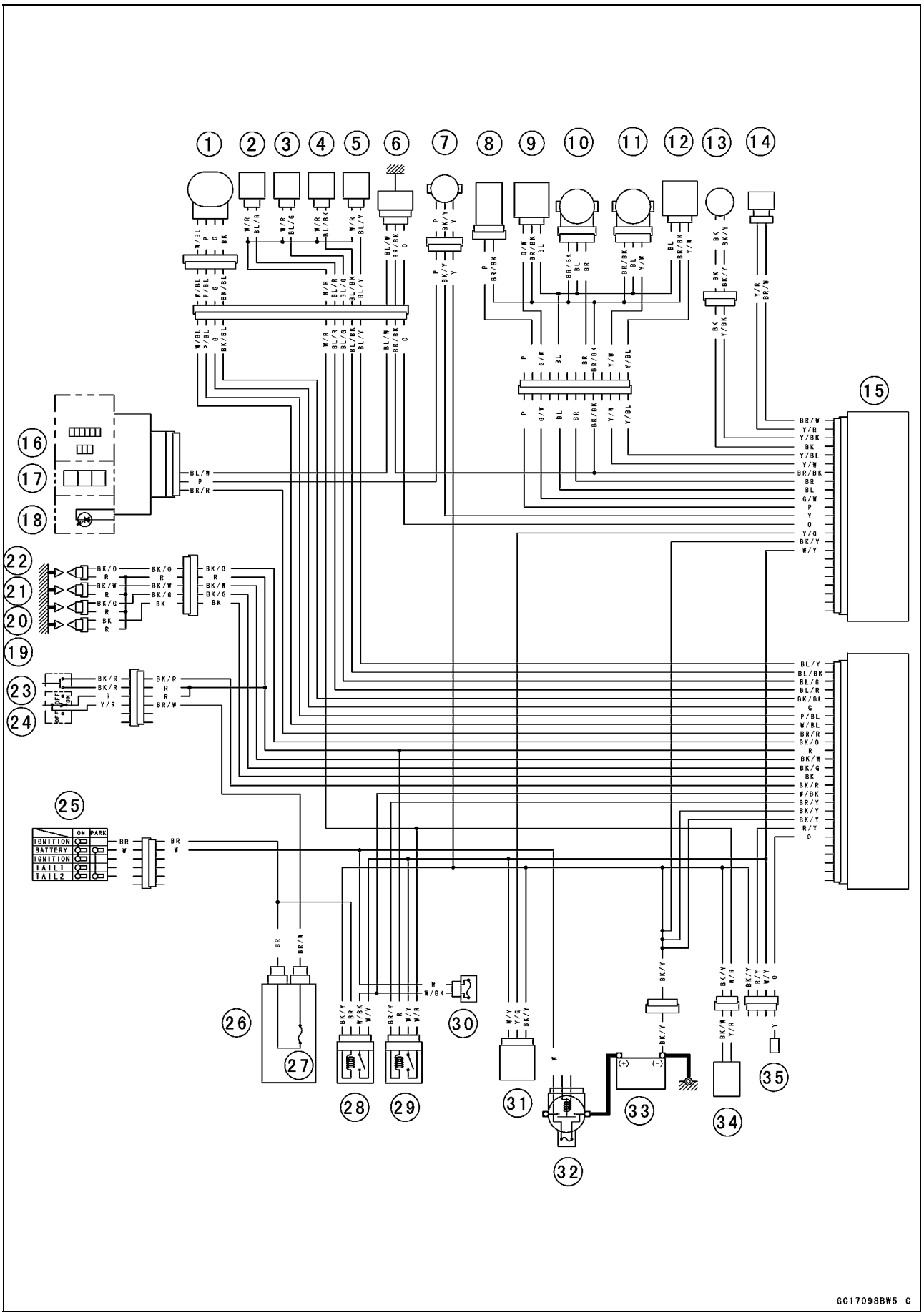

DFI System

Part Name

1. Subthrottle Valve Actuator
2. Injector #1
3. Injector #2
4. Injector #3
5. Injector #4
6. Water Temperature Sensor
7. Speed Sensor
8. Inlet Air Temperature Sensor
9. Atmospheric Pressure Sensor
10. Subthrottle Sensor
11. Main Throttle Sensor
12. Inlet Air Pressure Sensor
13. Crankshaft Sensor
14. Camshaft Position Sensor
15. ECU (Electric Control Unit)
16. Water Temperature Gauge
17. Speedometer
18. FI Indicator LED Light
19. Stick Coil #1
20. Stick Coil #2
21. Stick Coil #3
22. Stick Coil #4
23. Starter Button
24. Engine Stop Switch
25. Ignition Switch
26. Junction Box
27. Ignition Fuse 10A
28. ECU Main Relay
29. Fuel Pump Relay
30. ECU Fuse 15A
31. Vehicle-down Sensor
32. Main Fuse 30A
33. Battery
34. Fuel Pump
35. Self-diagnosis Terminal

DFI System

Terminal Numbers of ECU Connectors

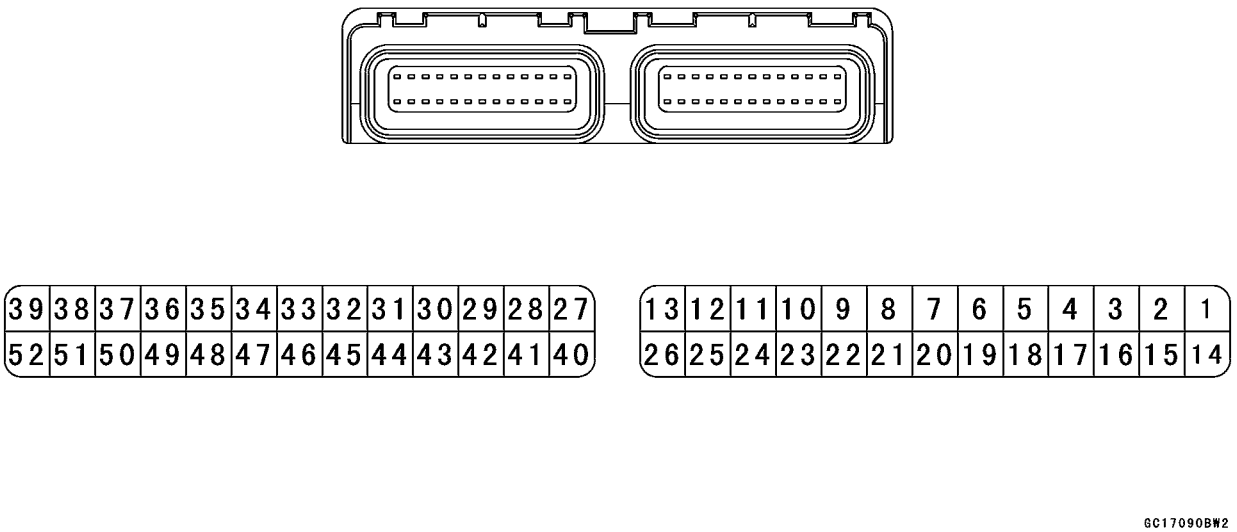

DFI System

Terminal Names

1. Power Supply to Sensors
2. Main Throttle Sensor Output Signal
3. Subthrottle Sensor Output Signal
4. Atmospheric Pressure Sensor Output Signal
5. Water Temperature Sensor Output Signal
6. Unused
7. Ignition Switch Output Signal
8. Unused
9. Camshaft Position Sensor (+) Output Signal
10. Unused
11. Crankshaft Sensor (+) Output Signal
12. Unused
13. Power Supply to ECU (from ECU Mine Relay)
14. Ground to Sensors
15. Unused
16. Vehicle-down Sensor Output Signal
17. Inlet Air Pressure Sensor Output Signal
18. Inlet Air Temperature Sensor Output Signal
19. Unused
20. Speed Sensor Output Signal
21. Unused
22. Camshaft Position Sensor (–) Output Signal
23. Unused
24. Crankshaft Sensor (–) Output Signal
25. Unused
26. Ground to ECU
27. Engine Stop Switch Output Signal
28. Starter Lockout Switch Output Signal
29. Starter Button Output Signal
30. Fuel Pump Relay Output Signal
31. Subthrottle Valve Actuator Output Signal 1
32. Subthrottle Valve Actuator Output Signal 2
33. Unused
34. Tachometer Output Signal
35. Injector #2 Output Signal
36. Injector #1 Output Signal
37. Stick Coil #3 Output Signal
38. Stick Coil #2 Output Signal
39. Stick Coil #1 Output Signal
40. Input Signal for Engine Stop
41. Self- diagnosis Terminal
42. Unused (Mode Switch)
43. Power Supply to ECU (from Battery)
44. Subthrottle Valve Actuator Output Signal 3
45. Subthrottle Valve Actuator Output Signal 4
46. External Diagnosis System Signal
47. FI Indicator LED Light
48. Injector #4 Output Signal
49. Injector #3 Output Signal
50. Ground for Fuel System
51. Ground for Ignition System
52. Stick Coil #4 Output Signal

DFI Servicing Precautions

There are a number of important precautions that should be followed servicing the DFI system.

- This DFI system is designed to be used with a 12 V sealed battery as its power source. Do not use any other battery except for a 12 V sealed battery as a power source.
- Do not reverse the battery cable connections. This will damage the ECU.
- To prevent damage to the DFI parts, do not disconnect the battery cables or any other electrical connections when the ignition SW (switch) is on, or while the engine is running.
- Take care not to short the leads that are directly connected to the battery positive (+) terminal to the chassis ground.
- When charging, remove the battery from the motorcycle. This is to prevent ECU damage by excessive voltage.
- Whenever the DFI electrical connections are to be disconnected, first turn off the ignition SW (switch). Conversely, make sure that all the DFI electrical connections are firmly reconnected before starting the engine.
- Do not turn the ignition SW ON while any of the DFI electrical connectors are disconnected. The ECU memorizes service codes.
- Do not spray water on the electrical parts, DFI parts, connectors, leads, and wiring.
- If a transceiver is installed on the motorcycle, make sure that the operation of the DFI system is not influenced by electric wave radiated from the antenna. Check operation of the system with the engine at idle. Locate the antenna as far as possible away from the ECU.
- When any fuel hose is disconnected, do not turn on the ignition SW. Otherwise, the fuel pump will operate and fuel will spout from the fuel hose.
- Do not operate the fuel pump if the pump is completely dry. This is to prevent pump seizure.
- Before removing the fuel system parts, blow the outer surfaces of these parts clean with compressed air.
- When any fuel hose is disconnected, fuel may spout out by residual pressure in the fuel line. Cover the hose joint with a piece of clean cloth to prevent fuel spillage.
- When installing the fuel hoses, avoid sharp bending, kinking, flattening or twisting, and route the fuel hoses with a minimum of bending so that the fuel flow will not be obstructed.
- Route the hoses according to Cable, Wire, and Hose Routing section in the General Information chapter.
- To prevent corrosion and deposits in the fuel system, do not add to fuel any fuel antifreeze chemicals.
- Replace the fuel hose if it has been sharply bent or kinked.

DFI Servicing Precautions

○The fuel hose [A] is designed to be used through out the motorcycle's life without any maintenance, however, if the motorcycle is not properly handled, the high pressure inside the fuel line can cause fuel to leak or the hose to burst. Bend and twist the fuel hose while examining it.

★Replace the hose if any cracks or bulges are noticed.

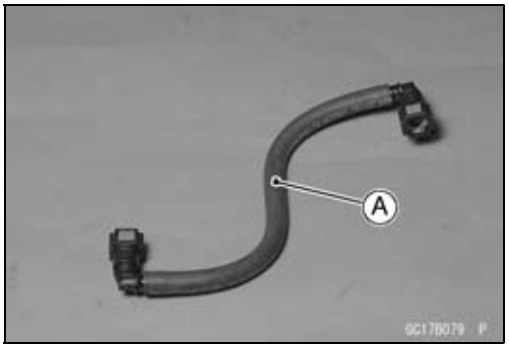

○To maintain the correct fuel/air mixture (F/A), there must be no inlet air leaks in the DFI system. Be sure to install the oil filler plug [A] after filling the engine oil.

Clutch Cover [B]

Torque - Oil Filler Plug: 1.5 N·m (0.15 kgf·m, 13 in·lb)

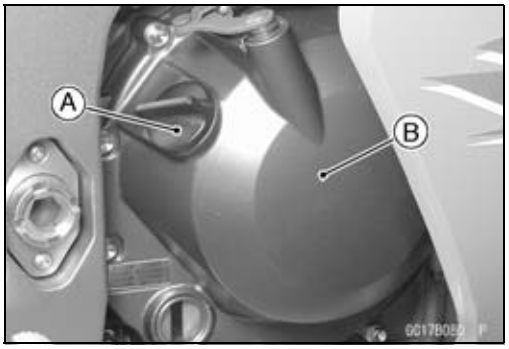

Troubleshooting the DFI System

Outline

When an abnormality in the system occurs, the FI indicator LED (Light Emitting Diode) light goes on to alert the rider on the meter panel. In addition, the condition of the problem is stored in the memory of the ECU (electronic control unit). With the engine stopped and turned in the self-diagnosis mode, the service code [A] is indicated by the number of times the FI indicator LED light blinks.

When due to a malfunction, the FI indicator LED light remains lit, ask the rider about the conditions [B] under which the problem occurred and try to determine the cause [C]. Don't rely solely on the DFI self-diagnosis function, use common sense; first conduct a pre-diagnosis inspection, check the ECU for ground and power supply, the fuel line for no fuel leaks, and for correct pressure. The pre-diagnosis items are not indicated by the FI indicator LED light.

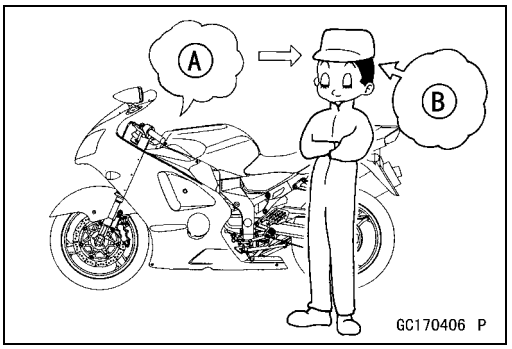

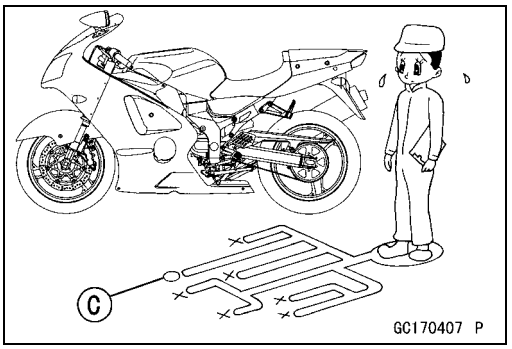

Even when the DFI system is operating normally, the FI indicator LED light [A] may light up under strong electrical interference. No remedy needed. Turn the ignition SW (switch) OFF to stop the indicator light.

When the FI indicator LED light goes on and the motorcycle is brought in for repair, check the service codes.

When the repair has been done, the LED light doesn't go on. But the service codes stored in memory are not erased to preserve the problem history, and the LED light can display the codes in the self-diagnosis mode. The problem history is referred when solving unstable problems.

Much of the DFI system troubleshooting work consists of confirming continuity of the wiring. The DFI parts are assembled and adjusted with precision, and it is impossible to disassemble or repair them.

- When checking the DFI parts, use a digital meter which can be read two decimal place voltage or resistance.

○Remove:
  Seats (see Frame chapter)

○The DFI part connectors have seals, including the ECU. When measuring the input or output voltage with the connector joined, use the needle adapter set. Insert the needle adapter inside the seal until the needle adapter reaches the terminal (for example, ECU is shown.).
  Digital Meter [A]

Special Tool - Needle Adapter Set: 57001–1457

CAUTION
Tape the leads to prevent short circuit of the leads.

Troubleshooting the DFI System

○After measurement, remove the needle adapters and apply silicone sealant to the seals [A] of the connector [B] for waterproofing.

Silicone Sealant (Kawasaki Bond: 56019-120)

Seals of Connector

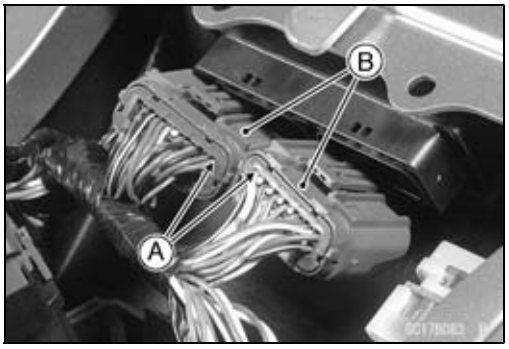

- Always check battery condition before replacing the DFI parts. A fully charged battery is a must for conducting accurate tests of the DFI system.
- Trouble may involve one or in some cases all items. Never replace a defective part without determining what CAUSED the problem. If the problem was caused by some other item or items, they too must be repaired or replaced, or the new replacement part will soon fail again
- Measure coil winding resistance when the DFI part is cold (at room temperature)
- Do not adjust or remove the throttle sensor.
- Do not directly connect a 12 V battery to a fuel injector. Insert a resistor (5 ~ 7 Ω) or a bulb (12 V × 3 ~ 3.4 W) in series between the battery and the injector.
- The DFI parts have been adjusted and set with precision. Therefore, they should be handled carefully, never strike sharply, as with a hammer, or allowed to drop on a hard surface. Such a shock to the parts can damage them.
- Check wiring and connections from the ECU connector to the suspected faulty DFI parts, using the hand tester (special tool, analog tester) rather than a digital tester.

  Special Tool - Hand Tester: 57001–1394
- Make sure all connectors in the circuit are clean and tight, and examine wires for signs of burning, fraying, etc. Deteriorated leads and bad connections can cause reappearance of problems and unstable operation of the DFI system.

★If any wiring is deteriorated, replace the wiring.

Troubleshooting the DFI System

- Pull each connector [A] apart and inspect it for corrosion, dirt, and damage.

★If the connector is corroded or dirty, clean it carefully. If it is damaged, replace it. Connect the connectors securely.

- Check the wiring for continuity.

○Use the wiring diagram to find the ends of the lead which is suspected of being a problem.

○Connect the hand tester between the ends of the leads.

○Set the tester to the × 1 Ω range, and read the tester.

★If the tester does not read 0 Ω, the lead is defective. Replace the lead or the main harness or the sub harness.

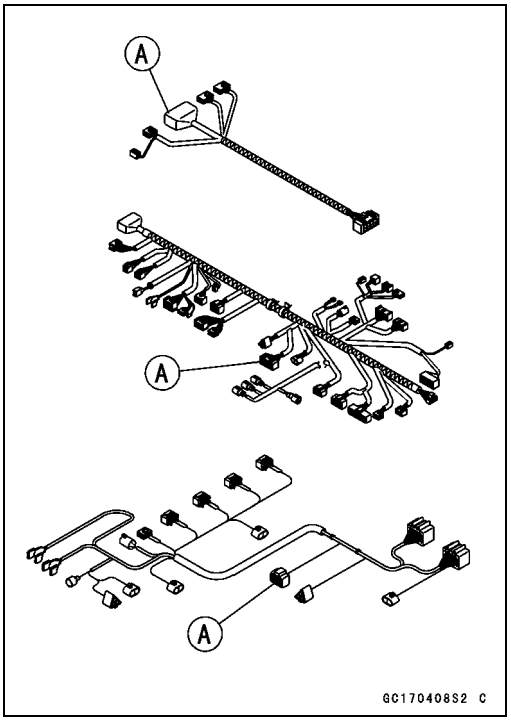

○If both ends of a harness [A] are far apart, ground [B] the one end [C], using a jumper lead [D] and check the continuity between the end [E] and the ground [F]. This enables to check a long harness for continuity. If the harness is open, repair or replace the harness.

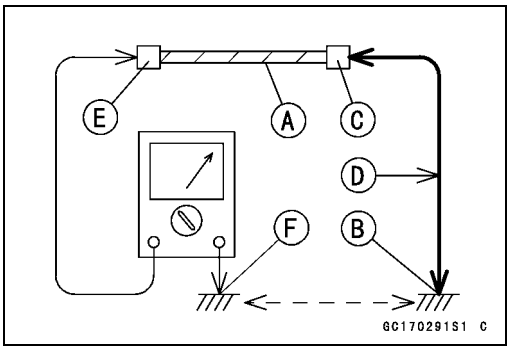

- Narrow down suspicious locations by repeating the continuity tests from the ECU connectors.

★If no abnormality is found in the wiring or connectors, the DFI parts are the next likely suspects. Check the part, starting with input and output voltages. However, there is no way to check the ECU itself.

★If an abnormality is found, replace the affected DFI part.

★If no abnormality is found in the wiring, connectors, and DFI parts, replace the ECU.

○The diagnosis flow chart illustrates the above procedures.

○After inspection, be sure to connect all the DFI electrical connectors. Do not turn the ignition SW ON while the DFI electrical connectors and ignition system connectors are disconnected. Otherwise, the ECU memorizes service codes as open circuit.

○Lead Color Codes:

BK: Black	G: Green	P: Pink
BL: Blue	GY: Gray	PU: Purple
BR: Brown	LB: Light blue	R: Red
CH: Chocolate	LG: Light green	W: White
DG: Dark green	O: Orange	Y: Yellow

Troubleshooting the DFI System

○Electrical Connectors:
Female Connectors [A]

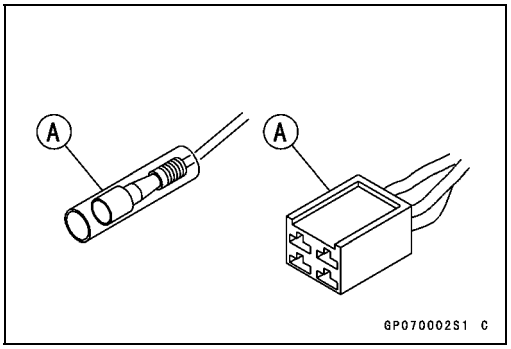

Male Connectors [B]

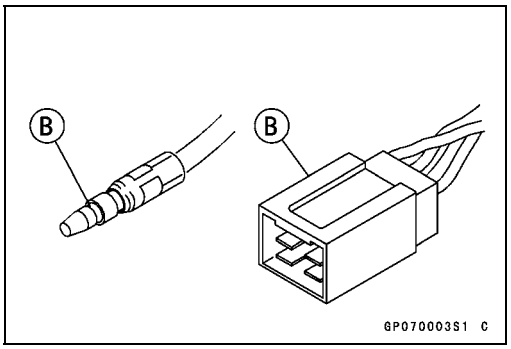

Troubleshooting the DFI System

DFI Diagnosis Flow Chart

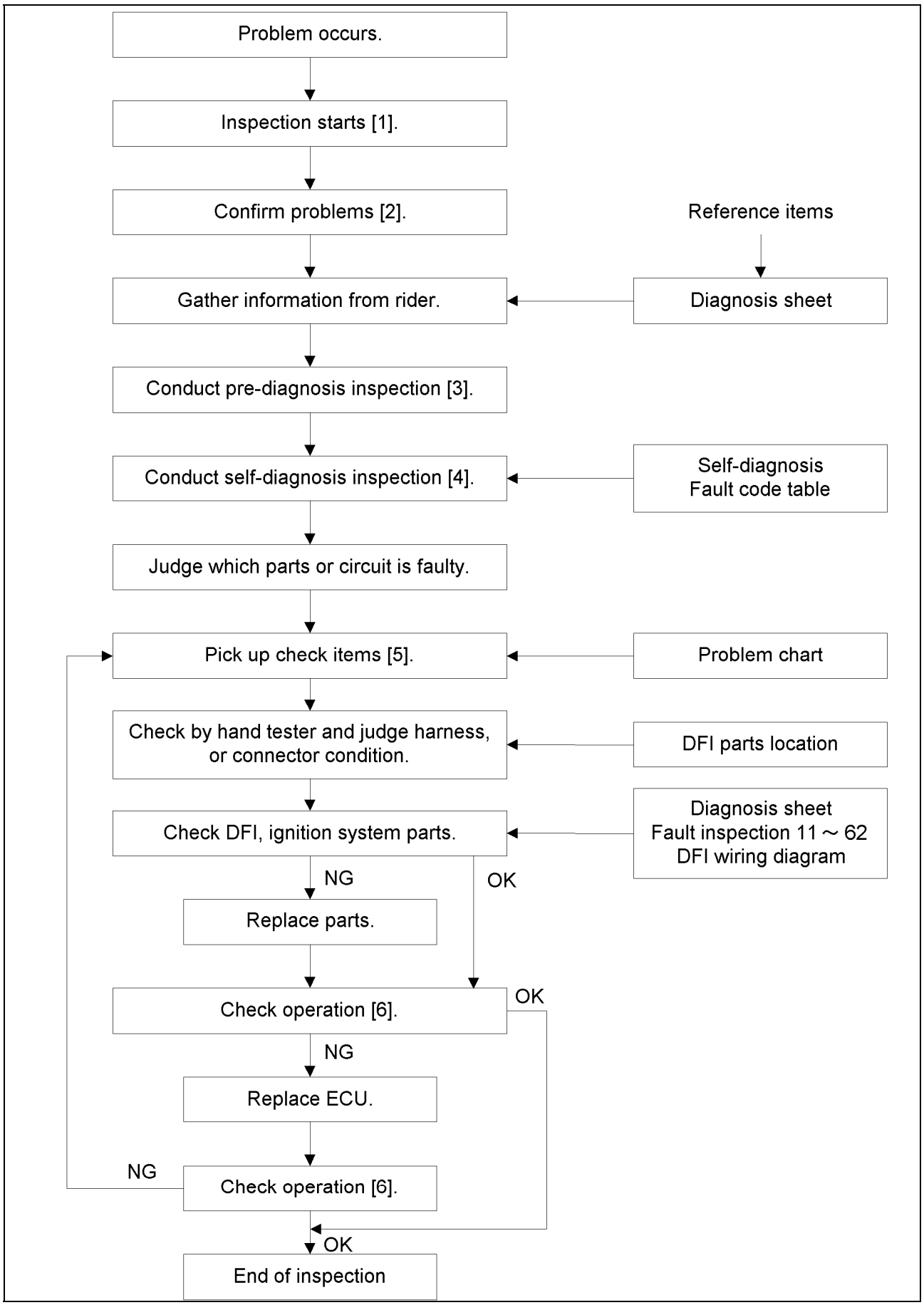

Troubleshooting the DFI System

Notes:
OK: No problem.
NG: Problem exists.

1. Inspection starts.
   - An abnormality occurs in the DFI system, and the FI indicator LED light goes on to alert the rider.
   - Bring the motorcycle into the shop.
2. Confirm problems.
   - Reproduce the problems if possible.
3. Conduct pre-diagnosis inspection.
   - The pre-diagnosis inspection items are not handled by self-diagnosis. Check the problem before self-diagnosis, considering the symptoms of the problem.
   - Pre-diagnosis Inspection Items

     ECU Power Supply Inspection
     ECU Fuse Inspection
     ECU Main Relay Inspection
     FI Indicator LED Light Operation Inspection
     Fuel Pressure Inspection
     Fuel Flow Rate Inspection
     Fuel Line Leakage Inspection
     Fuel Injectors and Fuel Pump Leakage Inspection
4. Conduct self-diagnosis.
   - Enter the self-diagnosis mode and count the blinks of the FI indicator LED light to read the service code.
5. Check items.
   - Decide the faulty part, referring to the problem chart.
   - Decide the check procedure for each faulty part, referring to each section (Fault Inspection 11 ~ 62).
6. Operation check.
   - Make sure the FI indicator LED light goes off.
   - If the problem is related to startability or idle stability, idle the engine to confirm that the DFI system and the ignition system are operating correctly.
   - If the problem is related to driveability, ride the motorcycle at 30 km/h (18 mph) or above to confirm that the DFI system and the ignition system are operating correctly.

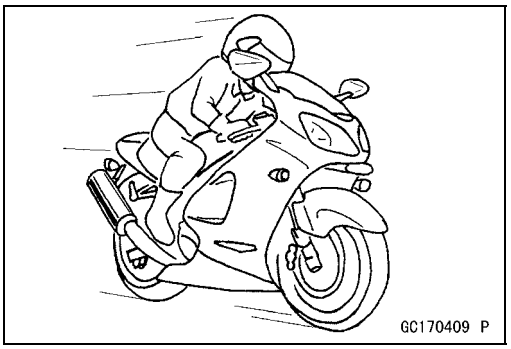

Troubleshooting the DFI System

Inquiries to Rider

- Each rider reacts to problems in different ways, so it is important to confirm what kind of symptoms the rider has encountered.
- Try to find out exactly what problem occurred under exactly what conditions by asking the rider; knowing this information may help you reproduce the problem.
- The diagnosis sheet will help prevent you from overlooking any areas, and will help you decide if it is a DFI system problem, or a general engine problem.

Diagnosis Keys

What –	Motorcycle model
When –	Date (frequency of problem)
Where –	Road conditions, altitude
How –	Riding conditions
	Environment

Troubleshooting the DFI System

Sample Diagnosis Sheet

Rider name:	**Registration No. (license plate No.):**	**Year of initial registration:**
Model:	**Engine No.:**	**Frame No.:**
Date problem occured:		**Mileage:**
Environment when problem occurred.		
Weather	□ fine, □ cloudy, □ rain, □ snow, □ always, □ other:	
Temperature	□ hot, □ warm, □ cold, □ very cold, □ always	
Problem frequency	□ chronic, □ often, □ once	
Road	□ street, □ highway, □ mountain road (□ uphill, □ downhill), □ bumpy, □ pebble	
Altitude	□ normal, □ high (about 1000 m or more)	
Motorcycle conditions when problem occurred.		
FI indicator LED light	□ light up immediately after ignition SW ON, and goes off after 1 ~ 2 seconds (normal).	
	□ lights blinks immediately after ignition SW ON, and stays on (DFI problem)	
	□ lights up immediately after ignition SW ON, but goes off after about 10 seconds (DFI problem).	
	□ unlights (LED light, ECU or its wiring fault).	
	□ sometimes lights up (probably wiring fault).	
Starting difficulty	□ starter motor not rotating.	
	□ starter motor rotating but engine doesn't turn over.	
	□ starter motor and engine don't turn over.	
	□ no fuel flow (□ no fuel in tank, □ no fuel pump sound).	
	□ engine flooded (do not crank engine with throttle opened, which promotes engine flooding).	
	□ no spark.	
	□ choke lever is not pulled fully when using the lever (pull it fully when using).	
	□ other:	
Engine stalls	□ right after starting.	
	□ when opening throttle grip.	
	□ when closing throttle grip.	
	□ when moving off.	
	□ when stopping the motorcycle.	
	□ when cruising.	
	□ other:	

Troubleshooting the DFI System

Poor running at low speed	□ choke lever pulled out fully (push it in fully).
	□ very low choke speed.
	□ very low idle speed, □ very high idle speed, □ rough idle speed.
	□ battery voltage is low (charge the battery).
	□ spark plug loose (tighten it).
	□ spark plug dirty, broken, or gap maladjusted (remedy it).
	□ backfiring.
	□ afterfiring.
	□ hesitation when acceleration.
	□ engine oil viscosity too high.
	□ brake dragging.
	□ engine overheating.
	□ clutch slipping.
	□ other:
Poor running or no power at high speed	□ choke lever pulled out fully (push it in fully).
	□ spark plug loose (tighten it).
	□ spark plug dirty, broken, or gap maladjusted (remedy it).
	□ spark plug incorrect (replace it).
	□ knocking (fuel poor quality or incorrect, → use high-octane gasoline).
	□ brake dragging.
	□ clutch slipping.
	□ engine overheating.
	□ engine oil level too high.
	□ engine oil viscosity too high.
	□ other:

DFI System Troubleshooting Guide

NOTE

- *This is not an exhaustive list, giving every possible cause for each problem listed. It is meant simply as a rough guide to assist the troubleshooting for some of the more common difficulties.*
- *The ECU may be involved in the DFI electrical and ignition system troubles. If these parts and circuits are checked out good, be sure to check the ECU for ground and power supply. If the ground and power supply are checked good, replace the ECU.*

Engine Doesn't Start, Starting Difficulty

Symptoms or possible Causes	Actions (chapter)
Starter motor not rotating:	
Ignition and engine stop switches not ON	Turn both switches ON.
Starter lockout switch or neutral switch trouble	Inspect (see chapter 16)
Starter motor trouble	Inspect (see chapter 16).
Battery voltage low	Inspect and charge (see chapter 16).
Starter relays not contacting or operating	Inspect the starter relay (see chapter 16).
Starter button not contacting	Inspect and replace (see chapter 16).
Starter system wiring open or shorted	Inspect the wiring (see chapter 16).
Ignition switch trouble	Inspect and replace (see chapter 16).
Engine stop switch trouble	Inspect and repair or replace (see chapter 16).
Main 30A or ignition fuse blown	Inspect and replace (see chapter 16).
Starter motor rotating but engine doesn't turn over :	
Starter clutch trouble	Inspect (see chapter 9).
Starter idle gear trouble	Inspect (see chapter 9).
Engine won't turn over :	
Valve seizure	Inspect and replace (see chapter 5).
Cylinder, piston seizure	Inspect and replace (see chapter 5).
Camshaft seizure	Inspect and replace (see chapter 5).
Connecting rod small end seizure	Inspect and replace (see chapter 9).
Connecting rod big end seizure	Inspect and replace (see chapter 9).
Crankshaft seizure	Inspect and replace (see chapter 9).
Transmission gear or bearing seizure	Inspect and replace (see chapter 9).
Balancer bearing seizure	Inspect and replace (see chapter 9).
No fuel flow :	
No or little fuel in tank	Supply fuel (see Owner's Manual).
Fuel pump not rotating	Inspect (see chapter 3).
Fuel injector trouble	Inspect and replace (see chapter 3).
Fuel tank air vent obstructed	Inspect and repair (see chapter 3).
Fuel filter or pump screen clogged	Inspect and replace fuel pump (see chapter 3).
Fuel pressure regulator clogged	Inspect and replace fuel pump (see chapter 3).
Fuel line clogged	Inspect and repair (see chapter 3).
Engine flooded :	
Spark plug dirty, broken or gap maladjusted	Clean spark plugs and adjust plug gap (see chapter 2).
Starting technique faulty	When flooded, don't crank engine with throttle fully opened.
No spark or spark weak :	

DFI System Troubleshooting Guide

Symptoms or possible Causes	Actions (chapter)
Ignition and engine stop switches not ON	Turn both switches ON .
Clutch lever not pulled in and gear not in neutral whether sidestand up or not	Pull the lever in and shift the gear in neutral.
Though clutch lever pulled in, sidestand up and gear not in neutral	Sidestand down and clutch lever pulled in whether gear in neutral or not
Vehicle-down sensor coming off	Reinstall (see chapter 3).
Vehicle-down sensor trouble	Inspect (see chapter 3) .
ECU ground or power supply trouble	Inspect (see chapter 3) .
Battery voltage low	Inspect and charge (see chapter 16).
Spark plug dirty, broken or gap maladjusted	Clean spark plug and adjust plug gap (see chapter 2).
Spark plug cap trouble	Inspect stick coil (see chaper 16).
Spark plug cap shorted or not in good contact	Reinstall or inspect stick coil (see chapter 16).
Spark plug incorrect	Replace it with the correct plug (see chapter 16).
IC igniter in ECU trouble	Inspect (see chapter 16).
Neutral, starter lockout or sidestand switch trouble	Inspect each switch (see chapter 16).
Crankshaft sensor trouble	Inspect (see chapter 16).
Stick coil trouble	Inspect (see chapter 16).
Ignition switch shorted	Inspect and replace (see chapter 16).
Engine stop switch shorted	Inspect and repair or replace (see chapter 16) .
Starter system wiring shorted or open	Inspect and repair or replace (see chapter 16).
Main 30A or ignition fuse blown	Inspect and replace (see chapter 16).
Fuel/air mixture incorrect :	
Air cleaner clogged, poorly sealed or missing	Clean or reinstall (see chapter 3).
Leak from oil filler cap, crankcase breather hose or air cleaner drain hose	Inspect and repair or replace (see chapter 3).
Water or foreign matter in fuel	Change fuel. Inspect and clean fuel system (see chapter 3).
Fuel pressure regulator trouble	Inspect fuel pressure and replace fuel pump (see chapter 3).
Main throttle sensor trouble	Inspect (see chapter 3).
Fuel pressure may be low	Inspect (see chapter 3).
Fuel pump trouble	Inspect (see chapter 3).
Fuel injector trouble	Inspect (see chapter 3).
Inlet air pressure sensor trouble	Inspect (see chapter 3).
Atmospheric pressure sensor trouble	Inspect (see chapter 3).
Inlet air temperature sensor trouble	Inspect (see chapter 3).
Water temperature sensor trouble	Inspect (see chapter 3).
Crankshaft sensor trouble	Inspect (see chapter 3).
Compression low :	
Spark plug loose	Reinstall (see chapter 16).
Cylinder head not sufficiently tightened down	Tighten (see chapter 5).
Cylinder, piston worn	Inspect and replace (see chapter 5).
Piston ring bad (worn, weak, broken or sticking)	Inspect and replace (see chapter 5).

DFI System Troubleshooting Guide

Symptoms or possible Causes	Actions (chapter)
Piston ring /groove clearance excessive	Inspect and replace (see chapter 5).
Cylinder head gasket damaged	Replace (see chapter 5).
Cylinder head warped	Inspect and replace (see chapter 5).
No valve clearance	Adjust (see chapter 2).
Valve guide worn	Inspect and replace (see chapter 5).
Valve spring broken or weak	Inspect and replace (see chapter 5).
Valve not seating properly (valve bent, worn or carbon accumulating on seating surface)	Inspect and repair or replace (see chapter 5).

Poor Running at Low Speed

Symptoms or Possible Causes	Actions (chapter)
Spark weak :	
Battery voltage low	Inspect and charge (see chapter 16).
Spark plug dirty, broken or gap maladjusted	Clean spark plugs and adjust plug gap (see chapter 2).
Spark plug cap trouble	Inspect the stick coil (see chapter 16).
Spark plug cap shorted or not in good contact	Reinstall or inspect stick coil (see chapter 16).
Spark plug incorrect	Replace it with the correct plug (see chapter 16).
IC igniter in ECU trouble	Inspect (see chapter 16).
Crankshaft sensor trouble	Inspect (see chapter 16).
Stick coil trouble	Inspect (see chapter 16).
Fuel / air mixture incorrect :	
Little fuel in tank	Supply fuel (see Owner's Manual).
Air cleaner clogged, poorly sealed, or missing	Clean element or inspect sealing (see chapter 3).
Air cleaner duct loose	Reinstall (see chapter 3).
Air cleaner O-ring damaged	Replace (see chapter 3).
Fuel tank air vent obstructed	Inspect and repair (see chapter 3).
Throttle body assy loose	Reinstall (see chapter 3).
Throttle body assy O-ring damage	Replace (see chapter 3).
Choke lever pulled	Push it (see chapter 3).
Fuel filter or pump screen clogged	Inspect and replace fuel pump (see chapter 3).
Fuel pressure regulator clogged	Inspect fuel pressure and replace fuel pump (see chapter 3).
Fuel line clogged	Inspect and repair (see chapter 3).
Inlet air pressure sensor trouble	Inspect (see chapter 3).
Inlet air temperature sensor trouble	Inspect (see chapter 3).
Thermostat trouble	Inspect and replace (see chapter 4).
Unstable (rough) idling :	
Fuel injector trouble	Inspect (see chapter 3).
Main throttle sensor trouble	Inspect (see chapter 3).
Crankshaft sensor trouble	Inspect (see chapter 3).
Throttle valves not synchronizing	Inspect (see chapter 2).
Inlet air temperature sensor trouble	Inspect (see chapter 3).
Water temperature sensor trouble	Inspect (see chapter 3).

DFI System Troubleshooting Guide

Symptoms or Possible Causes	Actions (chapter)
Atmospheric pressure sensor trouble	Inspect (see chapter 3).
Fuel pressure too low or too high	Inspect (see chapter 3).
Battery voltage low	Inspect and charge (see chapter 16).
Incorrect idle speed :	
Water temperature sensor trouble	Inspect (see chapter 3).
Main throttle sensor trouble	Inspect (see chapter 3).
Engine stalls easily :	
Fuel pump trouble	Inspect (see chapter 3).
Fuel injector trouble	Inspect (see chapter 3).
Main throttle sensor trouble	Inspect (see chapter 3).
Camshaft position sensor trouble	Inspect (see chapter 3).
Fuel pressure too low or too high	Inspect (see chapter 3).
Inlet air pressure sensor trouble	Inspect (see chapter 3).
Water temperature sensor trouble	Inspect (see chapter 3).
Inlet air temperature sensor trouble	Inspect (see chapter 3).
Fuel line clogged	Inspect and repair (see chapter 3).
Fuel pressure too low or too high	Inspect (see chapter 3).
Fuel pressure regulator trouble	Inspect fuel pressure and replace fuel pump (see chapter 3).
Crankshaft sensor trouble	Inspect (see chapter 16).
Stick coil trouble	Inspect (see chapter 16).
Compression Low :	
Spark plug loose	Reinstall (see chapter 16).
Cylinder head not sufficiently tightened down	Tighten (see chapter 5).
No valve clearance	Adjust (see chapter 2).
Cylinder, piston worn	Inspect and replace (see chapter 5).
Piston ring bad (worn, weak, broken or sticking)	Inspect and replace (see chapter 5).
Piston ring /groove clearance excessive	Inspect and replace (see chapter 5).
Cylinder head gasket damaged	Replace (see chapter 5).
Cylinder head warped	Inspect and replace (see chapter 5).
Valve guide worn or stem seal damaged	Inspect and replace (see chapter 5).
Valve spring broken or weak	Inspect and replace (see chapter 5).
Valve not seating properly (valve bent, worn or carbon accumulating on seating surface)	Inspect and repair or replace (see chapter 5).
Camshaft cam worn	Inspect and replace (see chapter 5).
Hesitation :	
Too low fuel pressure	Inspect (see chapter 3).
Clogged fuel line	Inspect and repair (see chapter 3).
Cracked or obstructed inlet air pressure sensor hose	Inspect and repair or replace (see chapter 3).
Fuel pump trouble	Inspect (see chapter 3).
Fuel injector trouble	Inspect (see chapter 3).
Inlet air temperature sensor trouble	Inspect (see chapter 3).
Main throttle sensor trouble	Inspect (see chapter 3).
Subthrottle sensor trouble	Inspect (see chapter 3).

DFI System Troubleshooting Guide

Symptoms or Possible Causes	Actions (chapter)
Subthrottle valve actuator trouble	Inspect (see chapter 3).
Water temperature sensor trouble	Inspect (see chapter 3).
Atmospheric pressure sensor trouble	Inspect (see chapter 3).
Inlet air pressure sensor trouble	Inspect (see chapter 3).
Loose injector connectors	Remedy (see chapter 3).
Crankshaft sensor trouble	Inspect and repair or replace (see chapter 16).
Stick coil trouble	Inspect and repair or replace (see chapter 16).
Loose terminal of battery (–) lead or engine ground lead	Inspect and repair (see chapter 16).
Delay of ignition timing	Inspect crankshaft sensor and IC igniter in ECU (see chapter 16).
Poor acceleration :	
Choke lever pulled	Push it (see chapter 3).
Too low fuel pressure	Inspect (see chapter 3).
Water or foreign matter in fuel	Change fuel. Inspect and clean fuel system (see chapter 3).
Clogged fuel filter or pump screen	Inspect and replace fuel pump (see chapter 3).
Fuel pump trouble	Inspect (see chapter 3).
Fuel injector trouble	Inspect (see chapter 3).
Inlet air temperature sensor trouble	Inspect (see chapter 3).
Water temperature sensor trouble	Inspect (see chapter 3).
Atmospheric pressure sensor trouble	Inspect (see chapter 3).
Subthrottle sensor trouble	Inspect (see chapter 3).
Subthrottle valve actuator trouble	Inspect (see chapter 3).
Stick coil trouble	Inspect and replace (see chapter 16).
Engine oil level to high	Repair (see chapter 7).
Spark plug dirty, broken or gap maladjusted	Clean spark plugs and adjust plug gap (see chapter 2).
Stumble :	
Too low fuel pressure	Inspect (see chapter 3).
Fuel injector trouble	Inspect (see chapter 3).
Main throttle sensor malfunction	Inspect (see chapter 3).
Subthrottle sensor trouble	Inspect (see chapter 3).
Subthrottle valve actuator trouble	Inspect (see chapter 3).
Water temperature sensor trouble	Inspect (see chapter 3).
Inlet air pressure sensor trouble	Inspect (see chapter 3).
Surge :	
Unstable fuel pressure	Fuel pressure regulator trouble (Inspect and replace fuel pump) or kinked fuel line (Inspect and repair fuel line) (see chapter 3).
Fuel injector trouble	Inspect (see chapter 3).
Water temperature sensor trouble	Inspect (see chapter 3).
Backfiring when deceleration :	
Spark plug dirty, broken or gap maladjusted	Clean spark plugs and adjust plug gap (see chapter 2).

DFI System Troubleshooting Guide

Symptoms or Possible Causes	Actions (chapter)
Too low fuel pressure	Inspect (see chapter 3).
Fuel pump trouble	Inspect (see chapter 3).
Main throttle sensor trouble	Inspect (see chapter 3).
Inlet air temperature sensor trouble	Inspect (see chapter 3).
Water temperature sensor trouble	Inspect (see chapter 3).
Atmospheric pressure sensor trouble	Inspect (see chapter 3).
Inlet air pressure sensor trouble	Inspect (see chapter 3).
Vacuum switch valve broken	Inspect and replace (see chapter 5).
Air suction valve trouble	Inspect and replace (see chapter 5).
After fire :	
Crankshaft sensor trouble	Inspect (see chapter 16).
Spark plug burned or gap maladjusted	Adjust plug gap or replace plug (see chapter 2).
Inlet air temperature sensor trouble	Inspect (see chapter 3).
Water temperature sensor trouble	Inspect (see chapter 3).
Atmospheric pressure sensor trouble	Inspect (see chapter 3).
Inlet air pressure sensor trouble	Inspect (see chapter 3).
Fuel injector trouble	Inspect (see chapter 3).
Run-on (dieseling) :	
Ignition switch trouble	Inspect and replace (see chapter 16).
Engine stop switch trouble	Inspect and repair or replace (see chapter 16).
Fuel injector trouble	Inspect (see chapter 3).
Loose terminal of battery (–) lead or ECU ground lead	Inspect and repair (see chapter 16).
Carbon accumulating on valve seating surface	Repair (see chapter 5).
Engine overheating	(see Overheating of Troubleshooting Guide, see chapter 17)
Other :	
Engine oil viscosity too high	Change (see chapter 2).
Drive train trouble	Inspect drive chain (see chapter 2) and sprocket (see chapter 11).
Brake dragging	Inspect caliper fluid seal damage or clogging of master cylinder relief and supply ports (see chapter 12).
Clutch slipping	Inspect friction plates for wear (see chapter 6).
Engine overheating	(see Overheating of Troubleshooting Guide, see chapter 17)
Vacuum switch valve trouble	Inspect and replace (see chapter 5).
Air suction valve trouble	Inspect and replace (see chapter 5).
Intermittent any DFI fault and its recovery	Check that DFI connectors are clean and tight, and examine wires for signs of burning or fraying (see chapter 3).

DFI System Troubleshooting Guide

Poor Running or No Power at High Speed:

Symptoms or Possible Causes	Actions (chapter)
Firing incorrect :	
Spark plug dirty, broken or maladjusted	Clean spark plug and adjust plug gap (see chapter 2).
Spark plug cap trouble	Inspect stick coil (see chapter 16).
Spark plug cap shorted or not in good contact	Reinstall or inspect stick coil (see chapter 16).
Spark plug incorrect	Replace it with the correct plug (see chapter 16).
IC igniter in ECU trouble	Inspect (see chapter 16).
Crankshaft sensor trouble	Inspect (see chapter 16).
Stick coil trouble	Inspect (see chapter 16).
Fuel/air mixture incorrect :	
Choke lever pulled	Push it (see chapter 3).
Air cleaner clogged, poorly sealed, or missing	Clean element or inspect sealing (see chapter 3).
Air cleaner duct loose	Reinstall (see chapter 3).
Air cleaner O-ring damaged	Replace (see chapter 3).
Water or foreign matter in fuel	Change fuel. Inspect and clean fuel system (see chapter 3).
Throttle body assy loose	Reinstall (see chapter 3).
Throttle body assy O-ring damaged	Replace (see chapter 3).
Fuel tank air vent obstructed	Inspect and repair (see chapter 3).
Fuel line clogged	Inspect and repair (see chapter 3).
Fuel pump operates intermittently and often DFI fuse blows.	Pump bearings may wear. Replace the pump (see chapter 3).
Fuel pump trouble	Inspect (see chapter 3).
Inlet air temperature sensor trouble	Inspect (see chapter 3).
Main throttle sensor trouble	Inspect (see chapter 3).
Atmospheric pressure sensor trouble	Inspect (see chapter 3).
Inlet air pressure sensor trouble	Inspect (see chapter 3).
Cracked or obstructed inlet air pressure sensor hose	Inspect and repair or replace (see chapter 3).
Injector clogged	Visually inspect and replace (see chapter 3).
Compression low :	
Spark plug loose	Reinstall (see chapter 16).
Cylinder head not sufficiently tightened down	Tighten (see chapter 5).
No valve clearance	Adjust (see chapter 2).
Cylinder, piston worn	Inspect and replace (see chapter 5).
Piston ring bad (worn, weak, broken or sticking)	Inspect and replace (see chapter 5).
Piston ring /groove clearance excessive	Inspect and replace (see chapter 5).
Cylinder head gasket damaged	Replace (see chapter 5) .
Cylinder head warped	Inspect and replace (see chapter 5).
Valve spring broken or weak	Inspect and replace (see chapter 5).
Valve not seating properly (valve bent , worn or carbon accumulating on the seating surface)	Inspect and repair or replace (see chapter 5).
Knocking :	
Carbon built up in combustion chamber	Repair (see chapter 5).

DFI System Troubleshooting Guide

Symptoms or Possible Causes	Actions (chapter)
Fuel poor quality or incorrect (Use the gasoline recommended in the Owner's Manual)	Change fuel (see chapter 3).
Spark plug incorrect	Replace it with the correct plug (see chapter 16).
Stick coil trouble	Inspect (see chapter 16).
IC igniter in ECU trouble	Inspect (see chapter 16).
Inlet air temperature sensor trouble	Inspect (see chapter 3).
Atmospheric pressure sensor trouble	Inspect (see chapter 3).
Miscellaneous :	
Subthrottle sensor trouble	Inspect (see chapter 3).
Subthrottle valve actuator trouble	Inspect (see chapter 3).
Speed sensor trouble	Inspect (see chapter 3).
Throttle valves won't fully open	Inspect throttle cable and lever linkage (see chapter 3).
Brake dragging	Inspect caliper fluid seal damage or clogging of master cylinder relief and supply ports (see chapter 12).
Clutch slipping	Inspect friction plates for wear (see chapter 6).
Engine overheating - Water temperature sensor, crankshaft sensor or speed sensor trouble	(see Overheating of Troubleshooting Guide in chapter 17).
Engine oil level too high	Repair (see chapter 7).
Engine oil viscosity too high	Change (see chapter 3).
Drive train trouble	Inspect drive chain (see chapter 2) and sprockets (see chapter 11).
Camshaft cam worn	Inspect and replace (see chapter 5).
Vacuum switch valve trouble	Inspect and replace (see chapter 5).
Air suction valve trouble	Inspect and replace (see chapter 5).
Catalytic converters melt down due to muffler overheating (KLEEN)	Replace muffler (see chapter 5).
Exhaust Smokes Excessively :	
(White smokes)	
Piston oil ring worn	Inspect and replace (see chapter 5).
Cylinder worn	Inspect and replace (see chapter 5).
Valve oil seal damaged	Replace (see chapter 5).
Valve guide worn	Replace the guide (see chapter 5).
Engine oil level too high	Repair (see chapter 7).
(Black smoke)	
Air cleaner clogged	Clean (see chapter 3).
Choke lever pulled	Push it (see chapter 3).
Too high fuel pressure	Inspect (see chapter 3) .
Injector stuck open	Inspect (see chapter 3).
Water temperature sensor trouble	Inspect and replace (see chapter 3).
Inlet air temperature sensor trouble	Inspect and replace (see chapter 3).
(Brown smoke)	
Air cleaner duct loose	Reinstall (see chapter 3).
Air cleaner O-ring damaged	Replace (see chapter 3).

DFI System Troubleshooting Guide

Symptoms or Possible Causes	Actions (chapter)
Too low fuel pressure	Inspect fuel line and fuel pump (see chapter 3).
Water temperature sensor trouble	Inspect and replace (see chapter 3).
Inlet air temperature sensor trouble	Inspect and replace (see chapter 3)

ECU

CAUTION

Never drop the ECU, especially on a hard surface. Such a shock to the ECU can damage it.

ECU Removal

● Remove:
Seats (see Frame chapter)
Seat Cover (see Frame chapter)
Battery Leads
Bolts [A]
Storage Compartments [B]

○Lift up the rear part [C] of the storage compartments and then pull it rearward.

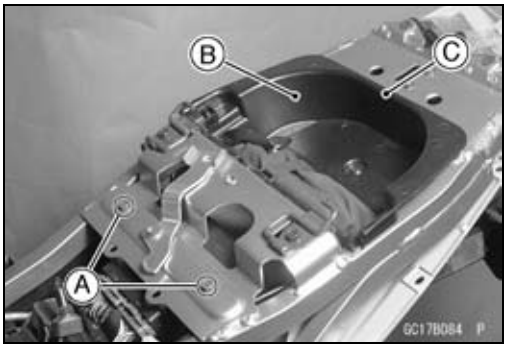

● Remove the following parts from the bracket.
Junction Box [A]
Starter Relay [B]
Turn Signal Relay [C]
Fuel Pump Relay [D]
ECU Main Relay [E]
Fuse Case [F]

● Disconnect the ECU lead connectors [G].

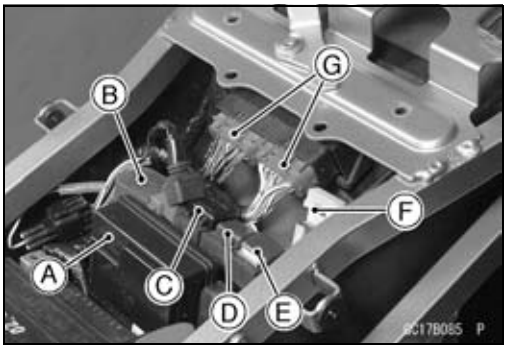

● Remove:
ECU [A]

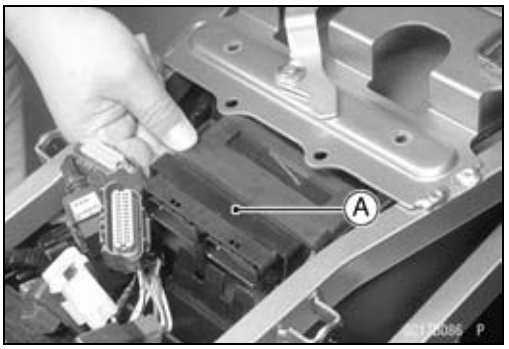

ECU Installation

● Connect the ECU connectors.

★If the rubber protector [A] is removed, install it.
ECU [B]

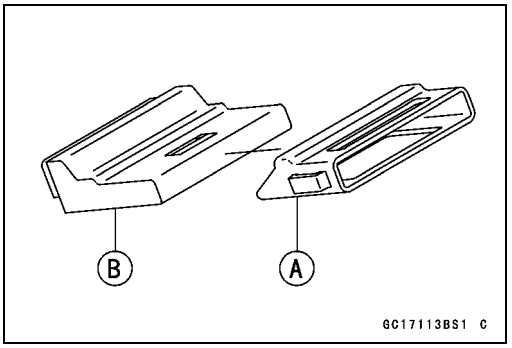

ECU

- Insert the projections [A] of the rear fender front into the slits [B] of the rubber protector.

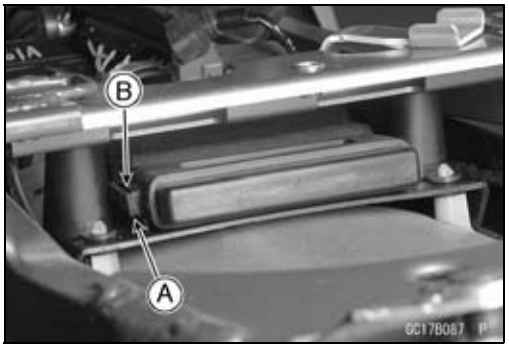

ECU Power Supply Inspection

- Visually inspect the terminals [A] of the ECU connectors.

★If the connector is clogged with mud or dust, blow it off with compressed air.

★Replace the main harness if the terminals of the main harness connectors are cracked, bent, or otherwise damaged.

★Replace the ECU if the terminals of the ECU connectors are cracked, bent, or otherwise damaged.

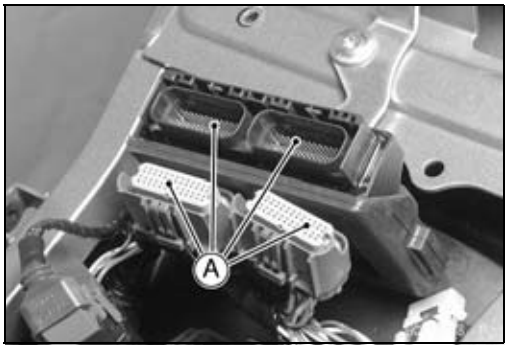

- With the ECU connectors [A] connected, check the following ground lead for continuity with the ignition SW OFF, using a tester and needle adapter set.

ECU Grounding Inspection

26, 50, or 51 (BK/Y) Terminal	⟷	**Battery (–) Terminal: 0 Ω**
Engine Ground	⟷	**Battery (–) Terminal: 0 Ω**

★If no continuity, check the connector, the engine ground lead, or main harness, and repair or replace them if necessary.

[B] Battery
[C] Tester

Special Tool - Needle Adapter Set: 57001–1457

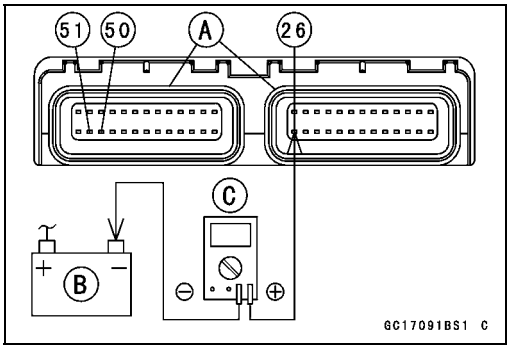

ECU

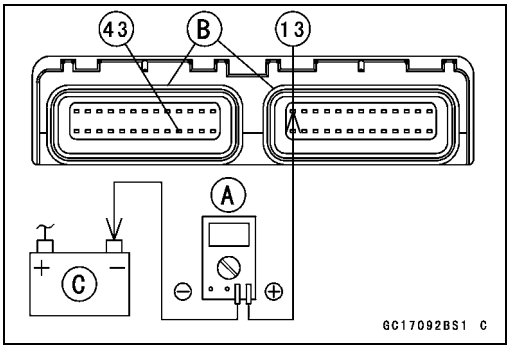

● Check the ECU power source voltage with a tester [A].
○Position the terminal in accordance with terminal numbers of ECU connectors [B] in this chapter figure.
Battery [C]

ECU Power Source Inspection
Tester

Connections:	**between 13 (W/Y) Terminal and Battery (–) Terminal**
	between 43 (W) Terminal and Battery (–) Terminal
Ignition SW OFF:	**13 (W/Y) Terminal 0 V,**
	43 (W) Terminal 12.5 V or more
Ignition SW ON:	**Battery Voltage (12.5 V or more)**

★If the tester does not read as specified, check the following:
Power Source Wiring (see wiring diagram below)
Main Fuse 30 A (see Electrical System chapter)
ECU Fuse 15 A (see DFI Power Source section)
ECU Main Relay (see DFI Power Source section)

ECU Power Source Circuit

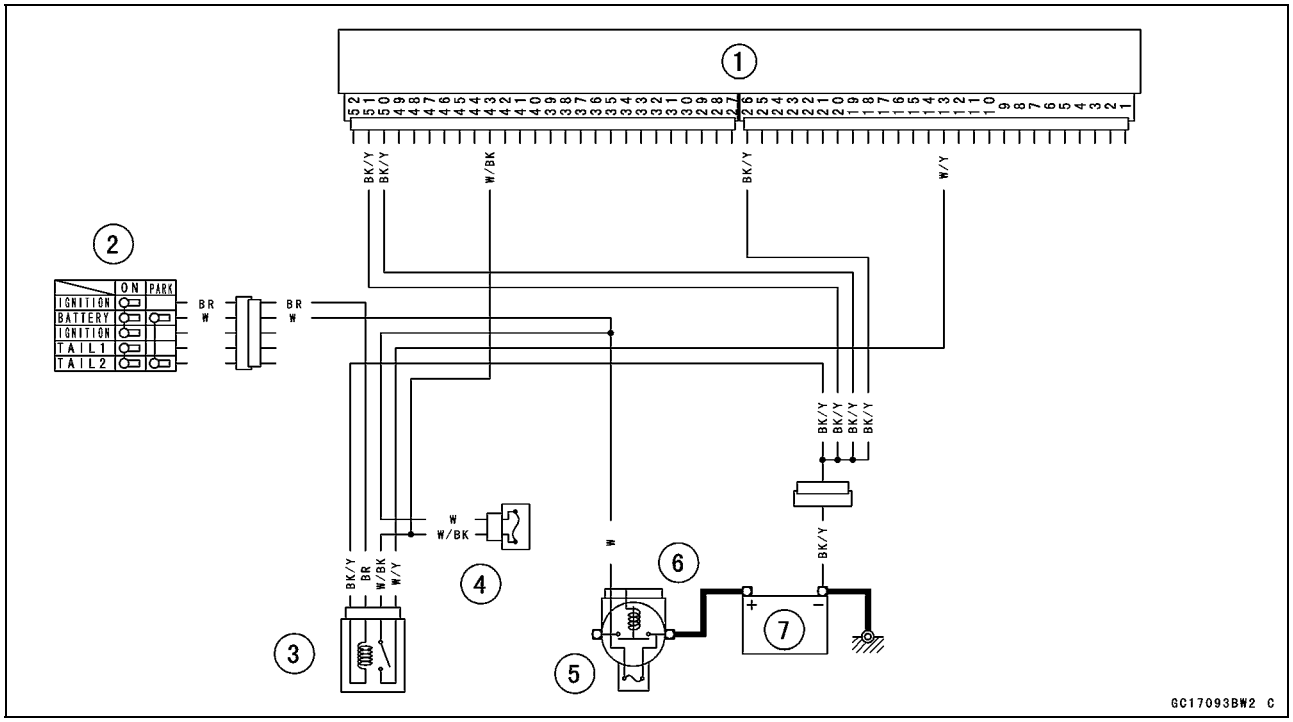

1. ECU
2. Ignition Switch
3. ECU Main Relay
4. ECU Fuse 15 A
5. Main Fuse 30 A
6. Starter Relay
7. Battery

DFI Power Source

ECU Fuse Removal

- Refer to the Electrical System chapter for the ECU fuse removal.

ECU Fuse Installation

★If a fuse fails during operation, inspect the DFI system to determine the cause, and then replace it with a new fuse of proper amperage.

- Refer to the Electrical System chapter for the ECU fuse installation.

ECU Fuse Inspection

- Refer to the Electrical System chapter for the ECU Fuse Inspection.

ECU Main Relay Removal

CAUTION
Never drop the relay, especially on a hard surface. Such a shock to the relay can damage it.

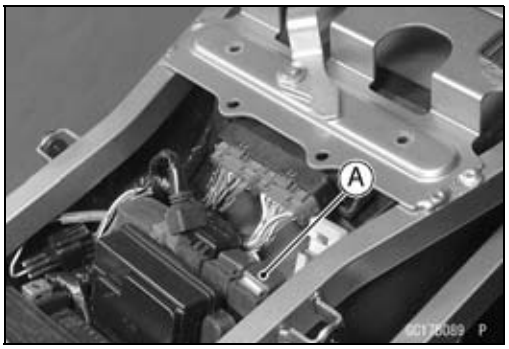

- Remove:
  Seats (see Frame chapter)
- Remove the ECU main relay [A] from the bracket and disconnect the connector.

ECU Main Relay Inspection

- Remove the ECU main relay (see above).
- Connect the hand tester [A] and one 12 V battery [B] to the relay connector [C] as shown.

Special Tool - Hand Tester: 57001–1394

Relay Coil Terminals [1] and [2]
Relay Switch Terminals [3] and [4]

Testing Relay

Tester range: 1 Ω range
Criteria: When battery is connected → 0 Ω
When battery is disconnected → ∞ Ω

★If the relay does not work as specified, replace the relay.

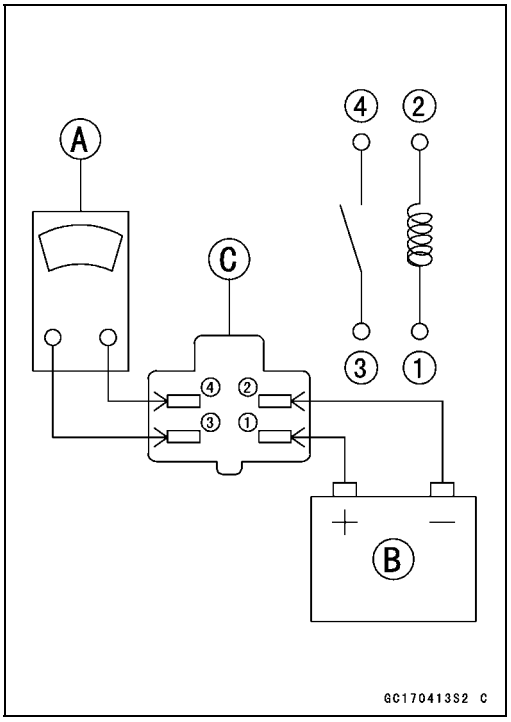

FI Indicator LED Light

Inspection Flow Chart

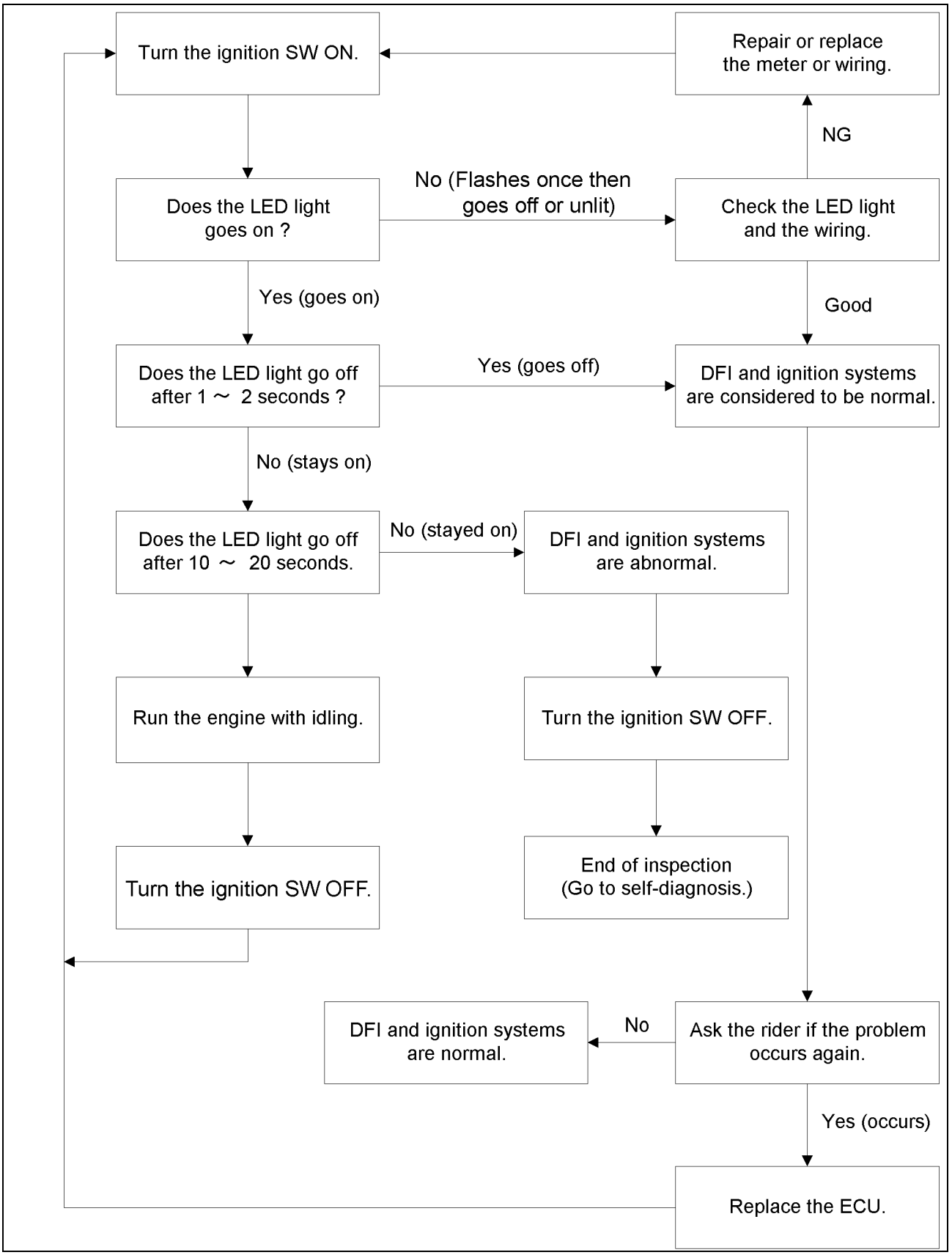

FI Indicator LED Light

LED Light Inspection

- Remove the meter unit (see Electrical System chapter).
- Using two auxiliary leads, supply battery power to the FI indicator LED light [A].
  12 V Battery [B]

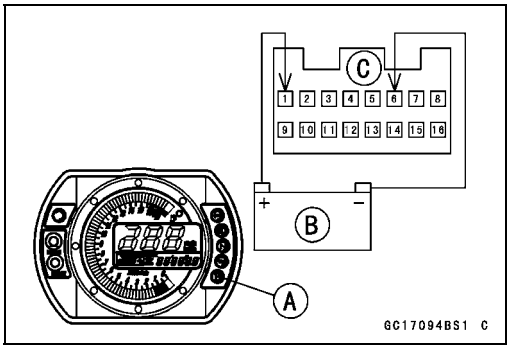

FI Indicator LED Light Check

Connector:	**Meter Connector [C] (disconnected)**
Connection:	**BR/W Lead Terminal [1] of the Meter → Battery (+) Terminal**
	BR/R Lead Terminal [6] of the Meter → Battery (–) Terminal
Criterion:	**The LED light should light.**

★If the LED light does not go on, replace the meter unit.

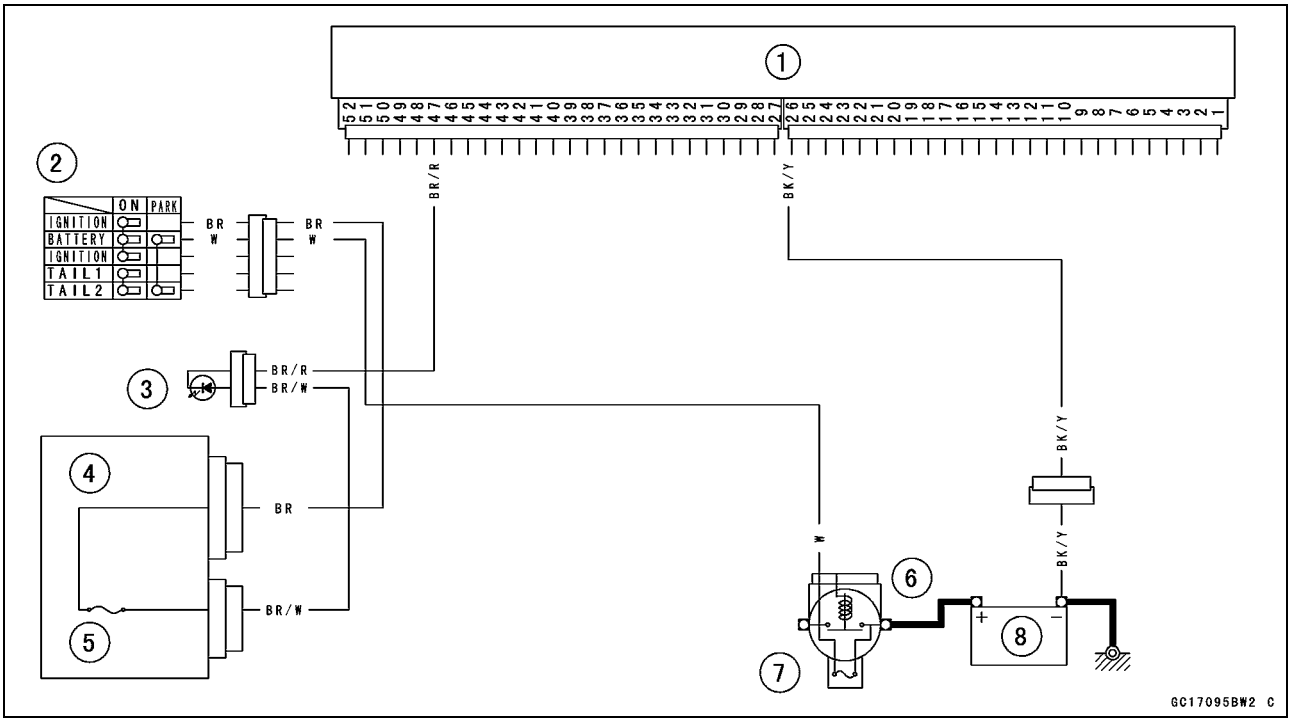

1. ECU
2. Ignition Switch
3. FI Indicator LED Light
4. Junction Box
5. Ignition Fuse 10 A
6. Starter Relay
7. Main Fuse 30 A
8. Battery

Fuel Line

Fuel Pressure Inspection

NOTE

○*Be sure the battery is fully charged.*

- Remove:
  Seats (see Frame chapter)
  Fuel Tank Bolts (see Fuel Tank Removal)
- Be sure to place a piece of cloth around the fuel supply pipe of the throttle body assembly and fuel pump.
- Remove the fuel hose.

⚠ WARNING

Be prepared for fuel spillage; any spilled fuel must be completely wiped up immediately.
When the fuel hose is disconnected, fuel spills out from the hose and the pipe because of residual pressure. Cover the hose connection with a piece of clean cloth to prevent fuel spillage.

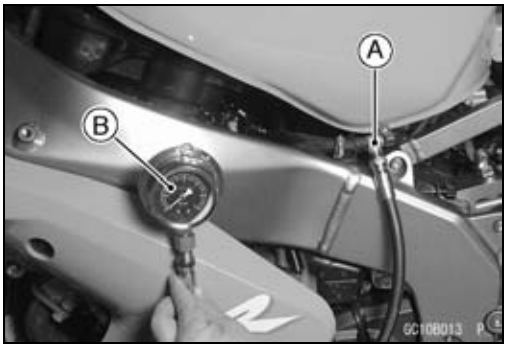

- Install the fuel pressure gauge adapter [A] between the fuel supply pipes of the fuel pump and throttle body assy.
- Connect the pressure gauge [B] to the fuel pressure gauge adapter.

Special Tools - Fuel Pressure Gauge Adapter: 57001–1417
Oil Pressure Gauge: 57001–125

⚠ WARNING

Do not try to start the engine with the fuel hoses disconnected.

- Turn the ignition switch ON. The fuel pump will turn for 3 seconds, and then stop.

CAUTION

Do not drive the fuel pump 3 seconds or more without the fuel in the fuel tank. If the fuel pump is driven without the fuel, it may be damaged.

- Measure the fuel pressure with the engine stopped.

Fuel Pressure
right after Ignition SW ON, with pump running:
Standard: 304 kPa (3.1 kgf/cm², 44 psi)
after 3 seconds from Ignition SW ON, with pump stopped:
Standard: 280 kPa (2.9 kgf/cm², 41 psi) , residual fuel pressure)
The system should hold the residual pressure about 30 seconds.

- Start the engine, and let it idle.
- Measure the fuel pressure with the engine idling.

Fuel Line

Fuel Pressure (idling)
Standard: 304 kPa (3.1 kgf/cm², 44 psi)

NOTE

○*The gauge hand will fluctuate. Read the pressure at the average of the maximum and minimum indications.*

★If the fuel pressure is much higher than the specified, replace the fuel pump.
★If the fuel pressure is much lower than specified, check the following:
Fuel Line Leakage
Amount of Fuel Flow (see Fuel Flow Rate Inspection)
★If the fuel pressure is much lower than specified, and if inspection above checks out good, replace the throttle body assy, or the fuel pump and measure the fuel pressure again.
- Remove the fuel pressure gauge and adapter.
- Install the fuel tank (see Fuel Tank Installation).

Fuel Flow Rate Inspection

NOTE

○*Be sure the battery is fully charged.*

⚠ WARNING

Gasoline is extremely flammable and can be explosive under certain conditions. Make sure the area is well-ventilated and free from any source of flame or sparks; this includes any appliance with a pilot light. Do not smoke. Turn the ignition switch OFF. Be prepared for fuel spillage; any spilled fuel must be completely wiped up immediately.

- Turn the ignition switch, and engine stop switch OFF.
- Wait until the engine cools down.
- Prepare a fuel hose of the inside diameter 7.5 mm (0.30 in.) and a measuring cylinder.
- Remove:
  Seats (see Frame chapter)
  Fuel Tank Bolts (see Fuel Tank Removal)

- Open the fuel tank cap [A] to lower the pressure in the tank.
- Be sure to place a piece of cloth around the fuel supply pipe of the fuel pump.
- Remove the fuel hose from the fuel pump (see Fuel Pump Removal).

⚠ WARNING

Be prepared for fuel spillage; any spilled fuel must be completely wiped up immediately.
When the fuel hose is disconnected, fuel spills out from the hose and the pipe because of residual pressure. Cover the hose connection with a piece of clean cloth to prevent fuel spillage.

Fuel Line

- Connect the prepared fuel hose [A] to the fuel supply pipe of the fuel pump.
- Secure the fuel hose with a clamp.
- Insert the fuel hose into the measuring cylinder [B].

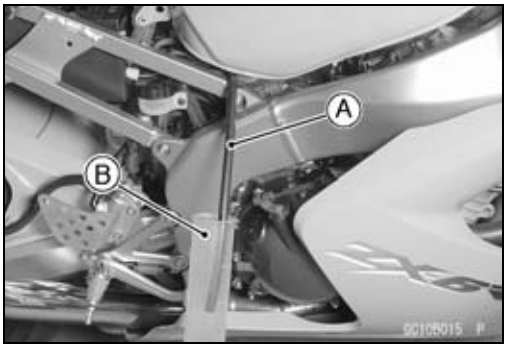

⚠ WARNING

Wipe off spilled out fuel immediately.
Be sure to hold the measuring cylinder vertical.

- Close the fuel tank cap.
- With the engine stopped, turn the ignition switch ON. The fuel pump should operate for 3 seconds, and then should stop.

CAUTION

Do not drive the fuel pump 3 seconds or more without the fuel in the fuel tank. If the fuel pump is driven without the fuel, it may be damaged.

- Measure the discharge for 3 seconds.

○Repeat this operation several times.

Amount of Fuel Flow
Standard: 67 mL (2.27 US oz) or more for 3 seconds

★If the fuel flow is much less than the specified, check the following:
Battery Condition (see Electrical System chapter)

- After inspection, connect the fuel hoses. (see Fuel Tank Installation).
- Start the engine and check for fuel leakage.

Fuel Pump

Fuel Pump Removal

CAUTION

Never drop the fuel pump, especially on a hard surface. Such a shock to the pump can damage it.

⚠ WARNING

Gasoline is extremely flammable and can be explosive under certain conditions. Make sure the area is well-ventilated and free from any source of flame or sparks; this includes any appliance with a pilot light. Do not smoke. Turn the ignition switch OFF. Disconnect the battery (–) terminal.
To make fuel spillage minimum, draw the fuel out from the fuel tank when the engine is cold. Be prepared for fuel spillage; any spilled fuel must be completely wiped up immediately.

- Draw the fuel out from the fuel tank with a commercially available electric pump.
- Remove the fuel tank (see Fuel Tank Removal).

○Be careful of fuel spillage from the fuel tank since fuel still remains in the fuel tank and fuel pump. Plug the fuel pipe of the fuel tank.

- Turn the fuel tank upside down.
- Unscrew the fuel pump bolts [A], and take out the fuel pump assembly [B] and gasket.
- Discard the fuel pump gasket.

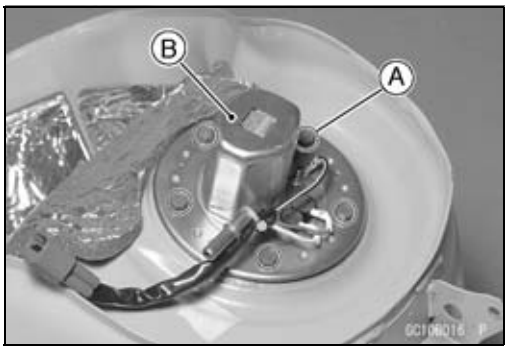

CAUTION

Do not pull the leads (C) of the fuel pump and fuel reserve switch. If they are pulled, the lead terminals may be damaged.

Fuel Pump Installation

- Remove dirt or dust from the fuel pump [A] by lightly applying compressed air.
- Replace the fuel pump gasket with a new one.

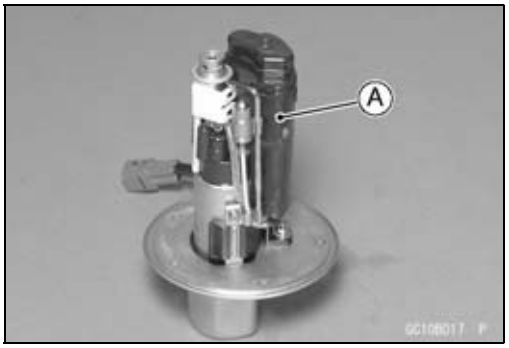

Fuel Pump

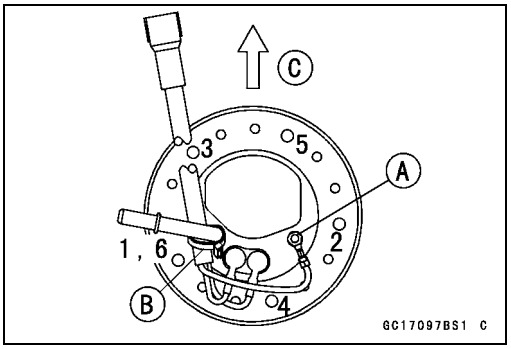

- Check that the fuel pump terminal [A] and band [B] are in place.
  [C] Front
- Apply a non-permanent locking agent to the threads of the fuel pump bolts.
- Tighten the fuel pump bolts to a snug fit following the tightening sequence shown.
- Following the tightening sequence, tighten the pump bolts to the specified torque.

  Torque - Fuel Pump Bolts: 9.8 N·m (1.0 kgf·m, 87 in·lb)
- Tighten the pump bolts again to check the tightness in the order shown.

Operation Inspection

NOTE

○*Be sure the battery is fully charged.*

- Turn the ignition switch ON and make sure that the fuel pump operates (make light sounds) for 3 seconds, and then stops.
- Turn the ignition switch OFF.

★If the pump does not work as described above, inspect the operating voltage.

Operating Voltage Inspection

NOTE

○*Be sure the battery is fully charged.*

- Turn the ignition switch OFF.
- Remove the fuel tank bolts and lift up the fuel tank.

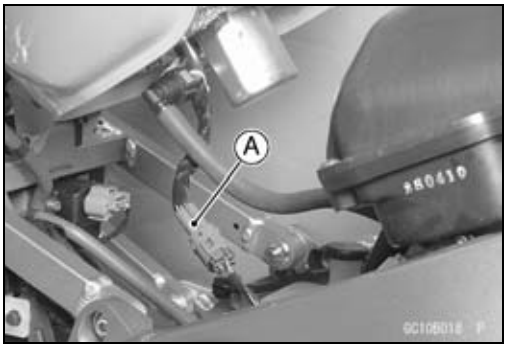

- Connect the hand tester (25 V DC) to the connector [A], with needle adapter set.

  Special Tools - Hand Tester: 57001-1394
  Needle Adapter Set: 57001–1457

○Measure the operating voltage with the engine stopped, and with the connector joined.

- Turn the ignition switch ON.

○The tester needle should indicate battery voltage for 3 seconds, and then 0 V.

Pump Operating Voltage at Pump Connections to Pump Connectors

Tester (+) → Y/R Lead

Tester (–) → BK/W Lead

Operating Voltage at Pump Connector

Standard:	**Battery Voltage (12.5 V or more) for 3 seconds, and then 0 V.**

★If the reading stays on battery voltage, and never shows 0 V. Check the ECU and fuel pump relay.

★If the voltage is in specification, but the pump doesn't work, replace the pump.

★If there is still no battery voltage, check the pump relay (see this chapter).

Fuel Pump

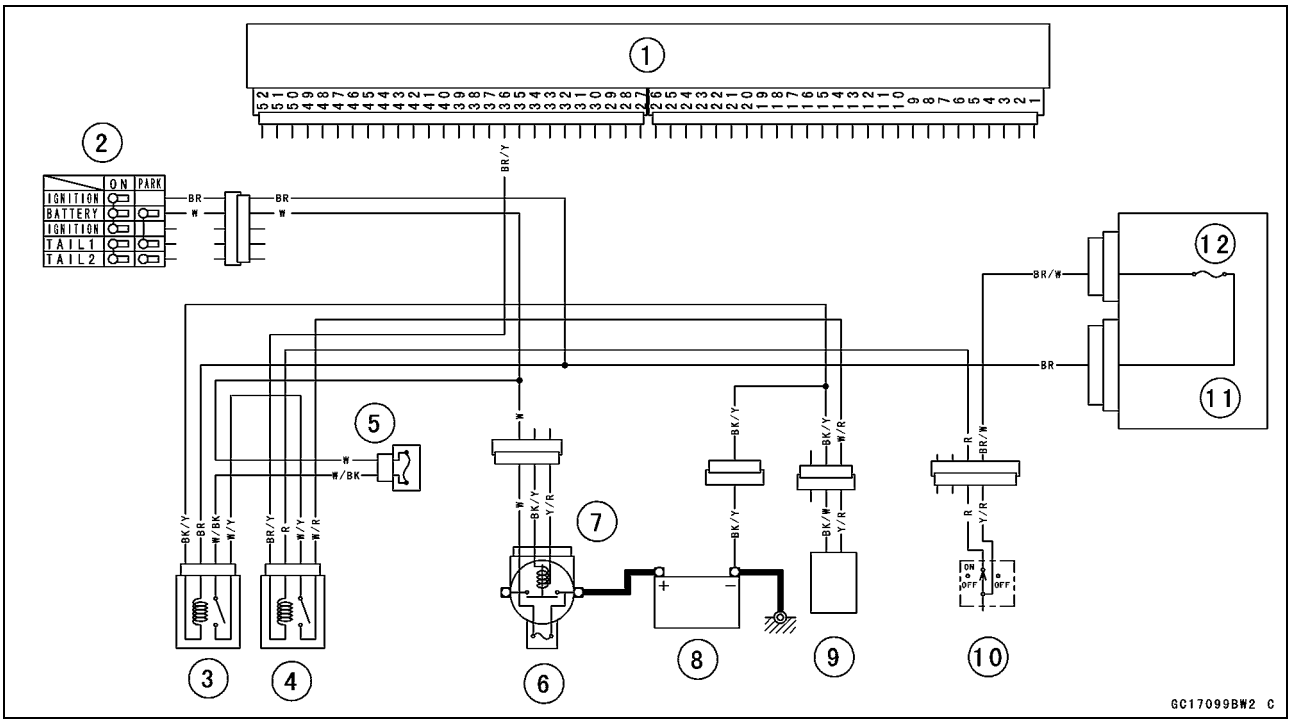

1. ECU
2. Ignition Switch
3. ECU Main Relay
4. Fuel Pump Relay
5. ECU Fuse 15 A
6. Main Fuse 30 A
7. Starter Relay
8. Battery
9. Fuel Pump
10. Engine Stop Switch
11. Junction Box
12. Ignition Fuse 10 A

Fuel Pump Relay

Fuel Pump Relay Removal

CAUTION
Never drop the relay, especially on a hard surface. Such a shock to the relay can damage it.

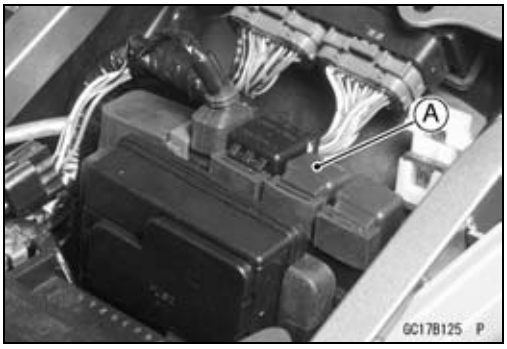

- Remove:
  Seats (see Frame chapter)
- Remove the fuel pump relay [A] from the bracket and disconnect the connector.

Fuel Pump Relay Inspection

- Remove the fuel pump relay (see above).
- Connect the hand tester [A] and one 12 V battery [B] to the relay connector [C] as shown.

  Special Tool - Hand Tester: 57001–1394

  Relay Coil Terminals [1] and [2]
  Relay Switch Terminals [3] and [4]

  Testing Relay

Tester range:	**1 Ω range**
Criteria:	**When battery is connected → 0 Ω**
	When battery is disconnected → ∞ Ω

★If the relay does not work as specified, replace the relay.

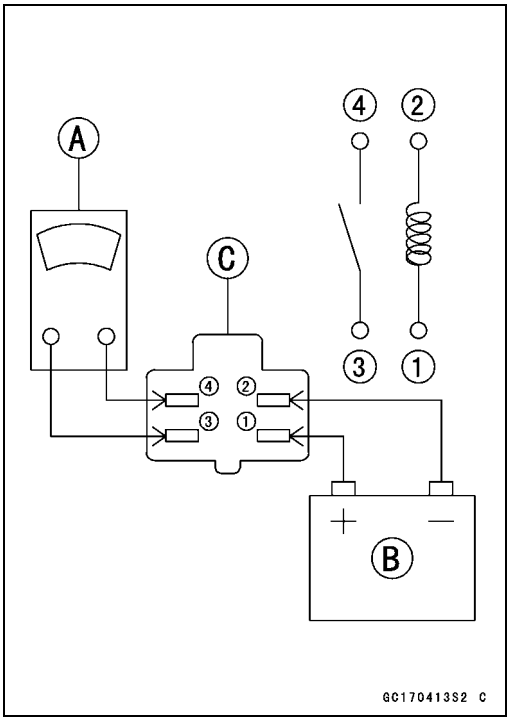

Fuel Pump Relay

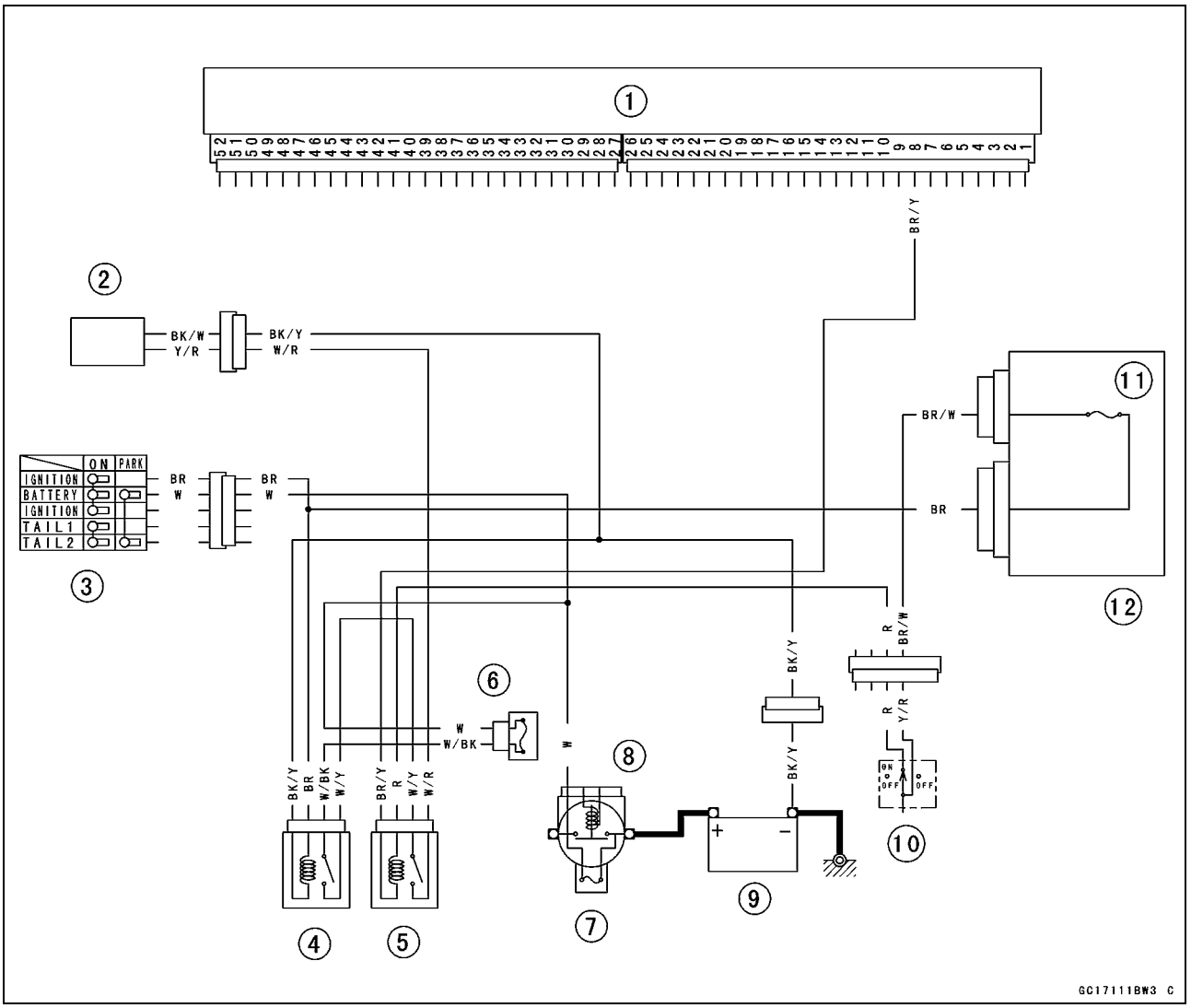

1. ECU
2. Fuel Pump
3. Ignition Switch
4. ECU Main Relay
5. Fuel Pump Relay
6. ECU Fuse 15 A
7. Main Fuse 30 A
8. Starter Relay
9. Battery
10. Engine Stop Switch
11. Ignition Fuse 10 A
12. Junction Box

Fuel Injectors

CAUTION

Never drop the injector, especially on a hard surface. Such a shock to the injector can damage it.

Audible Inspection

- Start the engine.
- Apply the tip of a screwdriver [A] to the injector [B]. Put the grip end onto your ear, and listen whether the injector is clicking or not.
- A sound scope can also be used.
- Do the same for the other injector.

★If all the injectors click at a regular intervals, the injectors are good.

○The click interval becomes shorter as the engine speed rises.

★If either injector doesn't click, perform the "Injector Signal Test" for injector operation.

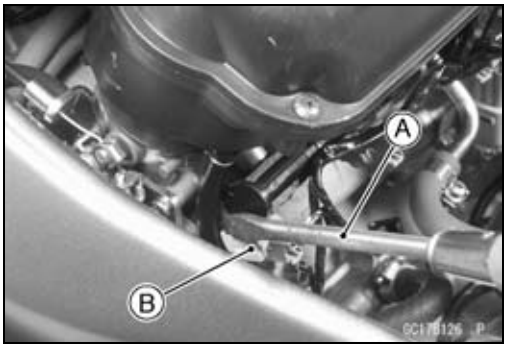

Injector Signal Test

- Prepare two test light sets with male terminals as shown.
  Rating of Bulb [A]: 12 V × 3 ~ 3.4 W
  Terminal Width [B]: 1.8 mm (0.07 in)
  Terminal Thickness [C]: 0.8 mm (0.03 in)

CAUTION

Do not use larger terminals than specified above. A larger terminal could damage the injector main harness connector (female), leading to harness repair or replacement.
Be sure to connect bulbs in series. The bulb works as a current limiter to protect the solenoid in the injector from excessive current.

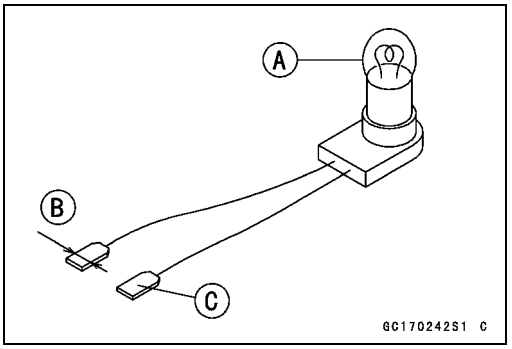

- Remove connectors for injector [A].
- Connect each test light set [B] to the injector sub harness connector [C].
- Turn the ignition switch ON.
- While cranking the engine with the starter motor, watch the test lights.

★If the test lights flicker at regular intervals, the injector circuit in the ECU, and the wiring are good. Perform the "Injector Resistance Inspection".

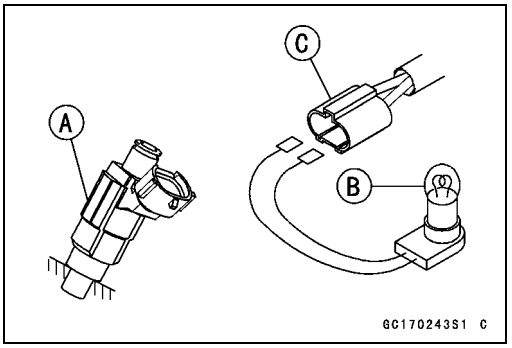

○Injector signals can be also confirmed by connecting the hand tester (× 10 V AC) instead of the test light set to the injector main harness (female) connector. Crank the engine with the starter motor, and check to see if the hand oscillates at regular intervals.

Special Tool - Hand Tester: 57001-1394

★If the test light doesn't flicker (or the test hand doesn't oscillates), check the wiring and connectors again. If the wiring is good, check the injector voltage.

Fuel Injectors

Injector Resistance Inspection

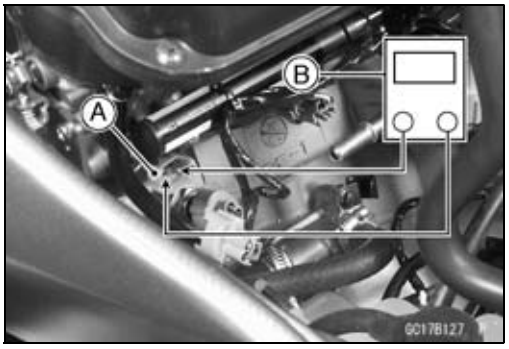

- Remove the throttle body assy (see Throttle Body Assy Removal).
- Disconnect the connector from the injector [A] (see Throttle Body Disassembly/Assembly).
- Measure the injector resistance with the hand tester [B].

Special Tool - Kawasaki Hand Tester: 57001–1394

Injector Resistance

Connections to Injector

	Meter (+)		Meter (–)
#1:	**W/R**	←→	**BL/R Terminal**
#2:	**W/R**	←→	**BL/G Terminal**
#3:	**W/R**	←→	**BL/BK Terminal**
#4:	**W/R**	←→	**BL/Y Terminal**

Standard: about 11.7 ~ 12.3 Ω @20°C (68°F)

★If the reading is out of the range, perform the “Injector Unit Test”.

★If the reading is normal, perform the “Injector Unit Test” for confirmation.

Injector Unit Test

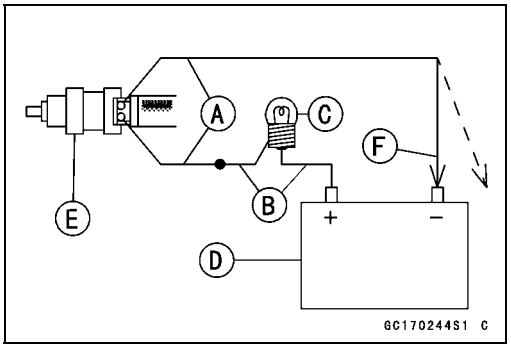

- Use two leads [A] and the same test light set [B] as in “Injector Signal Test”.
  Rating of Bulb [C]: 12 V × (3 ~ 3.4) W
  12 V Battery [D]

CAUTION
Be sure to connect the bulb in series. The bulb works as a current limiter to protect the solenoid in the injector from excessive current.

- Connect the test light set to the injector [E] as shown.
- Open and connect [F] the end of the lead to the battery (–) terminal repeatedly. The injector should click.

★If the injector does not click, replace the injector.

Fuel Injectors

Injector Voltage Inspection

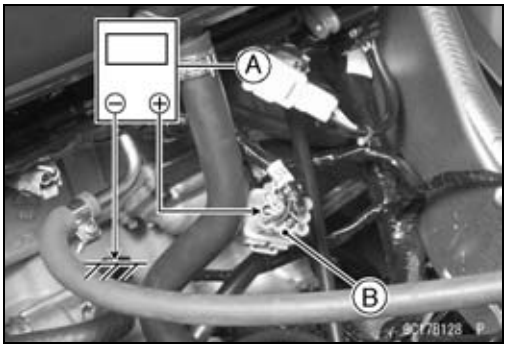

- Turn the ignition switch OFF.
- Remove:
  Fuel Tank (see Fuel Tank Removal)
- Connect a digital voltmeter [A] to the connector [B], with the needle adapter set.

Special Tool - Needle Adapter Set: 57001-1457

Injector Power Source Voltage
Connector to Injector #1, #2, #3, #4
Meter (+) → W/R lead
Meter (–) → Battery (–) Terminal

- Install the fuel tank.
- Turn the ignition switch ON.

Power Source Voltage at Injector Connector
Standard: Battery Voltage (12.5 V or more)

★If the power source voltage is less than standard, check the wiring (see wiring diagram in this section), fuel pump relay (Fuel Pump Relay Inspection) and ECU power source (see ECU Power Supply Inspection).

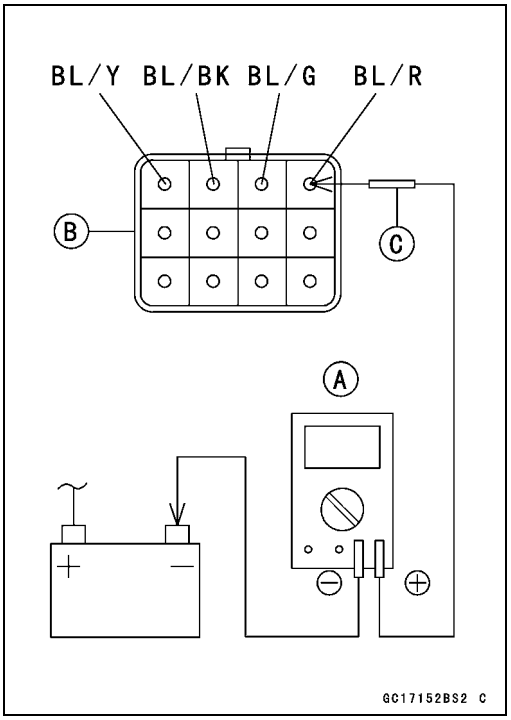

- Turn the ignition switch OFF.
- Remove:
  Fuel Tank (see Fuel Tank Removal)
- Connect a digital voltmeter [A] to the connector [B], with the needle adapter set [C].

Special Tool - Needle Adapter Set: 57001-1457

Injector Output Voltage
Connections to Injector #1
Meter (+) → BL/R lead
Meter (–) → Battery (-) Terminal
Connections to Injector #2
Meter (+) → BL/G lead
Meter (–) → Battery (-) Terminal
Connections to Injector #3
Meter (+) → BL/BK lead
Meter (–) → Battery (-) Terminal
Connections to Injector #4
Meter (+) → BL/Y lead
Meter (–) → Battery (-) Terminal

- Install the fuel tank.
- Turn the ignition switch ON.

Output Voltage at Injector Connector
Standard: Battery Voltage (12.5 V or more)

★If the output voltage is out of the standard, replace the ECU.

Fuel Injectors

Injector Fuel Line Inspection

- Remove the throttle body assy (see this chapter).
- Check the injector fuel line for leakage as follows:

○Connect a commercially available vacuum/pressure pump [A] to the nipple of the delivery pipe [B] with the fuel hose [C] (both ends connected with the clamps [D]) as shown.

Torque - Fuel Hose Clamp Screws: 1.5 N·m (0.15 kgf·m, 13 in·lb)

○Apply soap and water solution to the areas [E] as shown.

○Watching the pressure gauge, squeeze the pump lever [F], and build up the pressure until the pressure reaches the maximum pressure.

Fuel Line Maximum Pressure
Standard: 300 kPa (3.06 kgf/cm², 43 psi)

CAUTION
During pressure testing, do not exceed the maximum pressure for which the system is designed.

- Watch the gauge for at least 6 seconds.

★If the pressure holds steady, the system is good.

★If the pressure drops at once, or if bubbles are found in the area, the line is leaking. Replace the delivery pipe, injectors and related parts.

○Repeat the leak test, and check the fuel line for no leakage.

- Install the throttle body assy (see this chapter).
- Run the hoses correctly (see Cable, Wire, and Hose Routing section in Appendix chapter).

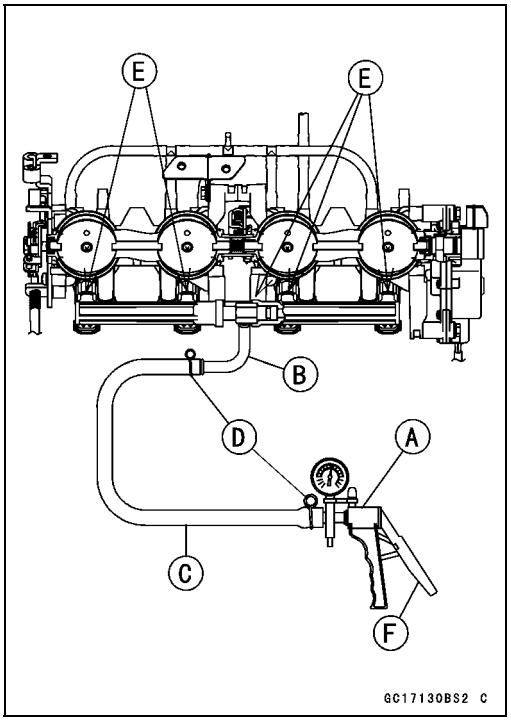

Fuel Injectors

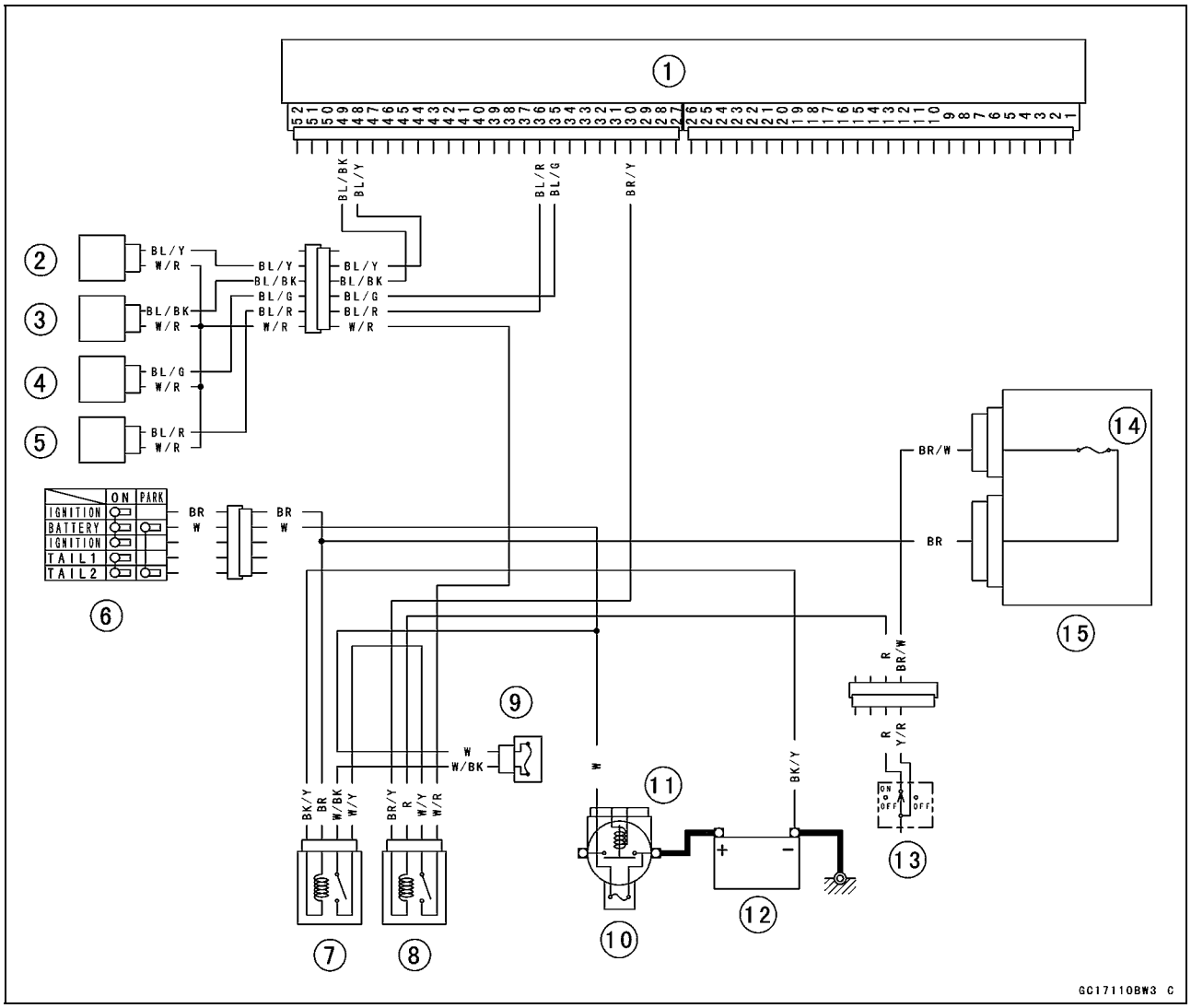

1. ECU
2. Fuel Injector #4
3. Fuel Injector #3
4. Fuel Injector #2
5. Fuel Injector #1
6. Ignition Switch
7. ECU Main Relay
8. Fuel Pump Relay
9. ECU Fuse 15 A
10. Main Fuse 30 A
11. Starter Relay
12. Battery
13. Engine Stop Switch
14. Ignition Fuse 10 A
15. Junction Box

Self-Diagnosis

Self-diagnosis Outline

The self-diagnosis system has three modes and can be switched to another mode by grounding the self-diagnosis terminal [A].

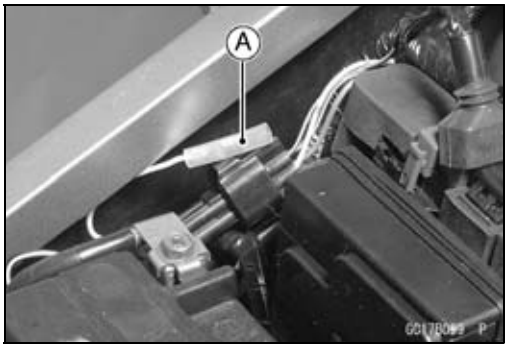

User Mode:

The ECU notifies the rider of troubles in DFI system and ignition system by lighting the FI indicator when DFI system and ignition system parts are faulty, and initiates fail-safe function. In case of serious troubles ECU stops the injection/ignition/starter motor operation.

Dealer Mode 1:

The FI indicator LED light emits service code(s) to show the problem(s) which the DFI system and ignition system has at the moment of diagnosis.

Dealer Mode 2:

The FI indicator light LED emits service code(s) to show the problem(s) which the DFI system and ignition system had in the past.

Self-diagnosis Procedures

○When a problem occurs with the DFI system and ignition system, the DFI indicator LED light [A] goes on.

NOTE

○*Use a fully charged battery when conducting self-diagnosis. Otherwise, the LED light blinks very slowly or doesn't blink.*

○*Keep the self-diagnosis terminal grounded during self -diagnosis, with a auxiliary lead.*

- Remove the seats (see Frame chapter) and pull the self -diagnosis terminal [G].
- Turn on the ignition switch.
- Connect an auxiliary a lead [E] for grounding to the self -diagnosis terminal.
- To enter the self-diagnosis dealer mode 1 ground [A] the self-diagnosis indicator terminal to the ground for more than 2 seconds [C], and then keep it grounded continuously [D].

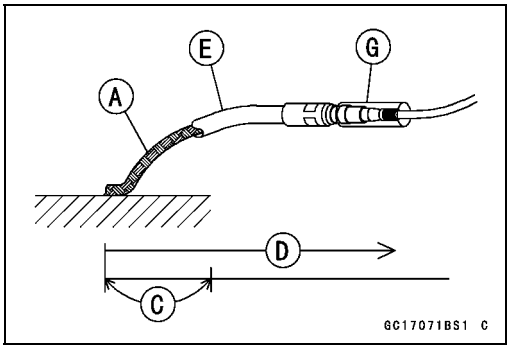

○Count the blinks of the LED light to read the service code. Keep the auxiliary lead ground until you finish reading the service code.

Self-Diagnosis

- To enter the self-diagnosis dealer mode 2 repeat opening [B] and grounding [A] the lead more than five times [F] within 2 seconds [C] after the lead is first grounded, and then keep it grounded continuously [D] for more than 2 seconds.

○Count the blinks of the LED light to read the service code. Keep the auxiliary lead ground until you finish reading the service code.

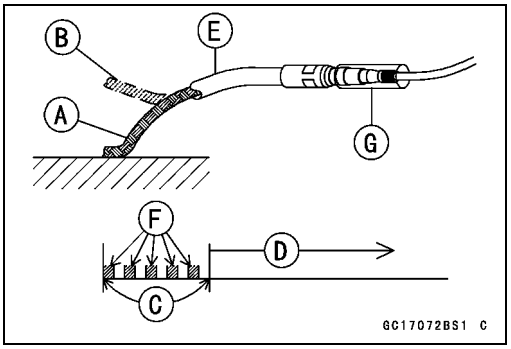

NOTE

○*If the self-diagnosis mode is in dealer mode 1 then you need to enter the dealer mode 2, turn off the ignition switch once.*

Service Code Clearing Procedures

- Enter the self-diagnosis dealer mode 2 (see Self- diagnosis Procedures).

NOTE

○*Make sure to keep the grounding until the following opening and grounding starts.*

- Pull the clutch lever in more than 5 seconds, and then release it.
- Repeat opening [B] and grounding [A] the lead (self-diagnosis terminal) more than five times [F] within 2 seconds [C] after the lead is grounded, and then keep it grounded continuously [D] for more than 2 seconds.

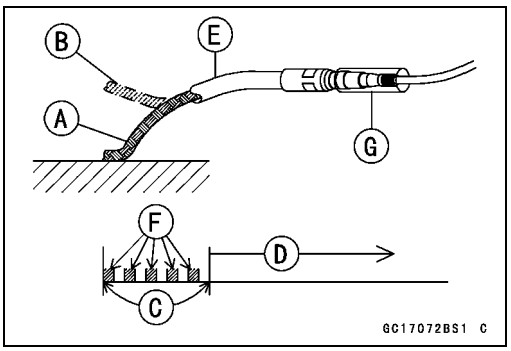

Self-Diagnosis

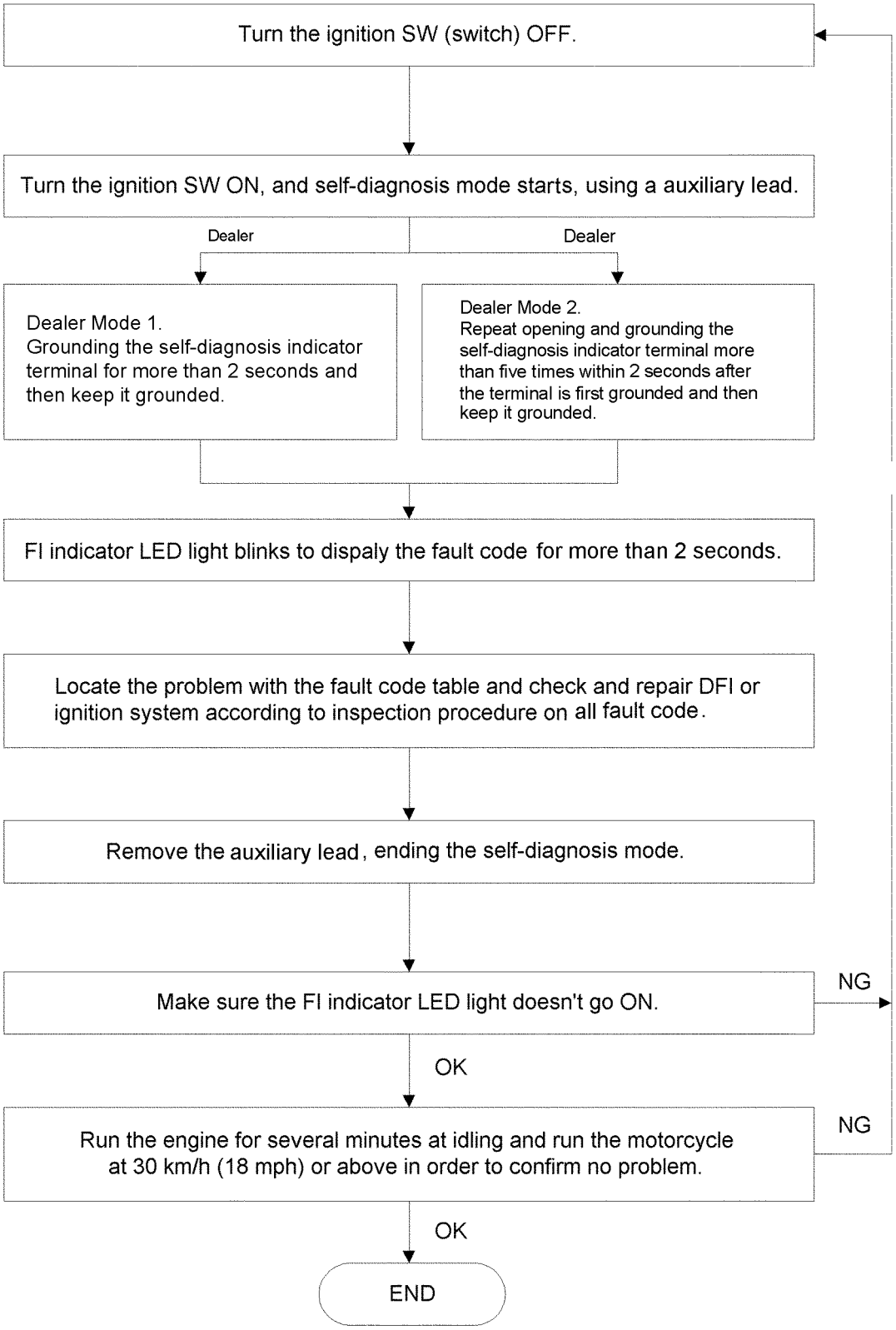

Self-Diagnosis

How to Read Service Codes

○Service codes are shown by a series of long or short blinks of the FI indicator LED light as shown below.
○Read 10th digit and unit digit as the FI indicator LED light blinks.
○When there are a number of problems, all the service codes can be stored and the display will begin starting from the lowest number service code in the numerical order. Then after completing all codes, the display is repeated until the self-diagnosis indicator terminal is open.
○If there is no problem, no code and unlight.
○For example, if two problems occurred in the order of 21, 12, the service codes are displayed from the lowest number in the order listed.
(12 → 21) → (12 → 21) → · · · (repeated)

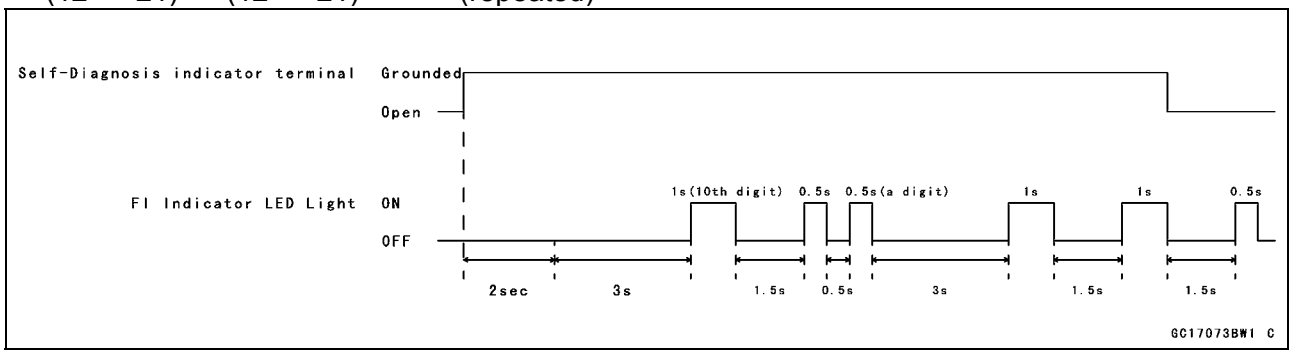

○If the problem is with the following parts, the ECU cannot memorize these problems, the FI indicator LED light doesn't go on, and no service codes can be displayed.
FI Indicator LED Light
Fuel Pump
Fuel Pump Relay
DFI Main Relay
ECU Power Source Wiring and Ground Wiring (see ECU Inspection in this chapter)
Fuel Injectors

How to Erase Service Codes

○Even if the ignition SW is turned OFF, the battery or the ECU are disconnected, or the problem is solved, all service codes remain in the ECU.
○Refer to Service Code Clearing Procedure for the service code erasure.

Self-Diagnosis

Service Code Table

Service Code	FI Indicator LED Light	Problems (1)
11	ON OFF	Main throttle sensor malfunction, wiring open or short
12		Inlet air pressure sensor malfunction, wiring open or short
13		Inlet air temperature sensor malfunction, wiring open or short
14		Water temperature sensor malfunction, wiring open or short
15		Atmospheric pressure sensor malfunction, wiring open or short
21		Crankshaft sensor malfunction, wiring open or short
23		Camshaft position sensor malfunction, wiring open or short
24		Speed sensor malfunction, wiring open or short
25		Speed sensor malfunction, wiring open or short
31		Vehicle-down sensor, malfunction, wiring open or short
32		Subthrottle sensor malfunction, wiring open or short
51		Stick (Ignition) coil #1 malfunction, wiring open or short
52		Stick (Ignition) coil #2 malfunction, wiring open or short
53		Stick (Ignition) coil #3 malfunction, wiring open or short
54		Stick (Ignition) coil #4 malfunction, wiring open or short
62		Subthrottle valve actuator malfunction, wiring open or short

Footnotes:

(1) The ECU may be involved in these problems. If all the parts and circuits checked out good, be sure to check the ECU for ground and power supply. If the ground and power supply are checked good, replace the ECU.

Self-Diagnosis

Backups

○The ECU takes the following measures to prevent engine damage when the DFI or the ignition system parts have troubles.

Service Codes	Parts	Output Signal Usable Range or Criteria	Backups by ECU
11	Main Throttle Sensor	Main Throttle Sensor Output Voltage 0.2 ~ 4.8 V	If the main throttle sensor system fails (the signal is out of the usable range, wiring short or open), the ECU locks ignition timing into the ignition timing at closed throttle position and sets the DFI in the D-J method. Also, the main throttle sensor system and inlet air pressure fails, the ECU locks ignition timing into the ignition timing at closed throttle position and sets the DFI in the α-N method.
12	Inlet Air Pressure Sensor	Inlet Air Pressure (absolute) Pv = 100 mmHg ~ 900 mmHg	If the inlet air pressure sensor system fails (the signal Pv is out of the usable range, wiring short or open), the ECU sets the DFI in the α - N method (1).
13	Inlet Air Tempera-ture Sensor	Inlet Air Temperature Ta = – 47°C ~ + 178°C	If the inlet air temperature sensor fails (the signal is out of the usable range, wiring short or open), the ECU sets Ta at 40°C.
14	Water Tem-perature Sensor	Water Temperature Tw = – 30C° ~ + 120°C	If the water temperature sensor system fails (the signal is out of the usable range, wiring short or op en), the ECU sets Tw at 80°C.
15	Atmo-spheric Pressure Sensor	Absolute Atmospheric Pressure Pa = 100 mmHg ~ 900 mmHg	If the atmospheric pressure sensor system fails (the signal is out of the usable range, wiring short or open), the ECU sets Pa at 760 mmHg (the standard atmospheric pressure).
21	Crankshaft Sensor	Crankshaft sensor must send 23 signals (output signal) to the ECU at the one cranking.	If crankshaft sensor generates less than 23 or more signals, the engine stops by itself.
23	Camshaft Position Sensor	Cam sensor must send one signal (output signal) to the ECU at the two cranking	If the camshaft position sensor system fails (the signal is missing, wiring short or open), the ECU continues to ignite cylinders in the same sequence following the last good signal.
24	Speed Sensor	Speed sensor must send 4 signals (output signal) to the ECU at the one rotation of the engine sprocket	If the speed sensor system fails (no signal, wiring short or open), the speedometer shows 0.
25	Speed Sensor	The gear position is decided by the signal of the speed sensor.	If the speed sensor system fails (no signal, wiring short or open), the ECU set the top (6) gear position.
31	Vehicle -down Sensor	Vehicle-down Sensor Output Voltage (signal) Vd = 0.4 V ~ 4.4 V	If the vehicle-down sensor system has failures (the output voltage Vd is more than usable range, wiring open), the ECU shuts off the fuel pump, the fuel injectors and the ignition system.

Self-Diagnosis

Service Codes	Parts	Output Signal Usable Range or Criteria	Backups by ECU
32	Subthrottle sensor	Subthrottle Sensor Output Voltage 0.15 ~ 4.85 V	If the subthrottle sensor system fails (the signal is out of the usable range, wiring short or open), the actuator locks sub throttle valve at full open position.
51	Stick Coil #1 (Ignition Coil)*	The ignition coil primary winding must send signals (output voltage) continuously to the ECU.	If the ignition primary winding #1 has failures (no signal, wiring short or open), the ECU shuts off the injector #1 to stop fuel to the cylinder #1, though the engine keeps running.
52	Stick Coil #2 (Ignition Coil)*	The ignition coil primary winding must send signals (output voltage) continuously to the ECU.	If the ignition primary winding #2 has failures (no signal, wiring short or open), the ECU shuts off the injector #2 to stop fuel to the cylinder #2, though the engine keeps running.
53	Stick Coil #3 (Ignition Coil)*	The ignition coil primary winding must send signals (output voltage) continuously to the ECU.	If the ignition primary winding #3 has failures (no signal, wiring short or open), the ECU shuts off the injector #3 to stop fuel to the cylinder #3, though the engine keeps running.
54	Stick Coil #4 (Ignition Coil) *	The ignition coil primary winding must send signals (output voltage) continuously to the ECU.	If the ignition primary winding #4 has failures (no signal, wiring short or open), the ECU shuts off the injector #4 to stop fuel to the cylinder #4, though the engine keeps running.
62	Subthrottle Valve Actuator	The actuator operates open and close of the subthrottle valve by the pulse signal from the ECU.	If the sub throttle actuator fails (the signal is out to the usable range, wiring short or open), the ECU stops the current to the actuator.

Note:

(1) α – N Method: the DFI control method from medium to heavy engine load. When the engine load is light like at idling or low speed, the ECU determines the injection quantity by calculating from the throttle vacuum (vacuum sensor output voltage) and engine speed (crankshaft sensor output voltage). This method is called D-J method. As the engine speed increases, and the engine load turns middle to heavy, the ECU determines the injection quantity by calculating from the throttle opening (throttle sensor output voltage) and the engine speed. This method is called α – N method.

* This depends on the number of stopped cylinders.

Main Throttle Sensor (Service Code 11)

The main throttle sensor is a rotating variable resistor that change output voltage according to throttle operating. The ECU senses this voltage change and determines fuel injection quantity, and ignition timing according to engine rpm, and throttle opening.

Input Terminal [A]
Output Terminal [B]
Ground Terminal [C]

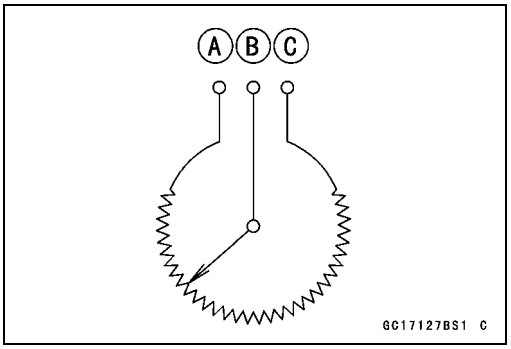

Main Throttle Sensor Removal/Adjustment

CAUTION

Do not remove or adjust the main throttle sensor [A] since it has been adjusted and set with precision at the factory.
Never drop the sensor, especially on a hard surface. Such a shock to the sensor can damage it.

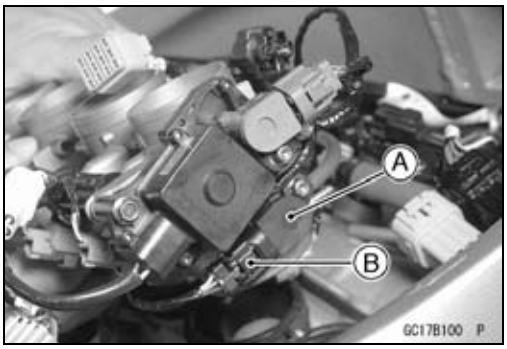

Main Throttle Sensor Connector [B]

Input Voltage Inspection

NOTE

○*Be sure the battery is fully charged.*

- Turn the ignition switch OFF.
- Remove the ECU (see this chapter). Do not disconnect the ECU connectors.
- Connect a digital voltmeter [A] to the connector [B], using the needle adapter set.

Special Tool - Needle Adapter Set: 57001–1457

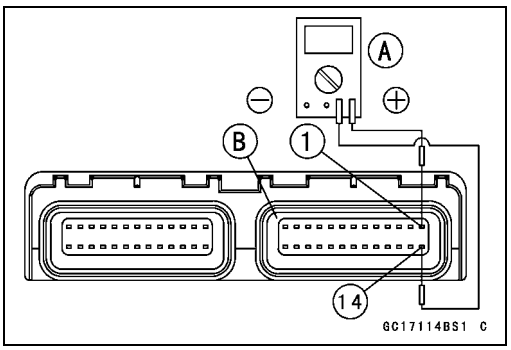

Main Throttle Sensor Input Voltage
Connections to ECU Connector
Meter (+)→ BL lead (terminal 1)
Meter (–)→ BR/BK lead (terminal 4)

- Measure the input voltage with the engine stopped, and with the connectors joined.
- Turn the ignition switch ON.

Input Voltage at ECU Connector
Standard: 4.75 ~ 5.25 V DC

- Turn the ignition switch OFF.

★If the reading of input voltage is less than the standard, check the ECU for its ground, power supply and wiring shorted.

★If the input voltage is within the standard range, check the input voltage at the main throttle sensor connector.

- Remove the throttle body assembly temporarily (see Throttle Body Assy Removal).

Main Throttle Sensor (Service Code 11)

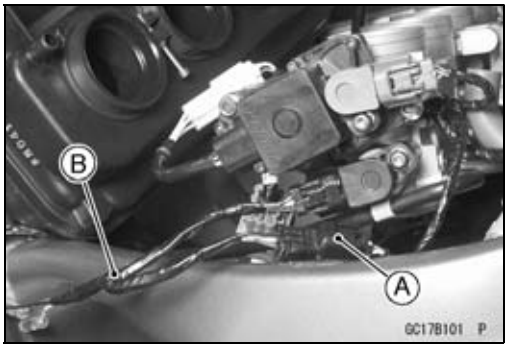

- Disconnect the main throttle sensor connector [A] and connect the harness adapter [B] between the harness connector and main throttle sensor connector.
- Connect a digital meter to the harness adapter leads.

Special Tool - Throttle Sensor Harness Adapter : 57001 -1538

Main Throttle Sensor Input Voltage
Connections to Sensor

Meter (+)→ BL lead

Meter (–)→ BR/BK lead

- Install the throttle body assembly.
- Measure the sensor input voltage with the engine stopped, and with the connector joined.
- Turn the ignition switch ON.

Input Voltage at Sensor
Standard: 4.75 ~ 5.25 V DC

- Turn the ignition switch OFF.

★If the reading is out of the range, check the wiring (see wiring diagram in this section).

★If the reading is good, check the output voltage of the sensor.

Main Throttle Sensor (Service Code 11)

Output Voltage Inspection

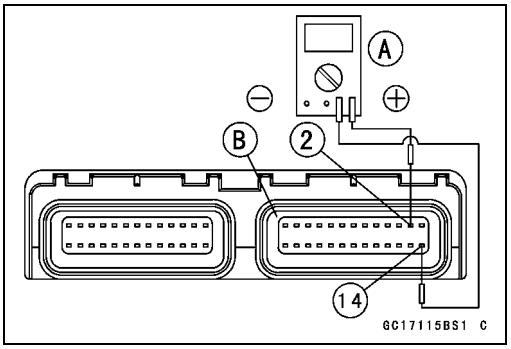

- Measure the output voltage at the ECU in the same way as input voltage inspection. Note the following.
  Digital Voltmeter [A]
  Connector [B]

  Special Tool - Needle Adapter Set: 57001–1457

  Main Throttle Sensor Output Voltage
  Connections to ECU

  Meter (+) → Y/W lead (terminal 2)
  Meter (–) → BR/BK lead (terminal 14)
- Start the engine and warm it up thoroughly.
- Check idle speed to ensure throttle opening is correct.

  Idle Speed
  Standard: 1 300 r/min (rpm)

★If the idle speed is out of the specified range, adjust the idle speed (see Idle Speed Inspection in Periodic Maintenance chapter).
- Turn the ignition switch OFF.
- Measure the output voltage with the engine stopped, and with the connector joined.
- Turn the ignition switch ON.
- Measure the output voltage when the throttle is fully opened or completely closed.

  Output Voltage at ECU
  Standard: 1.02 ~ 4.62 V DC (at idle throttle opening to full throttle opening)

NOTE

○*The throttle sensor is operating correctly if the following voltages are obtained:*
• 1.02 VDC (or slightly higher) with the throttle at the idle position.
• 4.62 VDC (or slightly lower) with the throttle at the fully open position.

CAUTION

Do not remove or adjust the main throttle sensor. It has been adjusted and set with precision at the factory.
Never drop the sensor can especially on a hard surface. A shock to the sensor can damage it.

★If the output voltage is within the standard range, check the ECU for a good ground, and power supply (see this chapter). If the ground and power supply are good, replace the ECU.
★If the output voltage is far out of the standard range (e.g. when the wiring is open, the reading is 0 V), check the output voltage again at the sensor connector.

Main Throttle Sensor (Service Code 11)

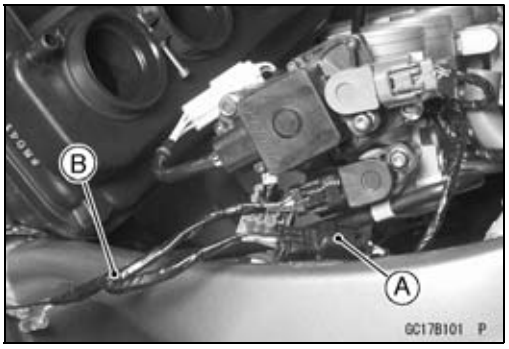

- Disconnect the main throttle sensor connector [A] and connect the harness adapter [B] between the harness connector and main throttle sensor connector.
- Connect a digital meter to the harness adapter leads.

Special Tool - Throttle Sensor Harness Adapter : 57001–1538

Throttle Sensor Output Voltage
Connections to Sensor
Meter (+) → Y/W lead
Meter (–) → BR/BK lead

- Measure the sensor output voltage with the engine stopped, and with the connector joined.
- Turn the ignition switch ON.
- Measure the output voltage when the throttle is fully opened or completely closed.

Output Voltage at Sensor
Standard: 1.02 ~ 4.62 V DC (at idle throttle opening to full throttle opening)

NOTE

○*The throttle sensor is operating correctly if the following voltages are obtained:*
• 1.02 VDC (or slightly higher) with the throttle at the idle position.
• 4.62 VDC (or slightly lower) with the throttle at the fully open position.

CAUTION

Do not remove or adjust the main throttle sensor. It has been adjusted and set with precision at the factory.
Never drop the sensor, especially on a hard surface. A shock to the sensor can damage it.

NOTE

○*The standard voltage marked with an asterisk refers to the value when the voltage reading at the Input Voltage Inspection shows 5V exactly.*
○*When the input voltage reading shows other than 5V, derive a voltage range as follows.*
Example:
In the case of a input voltage of 4.75 V.
1.02 × 4.75 ÷ 5.00 = 0.97 V
4.62 × 4.75 ÷ 5.00 = 4.39 V
Thus, the valid range is 0.97 ~ 4.39 V

- After throttle sensor voltage inspection, remove the harness adapter.

★If the reading is out of the standard range, inspect the throttle sensor resistance.
★If the output voltage is normal, check the wiring for continuity (see next diagram).

Main Throttle Sensor (Service Code 11)

Resistance Inspection

- Turn the ignition switch OFF.
- Disconnect the main throttle sensor connector.
- Connect a digital meter [A] to the main throttle sensor connector [B].
- Measure the main throttle sensor resistance.

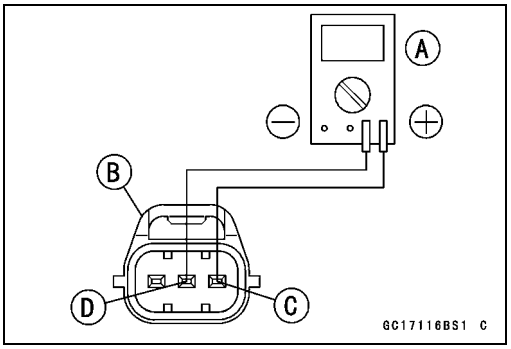

Main Throttle Sensor Resistance

Connections: **BL lead [C] ←→ BR/BK lead [D]**

Standard: **4 ~ 6 kΩ**

★If the reading is out of the range, replace the throttle body assy.

★If the reading is within the range, but the problem still exists, replace the ECU (see this chapter).

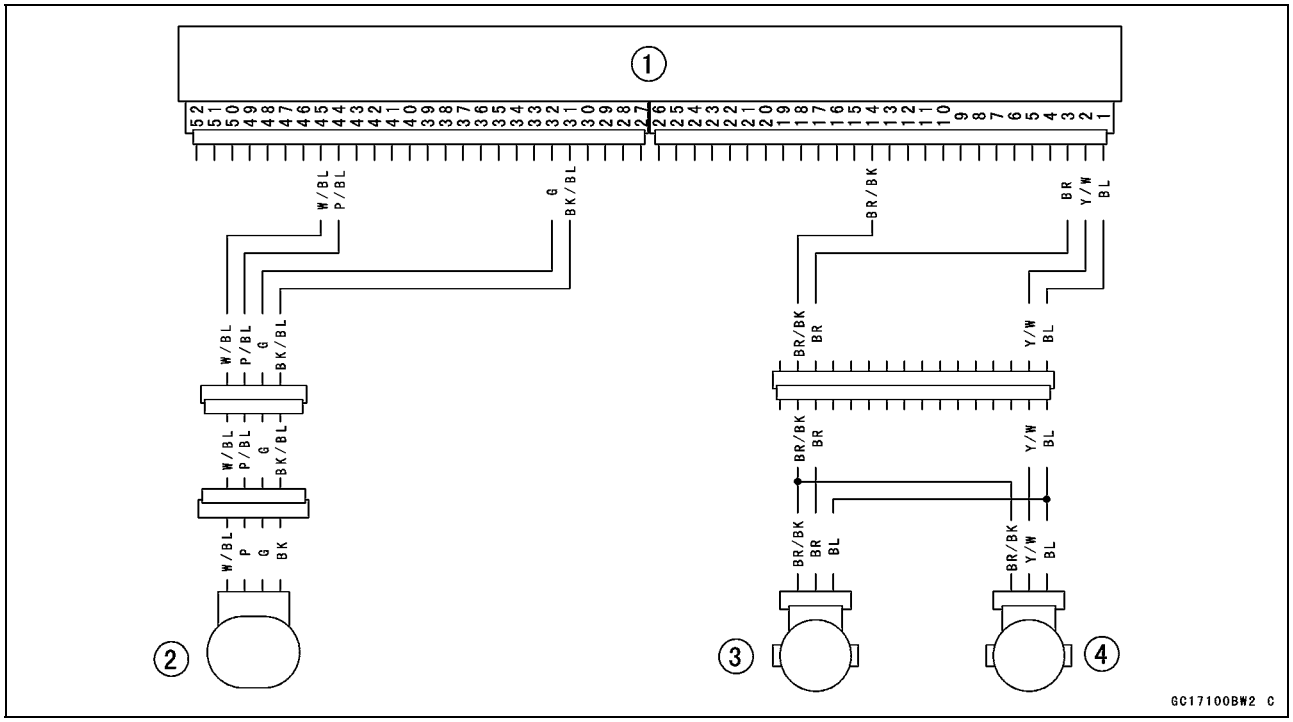

1. ECU
2. Subthrottle Valve Actuator
3. Subthrottle Sensor
4. Main Throttle Sensor

Inlet Air Pressure Sensor (Service Code 12)

CAUTION

Never drop the sensor, especially on a hard surface. Such a shock to the part can damage it.

Removal

- Turn the ignition switch off.
- Remove:
  Air Cleaner Housing (see Air Cleaner Housing Removal)
  Inlet Air Pressure Sensor Connector [A]
  Inlet Air Pressure Sensor Screw [B]
  Inlet Air Pressure Sensor [C]
  Vacuum Hose [D]

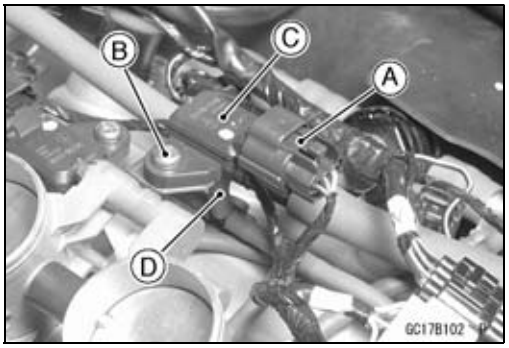

Installation

NOTE

○*The inlet air pressure sensor is the same part as the atmospheric sensor except that the sensor has a vacuum hose and different wiring.*

- Install:
  Vacuum Hose [A]
  Inlet Air Pressure Sensor [B]

  Torque - Inlet Air Pressure Sensor Screw: 4.9 N·m (0.50 kgf·m, 43 in·lb)

  [C] Vacuum Hoses

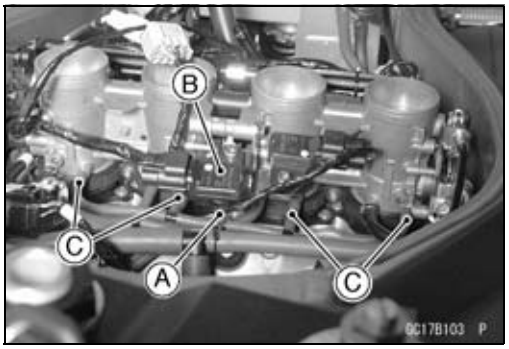

Input Voltage Inspection

NOTE

○*Be sure the battery is fully charged.*
○*The inspection is the same as "Input Voltage Inspection" of the throttle sensor and the atmospheric pressure sensor.*

- Turn the ignition switch OFF.
- Remove the ECU (see this chapter). Do not disconnect the ECU connectors.
- Connect a digital voltmeter [A] to the connector [B], with the needle adapter set.

  Special Tool - Needle Adapter Set: 57001–1457

  Inlet Air Pressure Sensor Input Voltage Connections to ECU

  Meter (+)→ BL lead (terminal 1)

  Meter (–) → BR/BK lead (terminal 14)

- Measure the input voltage with the engine stopped, and with the connectors joined.
- Turn the ignition switch ON.

  Input Voltage at ECU
  Standard: 4.75 ~ 5.25 V DC

★If the reading is less than the standard range, check the ECU for its ground, and power supply (see this chapter). If the ground and power supply are good, replace the ECU.

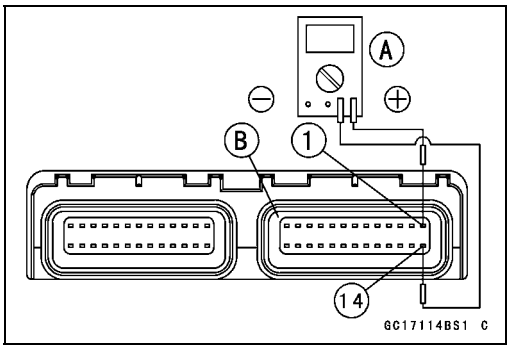

Inlet Air Pressure Sensor (Service Code 12)

★If the reading is within the standard range, and check the input voltage again at the sensor connector.
★Remove the air cleaner housing (see Air Cleaner Housing Removal).
- Disconnect the inlet air pressure sensor connector and connect the harness adapter [A] between the sub harness connector and inlet air pressure sensor connector.
- Connect a digital meter to the harness adapter leads.
  [B] Inlet Air Pressure Sensor

Special Tool - Sensor Harness Adapter: 57001–1561

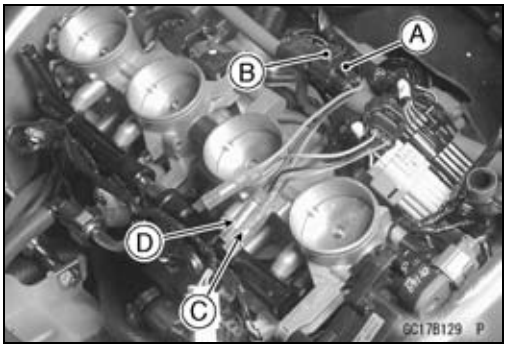

Inlet Air Pressure Sensor Input Voltage
Connections to Sensor
Meter (+) → BL lead [C]
Meter (–) → BR/BK lead [D]

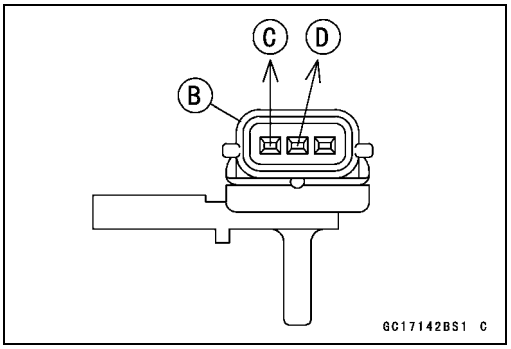

- Measure the input voltage with the engine stopped.
- Turn the ignition switch ON.

Input Voltage at Sensor Connector
Standard: 4.75 ~ 5.25 V DC

★If the reading is out of the standard range, check the wiring (see wiring diagram in this section).
★If the reading is good, the input voltage is normal. Check the output voltage.
- Turn the ignition switch OFF.

Output Voltage Inspection
- Measure the output voltage at the ECU in the same way as input voltage inspection. Note the following.

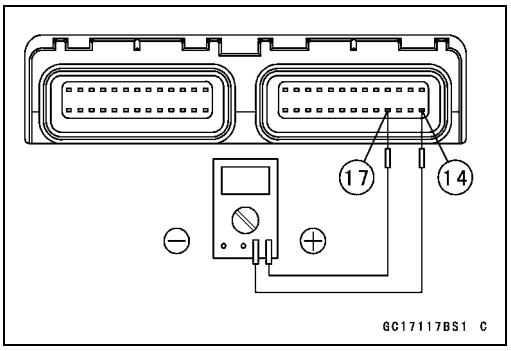

Inlet Air Pressure Sensor Output Voltage
Connections to ECU
Meter (+) → Y/BL lead (terminal 17)
Meter (–) → BR/BK lead (terminal 14)

Output Voltage at ECU
Usable Range: 3.80 ~ 4.20 V DC at the standard atmospheric pressure (101.32 kPa, 76 cmHg abs.)

NOTE

○*The output voltage changes according to the local atmospheric pressure.*
○*The vacuum sensor output voltage is based on a nearly perfect vacuum in the small chamber of the sensor. So, the sensor indicates absolute vacuum pressure.*

★If the output voltage is within the usable range, check the ECU for its ground, and power supply (see this chapter). If the ground and power supply are good, replace the ECU.

Inlet Air Pressure Sensor (Service Code 12)

★If the output voltage is far out of the usable range, check the output voltage again at the sensor connector [A] (when the lead is open, the output voltage is about 1.8 V).

● Connect a digital meter to the harness adapter leads.
[B] Inlet Air Pressure Sensor

Special Tool - Sensor Harness Adapter: 57001–1561

Inlet Air Pressure Sensor Output Voltage
Connections to Sensor

Meter (+) → Y/BL lead [C]

Meter (–) → BR/BK lead [D]

Output Voltage at Sensor Connector
Usable Range: 3.80 ~ 4.20 V DC at the standard atmospheric pressure (101.32 kPa or 76 cmHg absolute)

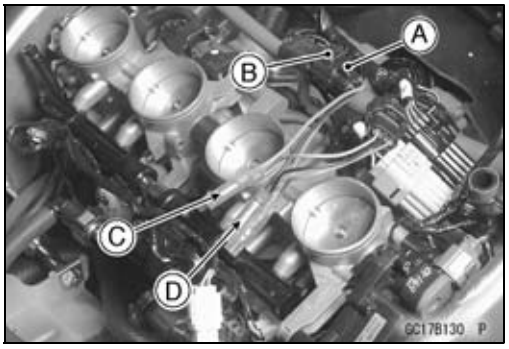

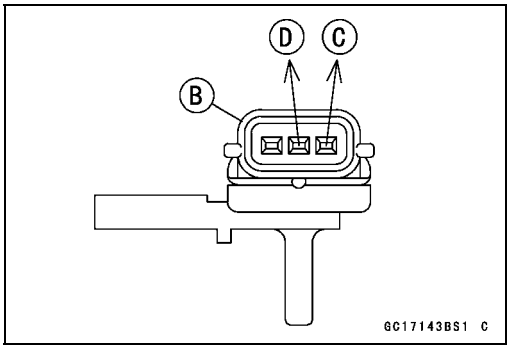

★If the output voltage is normal, check the wiring for continuity (see next diagram).

★If the output voltage is out of the usable range, replace the sensor.

● Turn the ignition switch OFF.

● Remove the throttle sensor harness adapter.

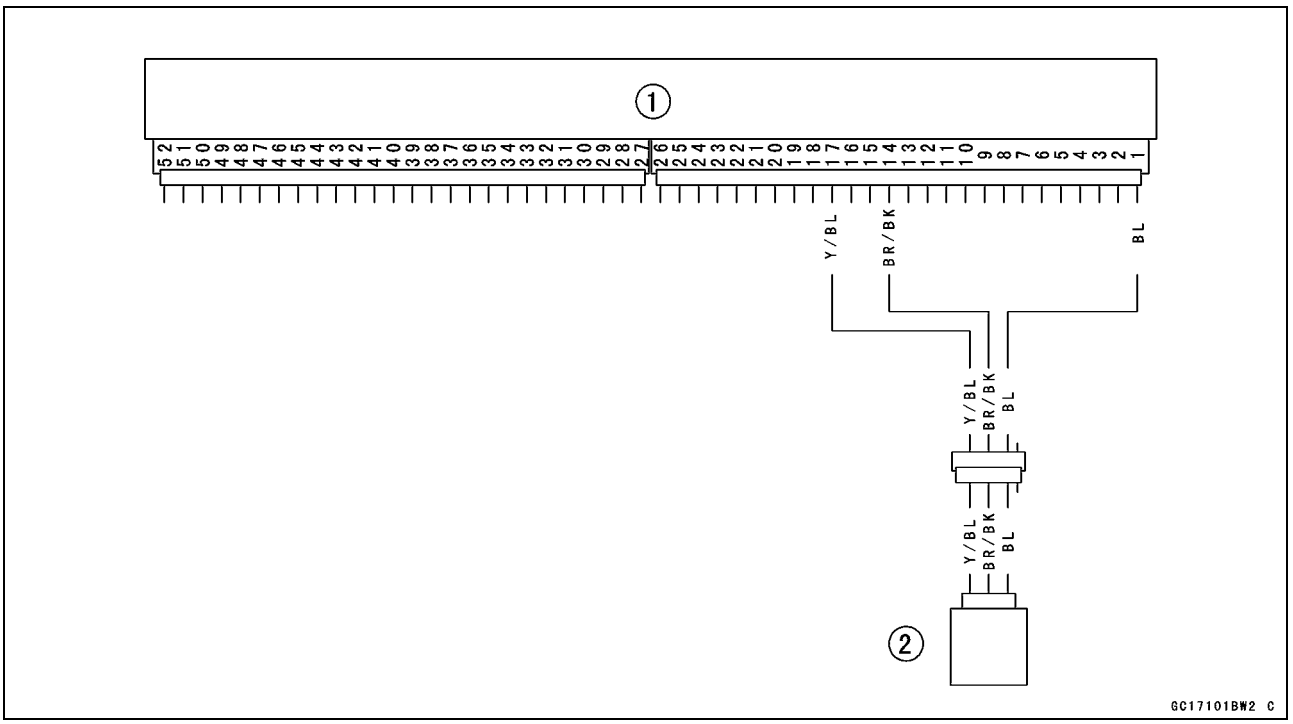

1. ECU
2. Inlet Air Pressure Sensor

★If you need to check the inlet air pressure sensor for vacuum other than 76 cmHg (abs), check the output voltage as follows:

Inlet Air Pressure Sensor (Service Code 12)

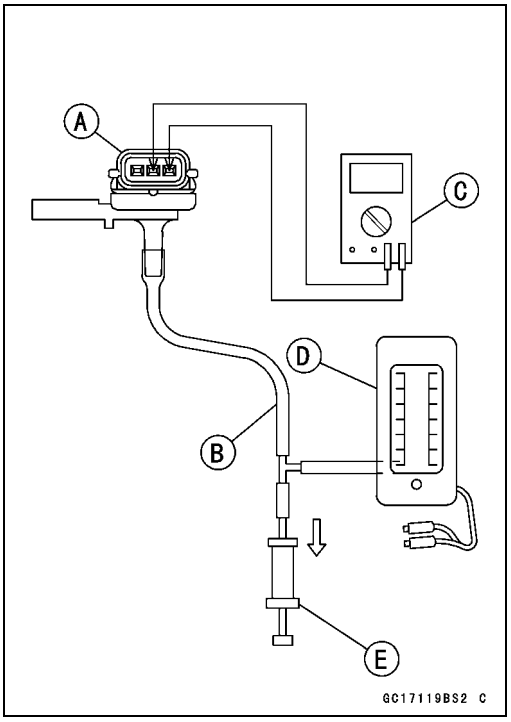

- Remove the inlet air pressure sensor [A] and disconnect the vacuum hose from the sensor.

○Do not disconnect the sensor connector.

- Connect an auxiliary hose [B] to the inlet air pressure sensor.
- Temporarily install the inlet air pressure sensor.

○Connect a commercially available digital meter [C], vacuum gauge [D], and the fork oil level gauge [E] to the inlet air pressure sensor.

Special Tools - Fork Oil Level Gauge: 57001-1290
Sensor Harness Adapter: 57001-1561

Inlet Air Pressure Sensor Output Voltage Connection to Sensor

Meter (+) → Y/BL lead

Meter (–) → BR/BK lead

○Turn the ignition switch ON.

○Measure the inlet air pressure sensor output voltage from various vacuum readings, while pulling the handle of the fork oil level gauge.

○Check the inlet air pressure sensor output voltage, using the following formula and chart.

Suppose:

Pg : Vacuum Pressure (gauge) of Throttle Assy
Pl : Local Atmospheric Pressure (absolute) measured by a barometer
Pv : Vacuum Pressure (absolute) of Throttle Assy
Vv : Sensor Output Voltage (v)

then

Pv = Pl – Pg

For example, suppose the following data is obtained:

Pg = 8 cmHg (vacuum gauge reading)
Pl = 70 cmHg (barometer reading)
Vv = 3.2 V (digital volt meter reading)

then

Pv = 70 – 8 = 62 cmHg (abs)

Plot this Pv (62 cmHg) at a point [1] on the chart and draw a vertical line through the point. Then, you can get the usable range [2] of the sensor output voltage.

Usable range = 3.08 ~ 3.48 V

Plot Vv (3.2 V) on the vertical line. → Point [3].

Results: In the chart, Vv is within the usable range and the sensor is normal.

Inlet Air Pressure Sensor (Service Code 12)

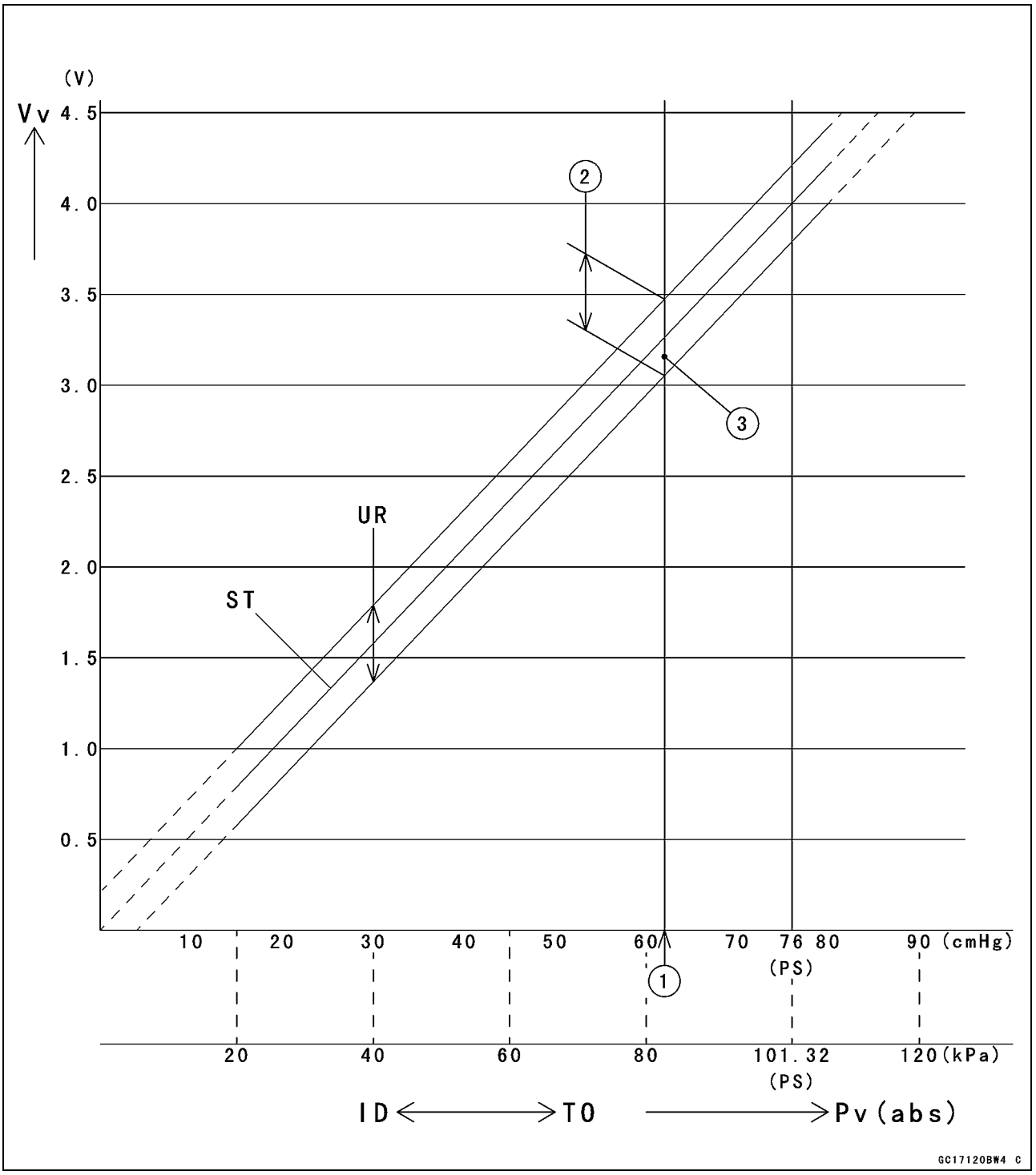

Vv: Inlet Air Pressure Sensor Output Voltage (V)
(Digital Meter Reading)

Pv: Throttle Vacuum Pressure (absolute)

Ps: Standard Atmospheric Pressure (absolute)

ID: Idling

TO: Throttle Full Open

ST: Standard of Sensor Output Voltage (v)

UR: Usable Range of Sensor Output Voltage (v)

Inlet Air Temperature Sensor (Service Code 13)

Removal/Installation

CAUTION
Never drop the sensor, especially on a hard surface. Such a shock to the sensor can damage it.

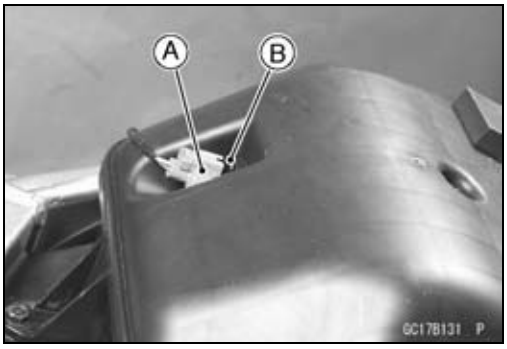

- Remove the fuel tank (see Fuel Tank Removal).
- Disconnect the connector [A] from the inlet air temperature sensor.
- Pull out the inlet air temperature sensor [B].

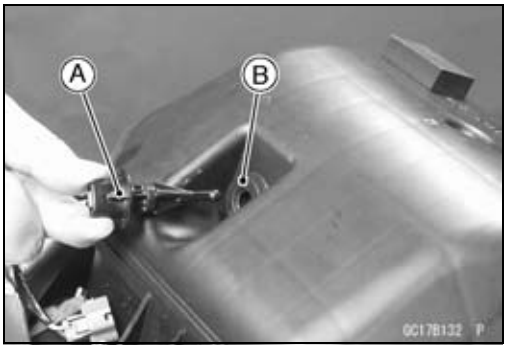

- Install the inlet air temperature sensor [A] in the grommet [B].

Output Voltage Inspection

NOTE

○*Be sure the battery is fully charged.*

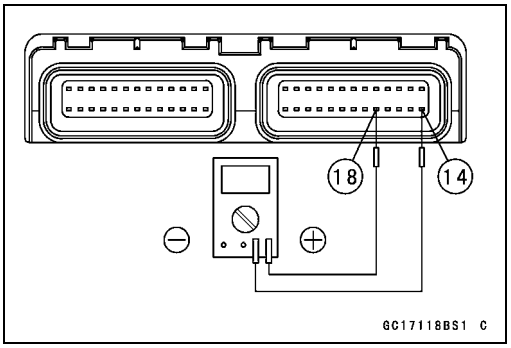

- Remove the ECU (see this chapter). Do not disconnect the ECU connectors.
- Connect a digital voltmeter to the ECU connector, using needle adapter set.

Special Tool - Needle Adapter Set: 57001–1457

Inlet Air Temperature Sensor Output Voltage
Connections to ECU Connector

Meter (+) → P lead (terminal 18)

Meter (–) → BR/BK lead (terminal 14)

- Measure the sensor output voltage with the engine stopped and the connector joined.
- Turn the ignition switch ON.

Output Voltage at ECU

Standard:	**about 2.25 ~ 2.50 V at inlet air temperature 20°C (68°F)**

NOTE

○*The output voltage changes according to the inlet air temperature.*

- Turn the ignition switch OFF.

Inlet Air Temperature Sensor (Service Code 13)

★If the output voltage is out of the specified, check the ECU for its ground, and power supply (see ECU section in this chapter). If the ground and power supply are good, replace the ECU.

★If the output voltage is far out of the specified (e.g. when the wiring is open, the voltage is about 4.6 V), remove the fuel tank cover, and check the wiring (see next diagram).

- Remove the needle adapter set, and apply silicone sealant to the seals of the connector for waterproofing.

Silicone Sealant (Kawasaki Bond: 56019-120)

- Seals of ECU Connectors

★If the wiring is good, check the sensor resistance.

Sensor Resistance Inspection

- Remove the inlet air temperature sensor (see this section).
- Suspend the sensor [A] in a container of machine oil so that the heat-sensitive portion is submerged.
- Suspend a thermometer [B] with the heat-sensitive portion [C] located in almost the same depth with the sensor.

NOTE

○*The sensor and thermometer must not touch the container side or bottom.*

- Place the container over a source of heat and gradually raise the temperature of the oil while stirring the oil gently for even temperature.
- Using a digital meter, measure the internal resistance of the sensor across the terminals at the temperatures shown in the table.

Inlet Air Temperature Sensor Resistance

Standard: 1.6 ~ 3.7 kΩ at 20°C (68°F)

0.24 ~ 0.43 kΩ at 80°C (176°F)

★If the measurement is out of the range, replace the sensor.

★If the measurement is within the specified, replace the ECU.

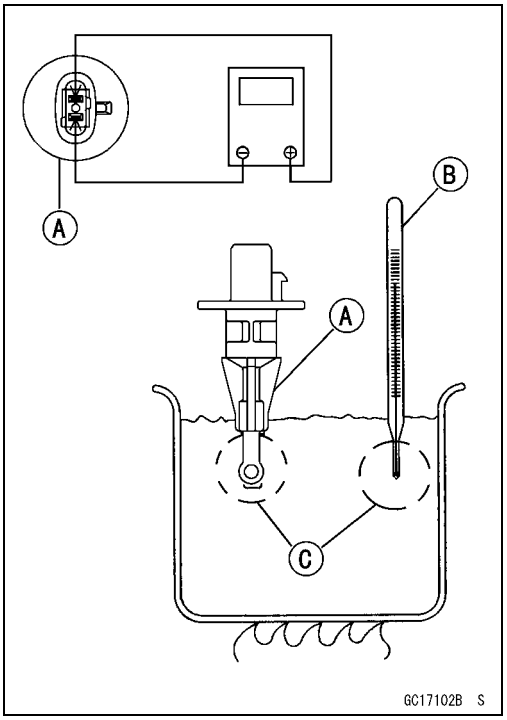

Inlet Air Temperature Sensor (Service Code 13)

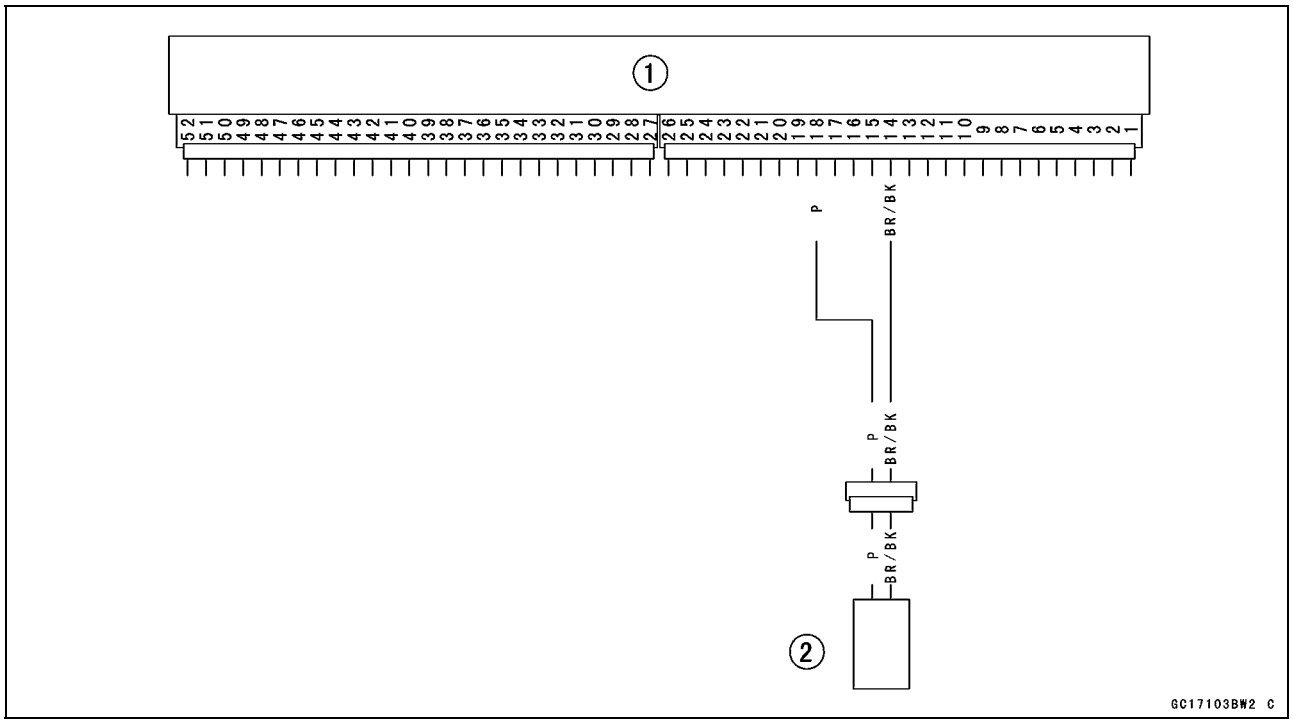

1. ECU
2. Inlet Air Temperature Sensor

Water Temperature Sensor (Service Code 14)

Removal/Installation

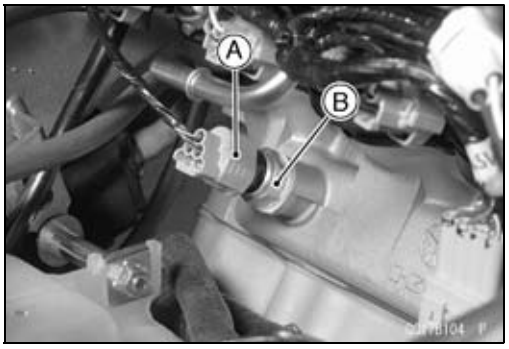

CAUTION

Never drop the sensor, especially on a hard surface. Such a shock to the sensor can damage it.

- Disconnect the sensor connector [A], and unscrew the water temperature sensor [B].

  Silicone Sealant (Kawasaki Bond: 56019-120)

  - Threads of Water Temperature Sensor

  Torque - Water Temperature Sensor: 25 N·m (2.5 kgf·m, 18 ft·lb)

- Fill the engine with coolant and bleed the air from the cooling system (see Coolant Filling in the Cooling System chapter).

Output Voltage Inspection

NOTE

○*Be sure the battery is fully charged.*

- Remove the ECU (see this chapter). Do not disconnect the connectors.

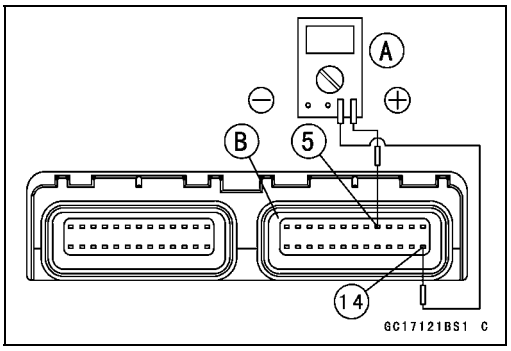

- Connect a digital voltmeter [A] to the ECU connector [B], with the needle adapter set.

  Special Tool - Needle Adapter Set: 57001–1457

  Water Temperature Sensor Output Voltage
  Connections to ECU
  Meter (+) → O lead (terminal 5)
  Meter (–) → BR/BK lead (terminal 14)

- Measure the sensor output voltage with the engine stopped and the connector joined.
- Turn the ignition switch ON.

  Output Voltage at ECU
  Standard: about 2.80 ~ 2.97 V at 20°C (68°F)

NOTE

○*The output voltage changes according to the coolant temperature in the engine.*

- Turn the ignition switch OFF.

★If the output voltage is out of the specified, check the ECU for its ground, and power supply (see this chapter). If the ground and power supply are good, replace the ECU.

★If the output voltage is far out of the specified (e.g. when the wiring is open, the voltage is about 5V), check the wiring (see next diagram).

★If the wiring is good, check the water temperature sensor resistance.

- Remove the needle adapter set, and apply silicone sealant to the seals of the connector for waterproofing.

  Silicone Sealant (Kawasaki Bond: 56019-120)

  - Seals of ECU Connectors

Water Temperature Sensor (Service Code 14)

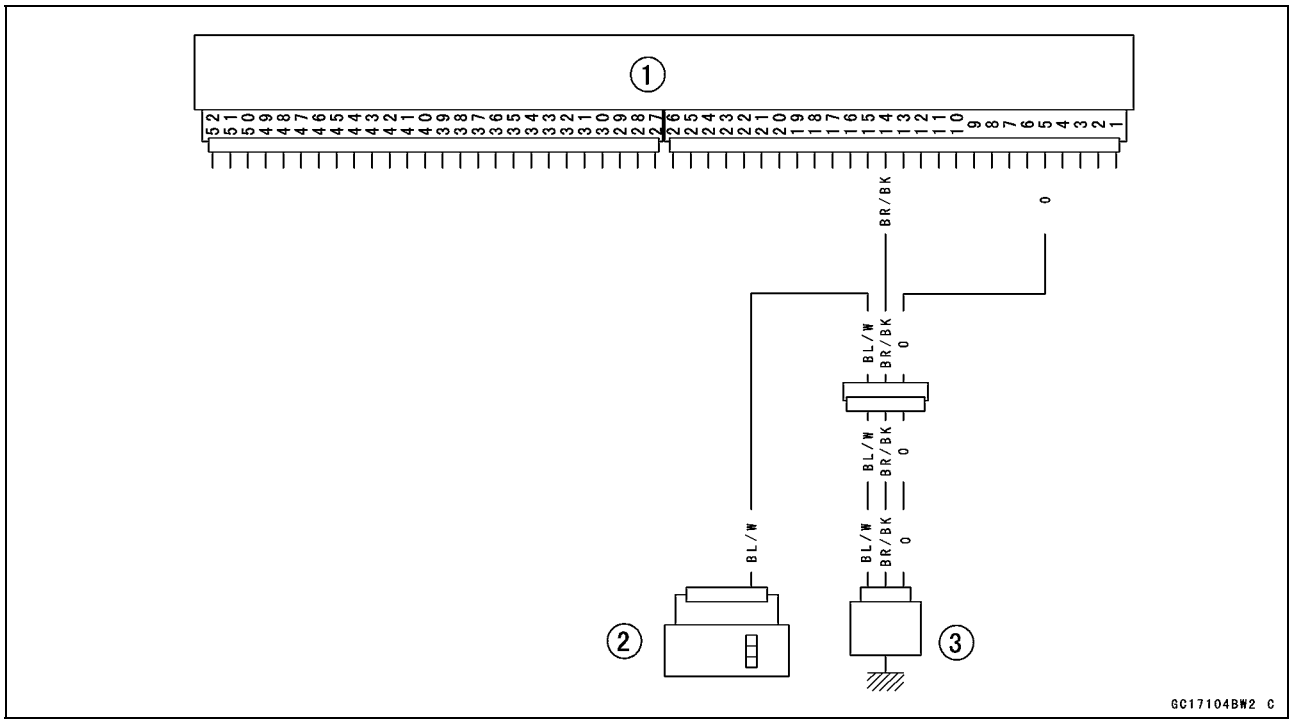

1. ECU 2. Meter 3. Water Temperature Sensor

Sensor Resistance Inspection

- Remove the water temperature sensor (see this section).
- Refer to Electrical System chapter for water temperature sensor inspection.

Atmospheric Pressure Sensor (Service Code 15)

CAUTION

Never drop the sensor, especially on a hard surface. Such a shock to the sensor can damage it.

Removal

- Turn the ignition switch off.
- Remove:
  Air Cleaner Housing (see Air Cleaner Housing Removal)
  Atmospheric Pressure Sensor Connector [A]
  Atmospheric Pressure Sensor Screw [B]
  Atmospheric Pressure Sensor [C]

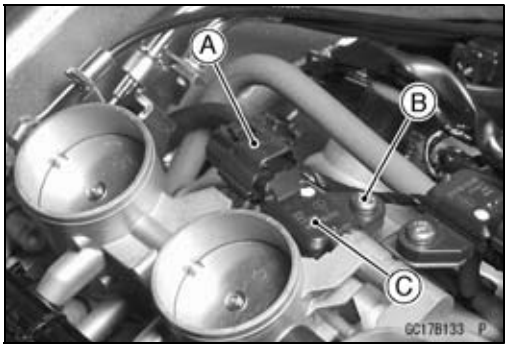

Installation

NOTE

○*The atmospheric pressure sensor is the same part as the inlet air pressure sensor except that the inlet air pressure sensor has a inlet air pressure hose and different wiring.*

- Installation is reverse of removal.
- Tighten the sensor bolts.

Torque - Atmospheric Pressure Sensor Screw: 4.9 N·m (0.50 kgf·m, 43 in·lb)

Input Voltage Inspection

NOTE

○*Be sure the battery is fully charged.*
○*The inspection is the same as "Input Voltage Inspection" of the throttle sensor and the inlet air pressure sensor.*

- Turn the ignition switch OFF.
- Remove the ECU (see this chapter). Do not disconnect the ECU connectors.
- Connect a digital voltmeter [A] to the connector [B], with the needle adapter set.

Special Tool - Needle Adapter Set: 57001–1457

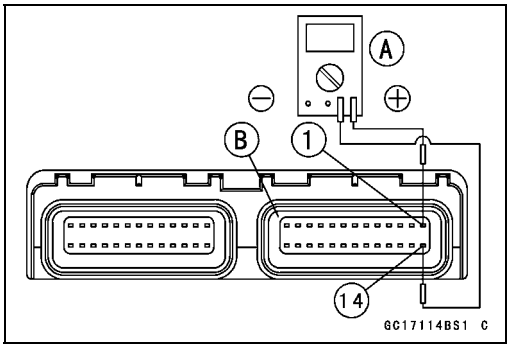

Atmospheric Pressure Sensor Input Voltage
Connections to ECU
Meter (+) → BL lead (terminal 1)
Meter (–) → BR/BK lead (terminal 14)

- Measure the input voltage with the engine stopped, and with the connectors joined.
- Turn the ignition switch ON.

Input Voltage at ECU
Standard: 4.75 ~ 5.25 V DC

★If the reading of input voltage is less than the standard range, check the ECU for its ground, and power supply (see this chapter). If the ground and power supply are good, replace the ECU.

Atmospheric Pressure Sensor (Service Code 15)

★If the reading is within the standard range, remove the seat cover, and check the input voltage again at the sensor connector.
★Remove the air cleaner housing (see Air Cleaner Housing Removal).
- Disconnect the atmospheric pressure sensor connector and connect the harness adapter [A] between the main harness connector and pressure sensor connector.
- Connect a digital meter to the harness adapter leads.
  [B] Atmospheric Pressure Sensor

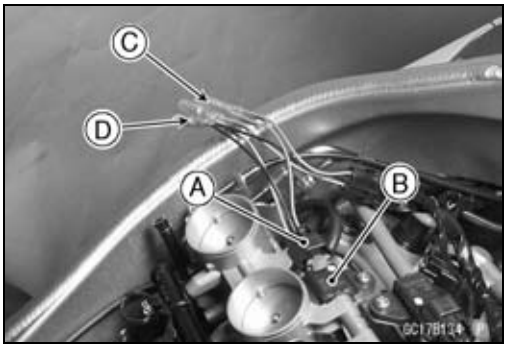

Special Tool - Sensor Harness Adapter: 57001–1561

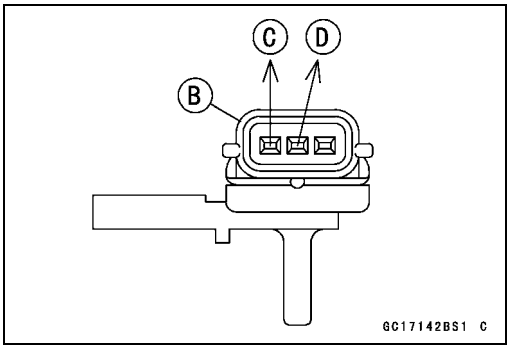

Atmospheric Pressure Sensor Input Voltage
Connections to Sensor
Meter (+) → BL lead [C]
Meter (–) → BR/BK lead [D]

- Measure the input voltage with the engine stopped, and with the connector joined.
- Turn the ignition switch ON.

Input Voltage at Sensor Connector
Standard: 4.75 ~ 5.25 V DC

★If the reading is out of the standard range, check the wiring (see wiring diagram in this section).
★If the reading is good, the input voltage is normal. Check the output voltage.
- Turn the ignition switch OFF.

Output Voltage Inspection

- Measure the output voltage at the ECU in the same way as input voltage inspection. Note the following.
  Digital Meter [A]
  ECU Connector [B]

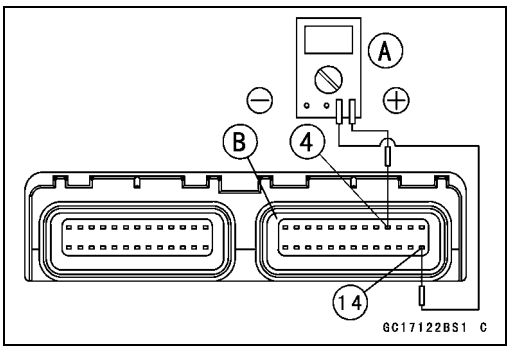

Atmospheric Pressure Sensor Output Voltage
Connections to ECU
Meter (+) → G/W lead (terminal 4)
Meter (–) → BR/BK lead (terminal 14)

Output Voltage
Usable Range: 3.80 ~ 4.20 V DC at the standard atmospheric pressure (101.32 kPa, 76 cmHg abs.)

NOTE

○*The output voltage changes according to the local atmospheric pressure.*
○*The atmospheric sensor output voltage is based on a nearly perfect vacuum in the small chamber of the sensor. So, the sensor indicates absolute atmospheric pressure.*

★If the output voltage is within the usable range, check the ECU for its ground, and power supply (see this chapter). If the ground and power supply are good, replace the ECU.

Atmospheric Pressure Sensor (Service Code 15)

★If the output voltage is far out of the usable range, remove the fuel tank, and check the output voltage at the sensor connector [A] (when the wiring is open, the output voltage is about 1.8 V).

● Connect a digital meter [A] to the harness adapter leads.
[B] Atmospheric Pressure Sensor

Special Tool - Sensor Harness Adapter: 57001–1561

Atmospheric Pressure Sensor Output Voltage
Connections to Sensor

Meter (+) → G/W lead [C]

Meter (–) → BR/BK lead [D]

Output Voltage at Sensor
Usable Range: 3.80 ~ 4.20 V DC at the standard atmospheric pressure (101.32 kPa, 76 cmHg abs)

★If the output voltage is normal, check the wiring for continuity (see next diagram).

★If the output voltage is out of the usable range, replace the sensor.

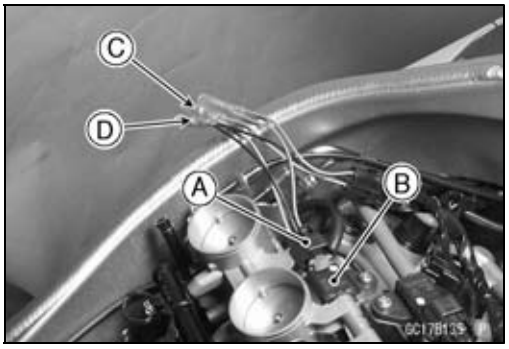

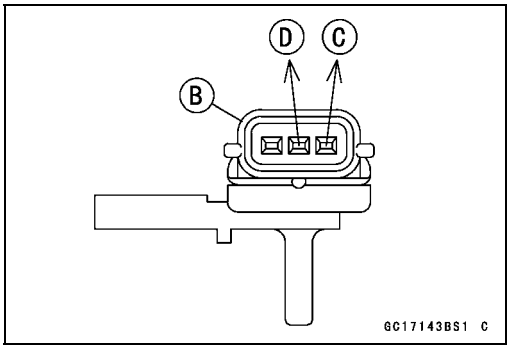

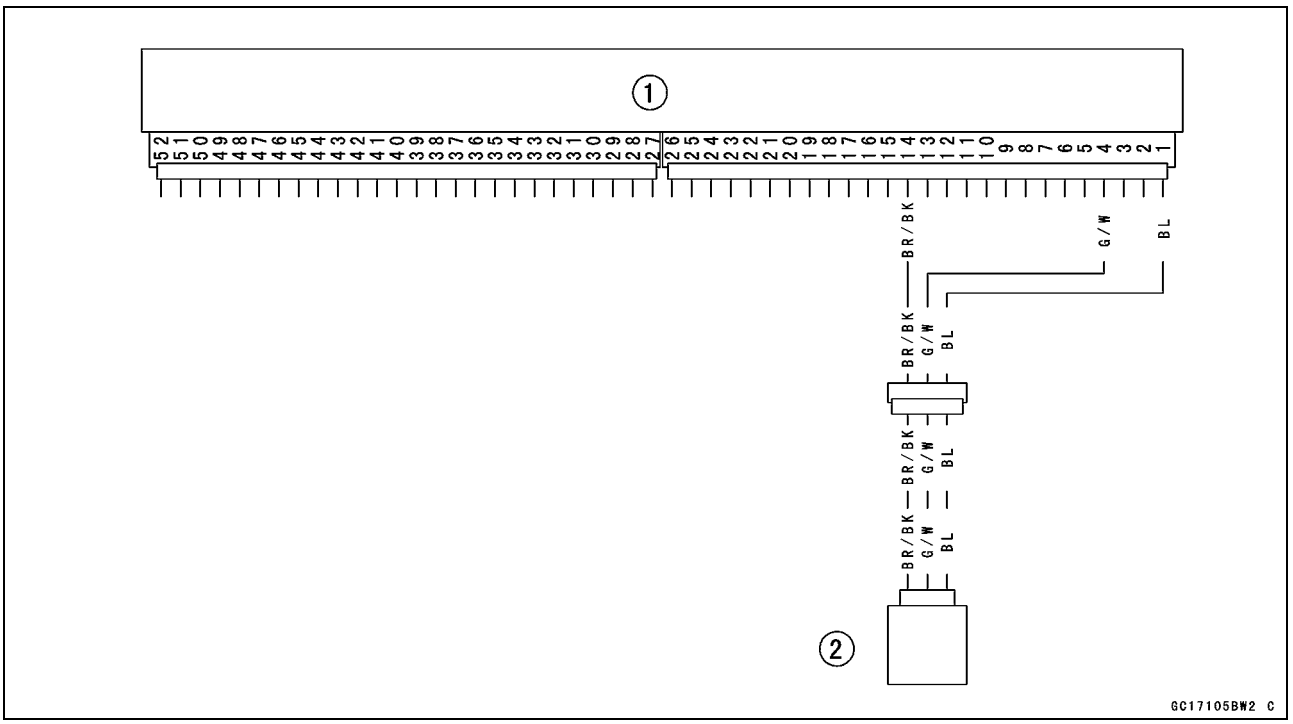

1. ECU
2. Atmospheric Pressure Sensor

★If you need to check the atmospheric pressure sensor for various altitudes other than sea level, check the output voltage as follows:

○Determine the local altitude (elevation).

Atmospheric Pressure Sensor (Service Code 15)

★If you know the local atmospheric pressure using a barometer, substitute the atmospheric pressure for throttle vacuum pressure in the inlet air pressure sensor chart (see intake Air Pressure Sensor section in this chapter). And get the usable range of the atmospheric pressure sensor output voltage and check if output voltage is within the standard or not in the same way as Output Voltage Inspection of the inlet air pressure sensor.

★If you know the local altitude, use the following chart.

Atmospheric Pressure/Altitude Relationship

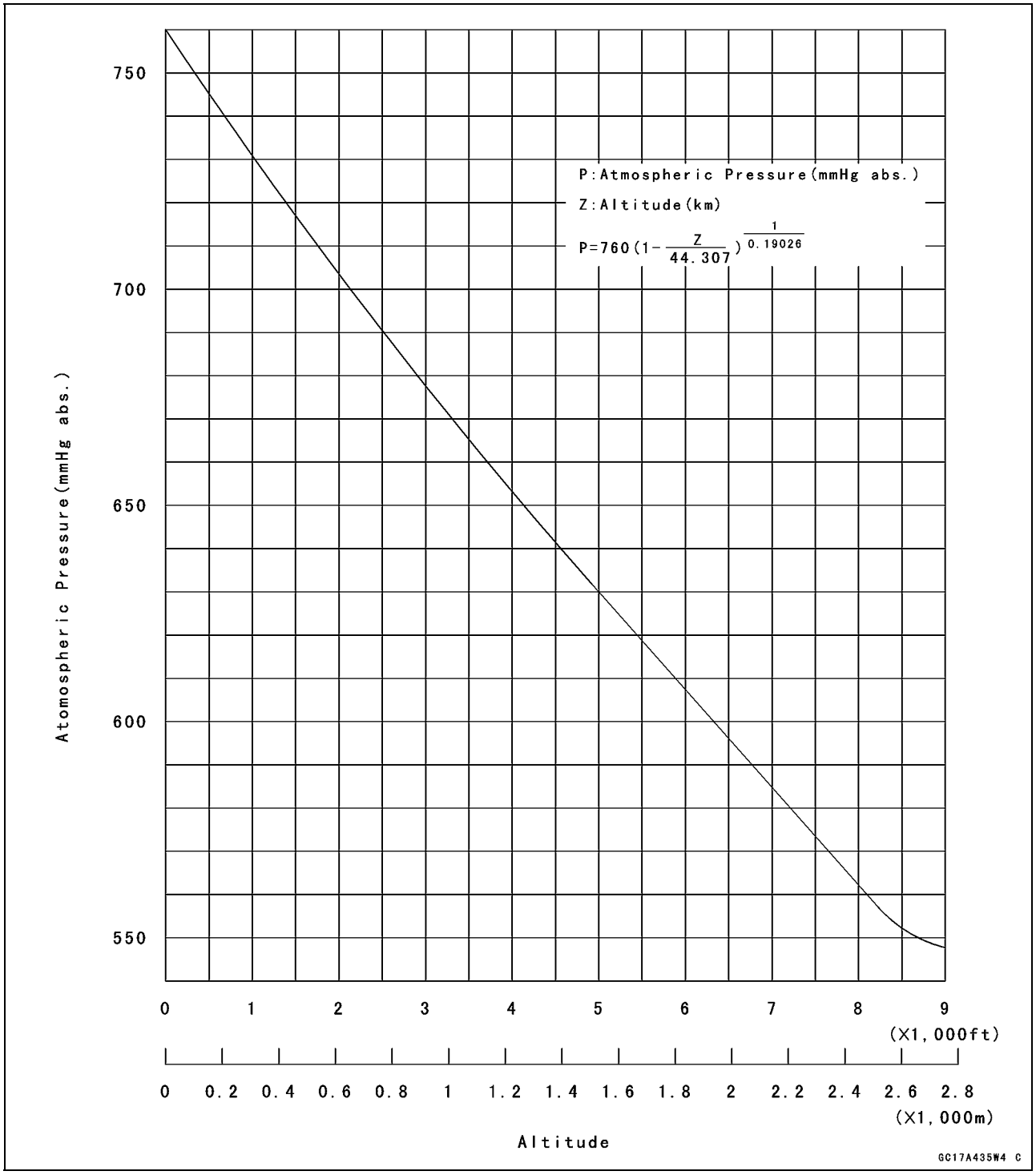

Crankshaft Sensor (Service Code 21)

Start the engine and switch the diagnosis mode to Dealer 1 mode to know all the problem that the DFI system has at the time of self-diagnosis. If the engine cannot be started, the self-diagnosis system does not detect dynamic condition of the crankshaft sensor. In this case turn off the ignition switch and turn it on again to enter the Dealer 2 mode. In this mode the system tells all the troubles which the DFI system had in both static and dynamic conditions.

Crankshaft Sensor Removal/Installation

- See the Ignition System section in the Electrical System chapter.

Crankshaft Sensor Inspection

○The crankshaft have no power source, and when the engine stops, the crankshaft generates no signals.

- Crank the engine and measure the peak voltage of the crankshaft sensor (see Electrical System chapter) in order to check the sensor.
- Check the wiring for continuity, using the following diagram.

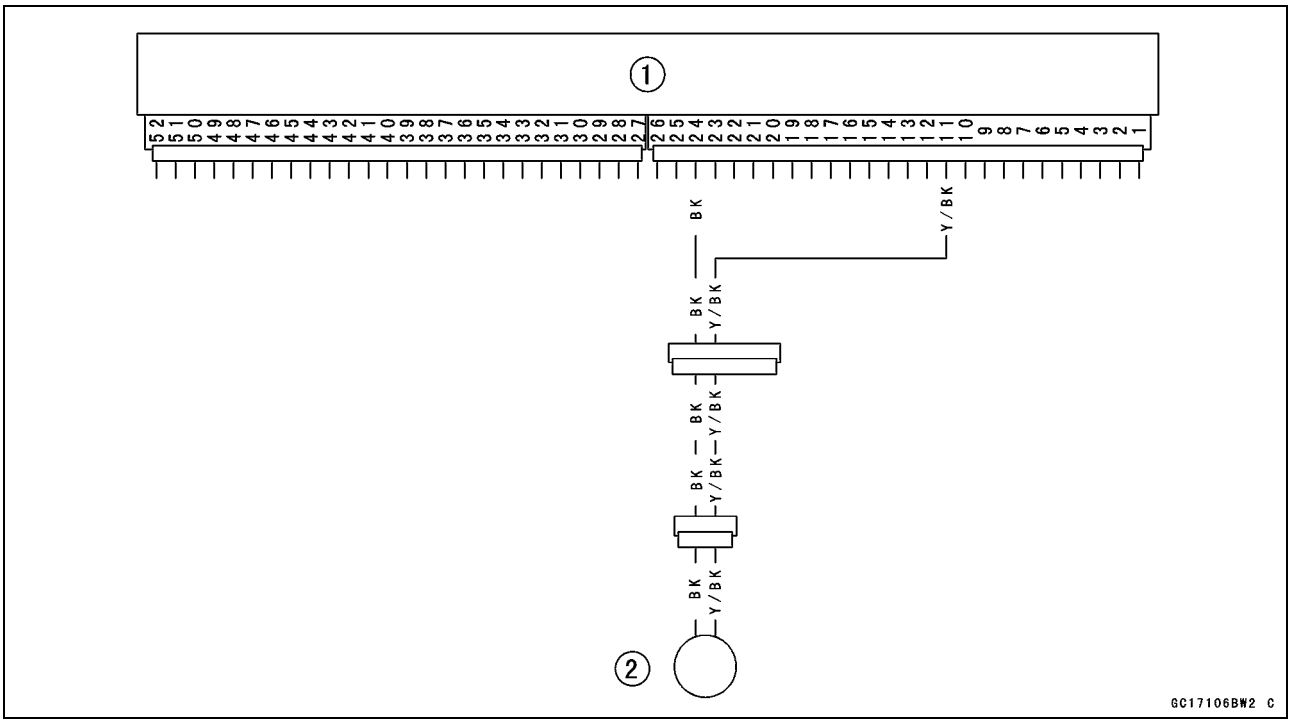

1. ECU
2. Crankshaft Sensor

Camshaft Position Sensor (Service Code 23)

Start the engine and switch the diagnosis mode to Dealer 1 mode to know all the problem that the DFI system has at the time of self-diagnosis. If the engine cannot be started, the self-diagnosis system does not detect dynamic condition of the camshaft position sensor. In this case turn off the ignition switch and turn it on again to enter the Dealer 2 mode. In this mode the system tells all the troubles which the DFI system had in both static and dynamic conditions.

Camshaft Position Sensor Removal/Installation

The camshaft position sensor detects the position of the camshaft, and distinguishes the cylinder.

- See the Ignition system section in the Electric System chapter.

Camshaft Position Sensor Inspection

○The camshaft position sensor have no power source, and when the engine stops, the camshaft position sensor generates no signal.

- Crank the engine and measure the peak voltage of the camshaft position sensor (see Electrical System chapter) in order to check the sensor.
- Check the wiring for continuity, using the following diagram.

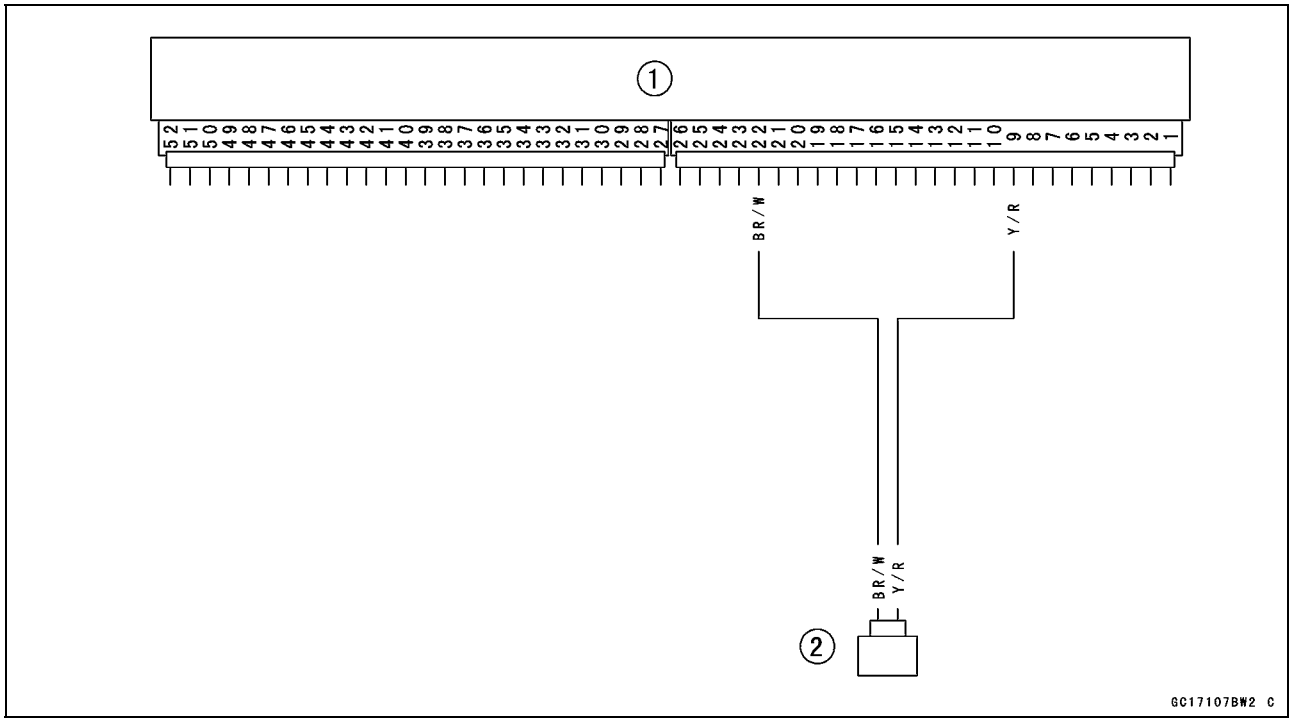

1. ECU
2. Camshaft Position Sensor

Speed Sensor (Service Code 24, 25)

Speed Sensor Removal/Installation

- See the Switches and Sensors section in teh Electrical System chapter.

Speed Sensor Inspection

- See the Switches and Sensors section in teh Electrical System chapter.

Input Voltage Inspection

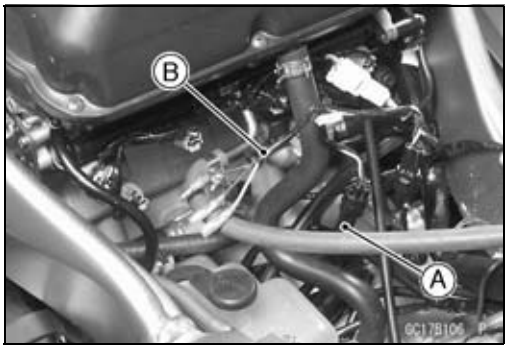

NOTE

○*Be sure the battery is fully charged.*

- Turn the ignition switch OFF.
- Remove the fuel tank (see Fuel Tank Removal).
- Disconnect the speed sensor connector [A] and connect the harness adapter [B] between the harness connector and speed sensor connector.
- Connect a digital meter to the harness adapter leads.

Special Tool - Throttle Sensor Setting Adapter: 57001-1400

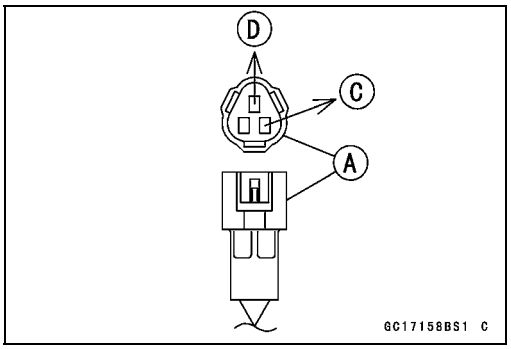

Speed Sensor Input Voltage
Connector to Sensor
Meter (+) → P lead [C]
Meter (−) → BK lead [D]

- Measure the sensor input voltage with the engine stopped, and with the connector joined.
- Turn the ignition switch ON.

Input Voltage at Sensor
Standard: About 9 ~ 11 V DC at Ignition SW ON

★If the reading is out of the range, check the wiring (see wiring diagram in this section), and meter (see Electrical System chapter).
★If the reading is good, check the output voltage.
- Turn the ignition switch OFF.

Output Voltage Inspection

- Before this inspection, inspect the input voltage (see Input Voltage Inspection).

NOTE

○*Be sure the battery is fully charged.*

- Turn the ignition switch OFF.

Speed Sensor (Service Code 24, 25)

- Disconnect the speed sensor connector [A] and connect the harness adapter [B] between the harness connector and speed sensor connector.
- Connect a digital meter to the harness adapter leads.

Special Tool - Throttle Sensor Setting Adapter: 57001 -1400

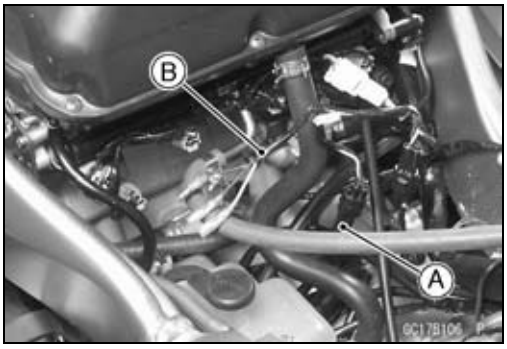

Throttle Sensor Output Voltage
Connections to Sensor
Meter (+) → Y lead [C]
Meter (–) → BK lead [D]

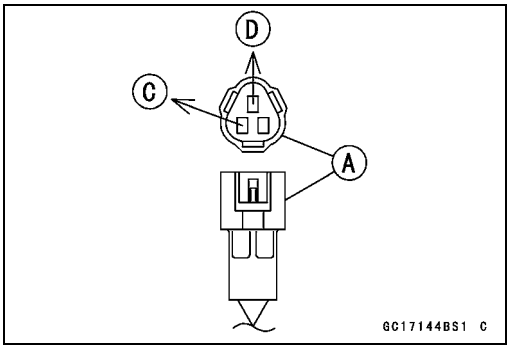

- Measure the sensor output voltage with the engine stopped, and with the connector joined.
- Turn the ignition switch ON.

Output Voltage at Sensor
Standard: About 0.05 ~ 0.07 V DC

NOTE

○*If you can rotate the engine sprocket, the output voltage will be raise.*

★If the reading is out of the range, check the speed sensor (see Electrical System chapter) and the wiring to ECU (see wiring diagram in this section).
★If the reading, speed sensor and wiring are good, replace the ECU.

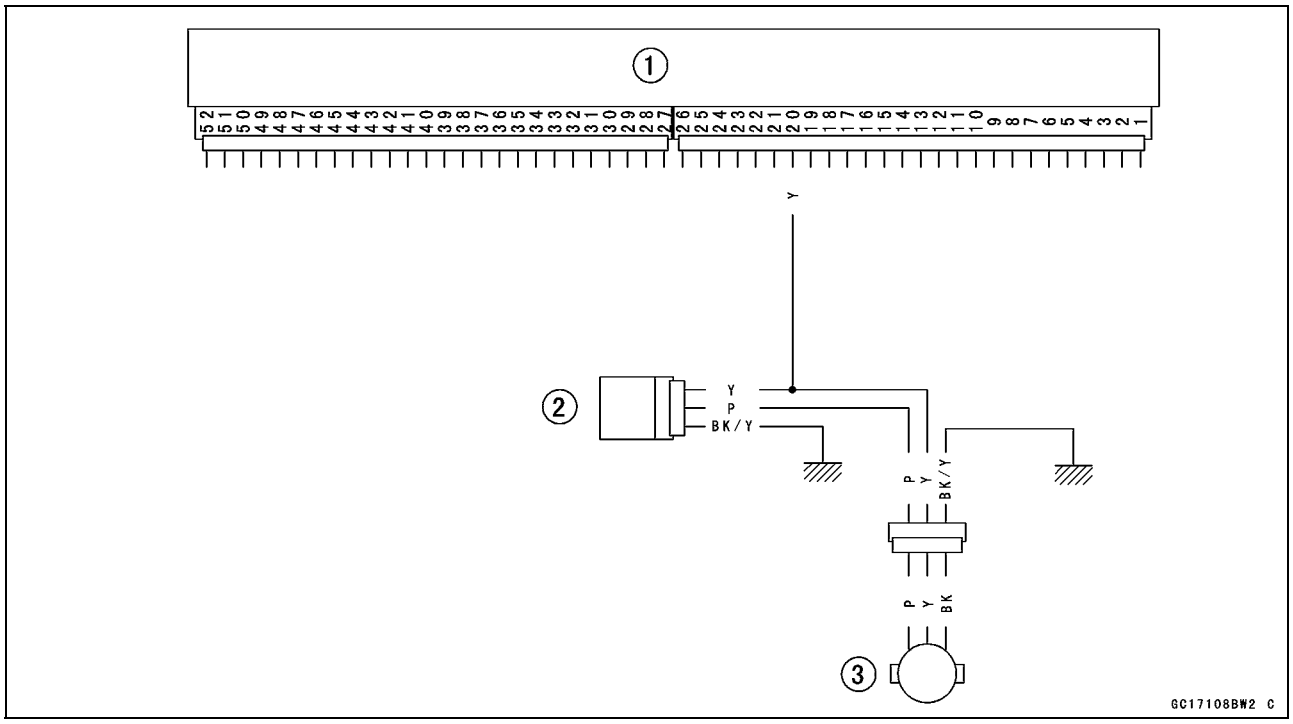

1. ECU
2. Meter Assembly
3. Speed Sensor

Vehicle-down Sensor (Service Code 31)

This sensor has a weight [A] with two magnets inside, and sends a signal to the ECU. But when the motorcycle banks 60 ~ 70° or more to either side (in fact falls down), the weight turns and shuts off the signal. The ECU senses this change, and stops the fuel pump, the fuel injectors, and the ignition system.

Hall IC [B]

When the motorcycle is down, the ignition switch is left ON. If the starter button is pushed, the electric starter turns but the engine doesn't start. To start the engine again, raise the motorcycle, turn the ignition switch OFF, and then ON. When the ignition switch is turned ON, current flows through the latch-up circuit and the transistor in the circuit is turned ON to unlock the latch-up circuit.

Vehicle-down Sensor [A]
Ground Terminal BK/Y [B]
Output Terminal Y/G [C]
Power Source Terminal W/Y [D]

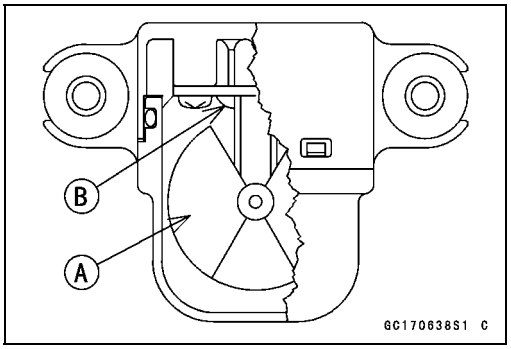

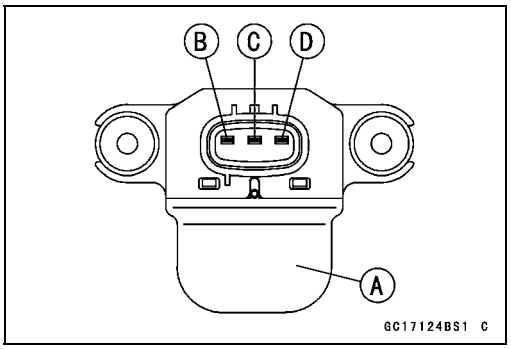

Removal

CAUTION

Never drop the down-sensor, especially on a hard surface. Such a shock to the sensor can damage it.

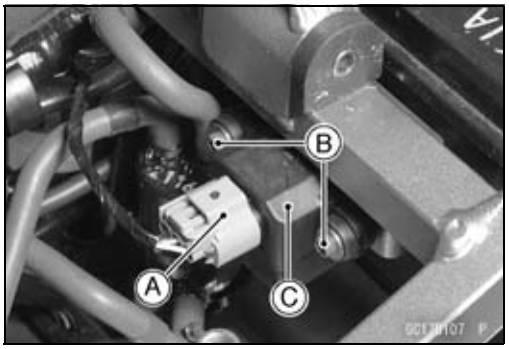

- Remove:
  Fuel Tank (see Fuel Tank Removal)
  Connector [A]
  Bolts [B]
  Vehicle-down Sensor [C] and Washers

Installation

- The UP mark [A] of the sensor should face upward.

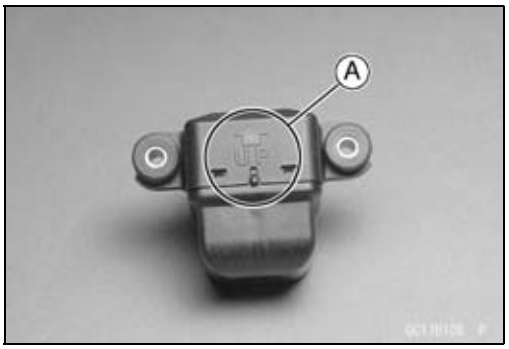

⚠ WARNING

Incorrect installation of the vehicle-down sensor could cause sudden loss of engine power. The rider could lose balance during certain riding situations, like leaning over in a turn, with the potential for an accident resulting in injury or death. Ensure that the down sensor is held in place by the sensor brackets.

Inspection

NOTE

○*Be sure the battery is fully charged.*

- Remove:
  Fuel Tank (see Fuel Tank Removal)

Vehicle-down Sensor (Service Code 31)

- Connect a digital volt meter [A] to the connector of the vehicle-down sensor [B], with the needle adapter set [C].

Vehicle-down Sensor Power Source Voltage
Connections to Sensor
Meter (+) → W/Y lead [D]
Meter (–) → BK/Y lead [E]

- Turn the ignition switch ON, and measure the power source voltage with the connector joined.

Power Source Voltage at Sensor
Standard: Battery Voltage (12.5 V or more)

- Turn the ignition switch OFF.

★If there is no battery voltage, check the following:
Battery (see Electrical System chapter)
ECU Main Fuse 15 A
Wiring for Vehicle-down Sensor Power Source (see next diagram)

★If the power source is normal, check the output voltage.

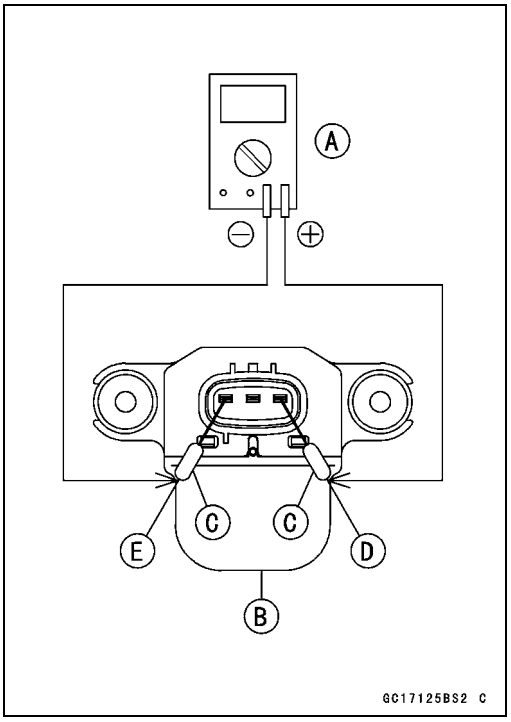

- Turn the ignition switch OFF.
- Remove the sensor.
- Connect a digital volt meter [A] to the connector, with needle adapter set [B].

Special Tool - Needle Adapter Set: 57001–1457

Vehicle-down Sensor Output Voltage
Connections to Sensor
Meter (+) → Y/G lead [D]
Meter (–) → BK/Y lead [E]

- Hold the sensor vertically.
- Turn the ignition switch ON, and measure the output voltage with the connector joined.

○Tilt the sensor 60 ~ 70° or more [C] right or left, then hold the sensor almost vertical with the arrow mark pointed up, and measure the output voltage.

Output Voltage at Sensor
Standard: with sensor tilted 60 ~ 70° or more right or left: 3.7 ~ 4.4 V
with sensor arrow mark pointed up: 0.4 ~ 1.4 V

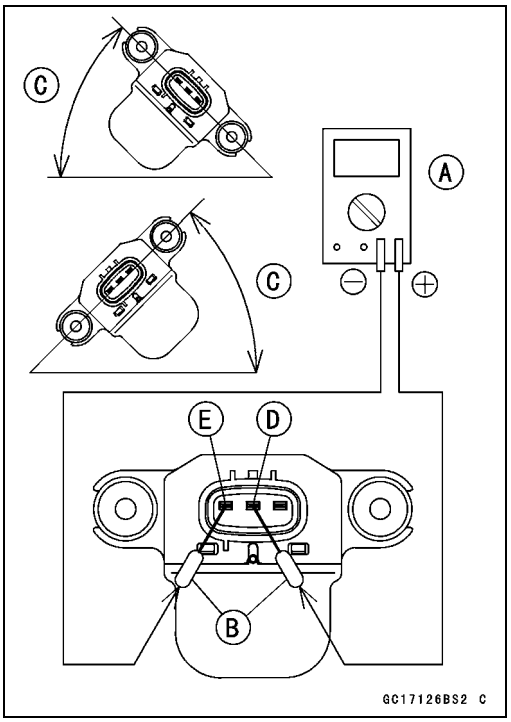

NOTE

○*If you need to test again, turn the ignition switch OFF, and then ON.*

Vehicle-down Sensor (Service Code 31)

- Turn the ignition switch OFF.
- Remove the needle adapter set, and apply silicone sealant to the seals of the connector for waterproofing.

Silicone Sealant (Kawasaki Bond: 56019-120)

- Seals of Vehicle-down Sensor Connector

★If the output voltage is normal, the wiring is suspect. Check the wiring.

★If the wiring is good, check the ECU for its ground and power supply (see this chapter). If the ground and power supply are good, replace the ECU.

★If the output voltage is out of the specified, replace the vehicle-down sensor.

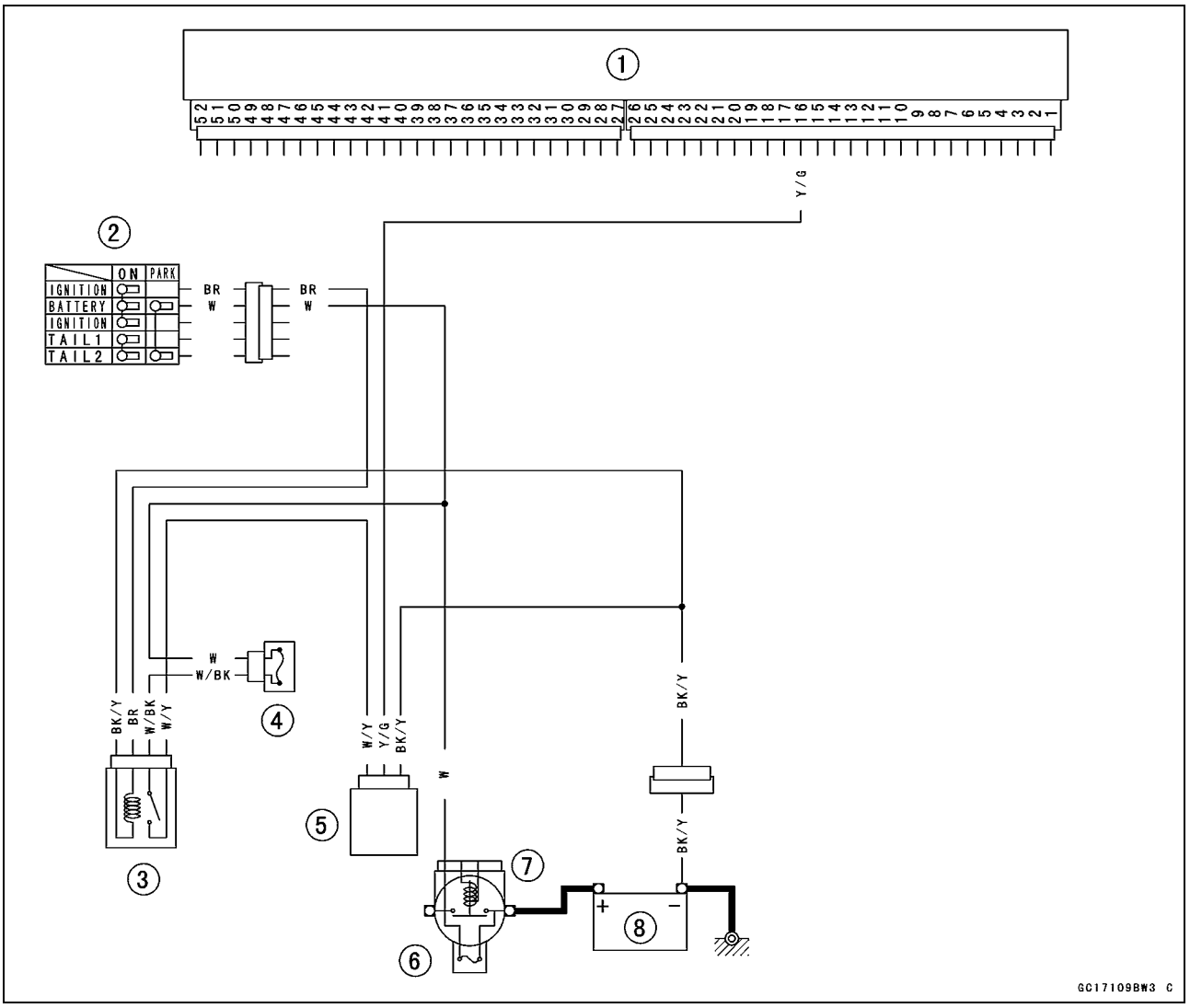

1. ECU
2. Ignition Switch
3. ECU Main Relay
4. ECU Main Fuse 15 A
5. Vehicle-down Sensor
6. Main Fuse 30 A
7. Starter Relay
8. Battery

Subthrottle Sensor (Service Code 32)

The subthrottle sensor is a rotating variable resistor that change output voltage according to throttle operating. The ECU senses this voltage change and determines fuel injection quantity, and ignition timing according to engine rpm, and throttle opening.

Input Terminal [A]
Output Terminal [B]
Ground Terminal [C]

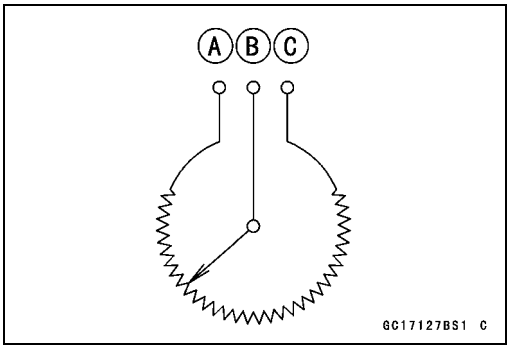

Subthrottle Sensor Removal/Adjustment

CAUTION

Do not remove or adjust the subthrottle sensor [A] since it has been adjusted and set with precision at the factory.
Never drop the sensor, especially on a hard surface. Such a shock to the sensor can damage it.

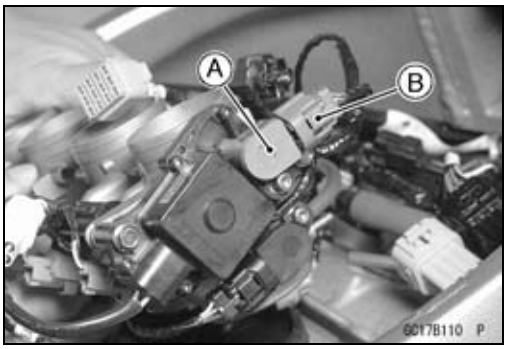

Subthrottle Sensor Connector [B]

Input Voltage Inspection

NOTE

○*Be sure the battery is fully charged.*
○*The inspection is the same as "Input Voltage Inspection" of the vacuum sensor and the atmospheric pressure sensor.*

- Turn the ignition switch OFF.
- Remove the ECU (see this chapter). Do not disconnect the ECU connectors.

- Connect a digital voltmeter [A] to the connector [B], using the needle adapter set.

Special Tool - Needle Adapter Set: 57001–1457

Subthrottle Sensor Input Voltage
Connections to ECU Connector
Meter (+)→ BL lead (terminal 1)
Meter (–)→ BR/BK lead (terminal 14)

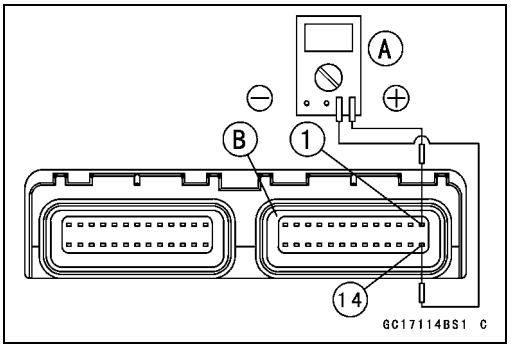

- Measure the input voltage with the engine stopped, and with the connectors joined.
- Turn the ignition switch ON.

Input Voltage at ECU Connector
Standard: 4.75 ~ 5.25 V DC

- Turn the ignition switch OFF.

★If the reading of input voltage is less than the standard, check the ECU for its ground, power supply and wiring shorted.
★If the input voltage is within the standard range, check the input voltage at the subthrottle sensor connector.

- Remove the throttle body assembly temporarily (see Throttle Body Assy Removal).

Subthrottle Sensor (Service Code 32)

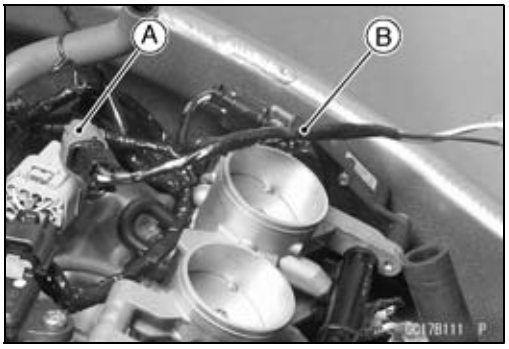

- Disconnect the subthrottle sensor connector [A] and connect the harness adapter [B] between the harness connector and sub throttle sensor connector.
- Connect a digital meter to the harness adapter leads.

Special Tool - Throttle Sensor Setting Adapter : 57001 -1538

Subthrottle Sensor Input Voltage
Connections to Sensor

Meter (+)→ BL lead

Meter (–)→ BR/BK lead

- Install the throttle body assembly.
- Measure the sensor input voltage with the engine stopped, and with the connector joined.
- Turn the ignition switch ON.

Input Voltage at Sensor
Standard: 4.75 ~ 5.25 V DC

- Turn the ignition switch OFF.

★If the reading is out of the range, check the wiring (see wiring diagram in this section).

★If the reading is good, check the output voltage of the sensor.

Output Voltage Inspection

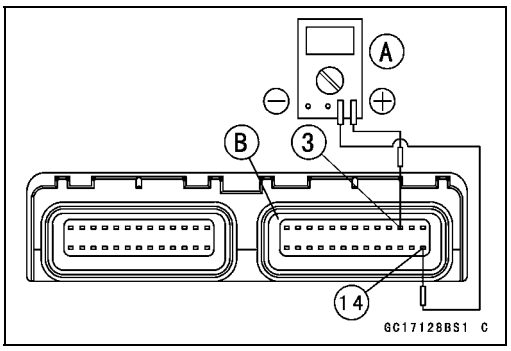

- Measure the output voltage at the ECU in the same way as input voltage inspection. Note the following.
  Digital Voltmeter [A]
  Connector [B]

Special Tool - Needle Adapter Set: 57001–1457

Subthrottle Sensor Output Voltage
Connections to ECU

Meter (+) → BR lead (terminal 3)

Meter (–) → BR/BK lead (terminal 14)

- Turn the ignition switch ON.
- Measure the output voltage when the subthrottle valve is fully opened or completely closed by hand.

Output Voltage at ECU

Standard:	**1.08 ~ 4.60 V DC (at subthrottle valve full opening to closing)**

NOTE

○*The throttle sensor is operating correctly if the following voltages are obtained:*
• 1.08 VDC (or slightly higher) with the subthrottle valve at the closed position.
• 4.60 VDC (or slightly lower) with the subthrottle valve at the fully open position.

CAUTION

Do not remove or adjust the subthrottle sensor. It has been adjusted and set with precision at the factory.
Never drop the sensor can especially on a hard surface. A shock to the sensor can damage it.

Subthrottle Sensor (Service Code 32)

★If the output voltage is within the standard range, check the ECU for a good ground, and power supply (see this chapter). If the ground and power supply are good, replace the ECU.
★If the output voltage is far out of the standard range (e.g. when the wiring is open, the reading is 0 V), check the output voltage again at the sensor connector.

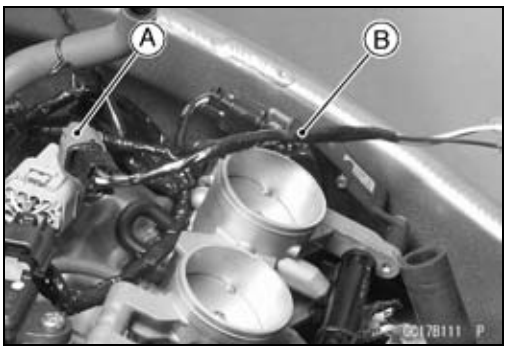

- Disconnect the subthrottle sensor connector [A] and connect the harness adapter [B] between the harness connector and sub throttle sensor connector.
- Connect a digital meter to the harness adapter leads.

Special Tool - Throttle Sensor Harness Adapter : 57001–1538

Subthrottle Sensor Output Voltage
Connections to Sensor
Meter (+) → BR lead
Meter (–) → BR/BK lead

- Measure the sensor output voltage with the engine stopped, and with the connector joined.
- Turn the ignition switch ON.
- Measure the output voltage when the subthrottle valve is fully opened or completely closed by hand.

Output Voltage at Sensor
Standard: 1.08 ~ 4.60 V DC (at subthrottle valve full opening to closing)

NOTE

○*The throttle sensor is operating correctly if the following voltages are obtained:*
• 1.08 VDC (or slightly higher) with the subthrottle valve at the closed position.
• 4.60 VDC (or slightly lower) with the subthrottle valve at the fully open position.

CAUTION

Do not remove or adjust the subthrottle sensor. It has been adjusted and set with precision at the factory.
Never drop the sensor, especially on a hard surface. A shock to the sensor can damage it.

NOTE

○*The standard voltage marked with an asterisk refers to the value when the voltage reading at the Input Voltage Inspection shows 5V exactly.*
○*When the input voltage reading shows other than 5V, derive a voltage range as follows.*
Example:
In the case of a input voltage of 4.75 V.
1.08 × 4.75 ÷ 5.00 = 1.03 V
4.60 × 4.75 ÷ 5.00 = 4.37 V
Thus, the valid range is 1.03 ~ 4.37 V

Subthrottle Sensor (Service Code 32)

- After subthrottle sensor voltage inspection, remove the harness adapter.

★If the reading is out of the standard range, inspect the throttle sensor resistance.

★If the output voltage is normal, check the wiring for continuity (see next diagram).

Resistance Inspection

- Turn the ignition switch OFF.
- Disconnect the subthrottle sensor connector.
- Connect a digital meter [A] to the subthrottle sensor connector [B].
- Measure the main throttle sensor resistance.

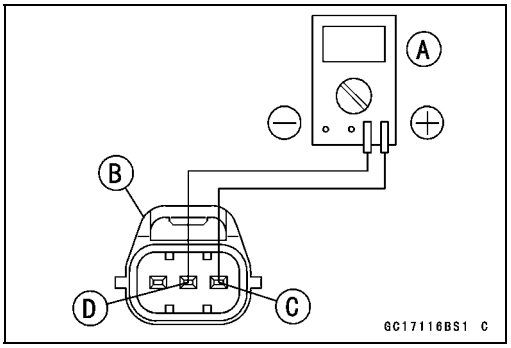

Throttle Sensor Resistance

Connections: **BL lead [C] ⟷ BR/BK lead [D]**

Standard: **4 ~ 6 kΩ**

★If the reading is out of the range, replace the throttle body assy.

★If the reading is within the range, but the problem still exists, replace the ECU (see this chapter).

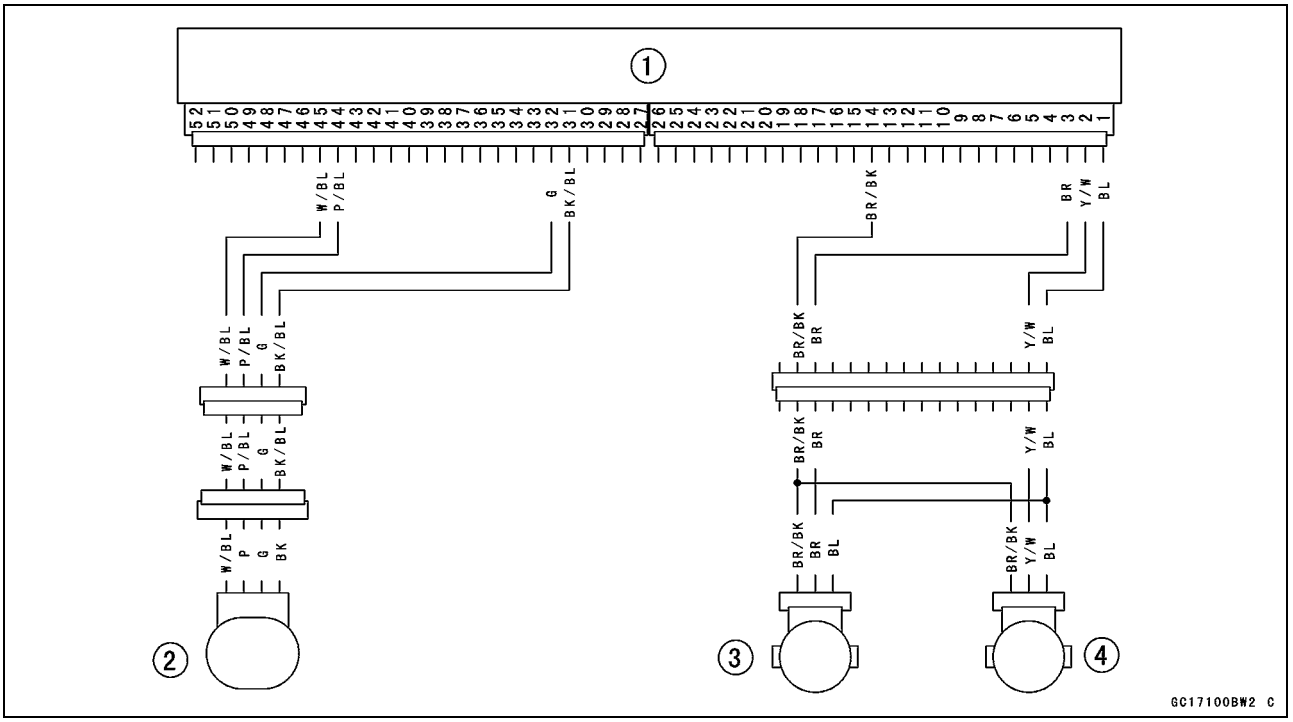

1. ECU
2. Subthrottle Valve Actuator
3. Subthrottle Sensor
4. Main Throttle Sensor

Stick Coils (#1, #2, #3, #4: Service Code 51, 52, 53, 54)

Stick Coil #1: Ignition Coil (Service Code 51)
Stick Coil #2: Ignition Coil (Service Code 52)
Stick Coil #3: Ignition Coil (Service Code 53)
Stick Coil #4: Ignition Coil (Service Code 54)

Removal/Installation

CAUTION

Never drop the ignition coils, especially on a hard surface. Such a shock to the ignition coil can damage it.

- See Ignition System section in the Electrical System chapter.

Input Voltage Inspection

NOTE

○*Be sure the battery is fully charged.*

- Turn the ignition switch OFF.
- Remove the ECU (see this chapter). Do not disconnect the ECU connector.
- Connect a digital voltmeter [A] as shown, with the needle adapter set [B].

○Measure the input voltage to each primary winding of the ignition coils with the engine stopped, and with the connectors joined.

- Turn the ignition switch ON.

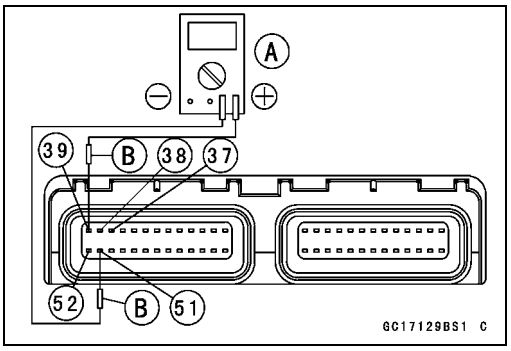

Stick Coil Input Voltage at ECU

Connections for Stick Coil #1

Meter (+) → BK lead (terminal 39)

Meter (–) → BK/Y lead (terminal 51)

Connections for Stick Coil #2

Meter (+) → BK/G lead (terminal 38)

Meter (–) → BK/Y lead (terminal 51)

Connections for Stick Coil #3

Meter (+) → BK/W lead (terminal 37)

Meter (–) → BK/Y lead (terminal 51)

Connections for Stick Coil #4

Meter (+) → BK/O lead (terminal 52)

Meter (–) → BK/Y lead (terminal 51)

Input Voltage at ECU

Standard: Battery Voltage (12.5 V or more)

★If the reading is out of the standard, check the wiring (see next wiring diagram).

★If the reading is good, the input voltage is normal. Crank the engine, and check the peak voltage of the stick coils (see Electrical System chapter) in order to check the primary coils.

Stick Coils (#1, #2, #3, #4: Service Code 51, 52, 53, 54)

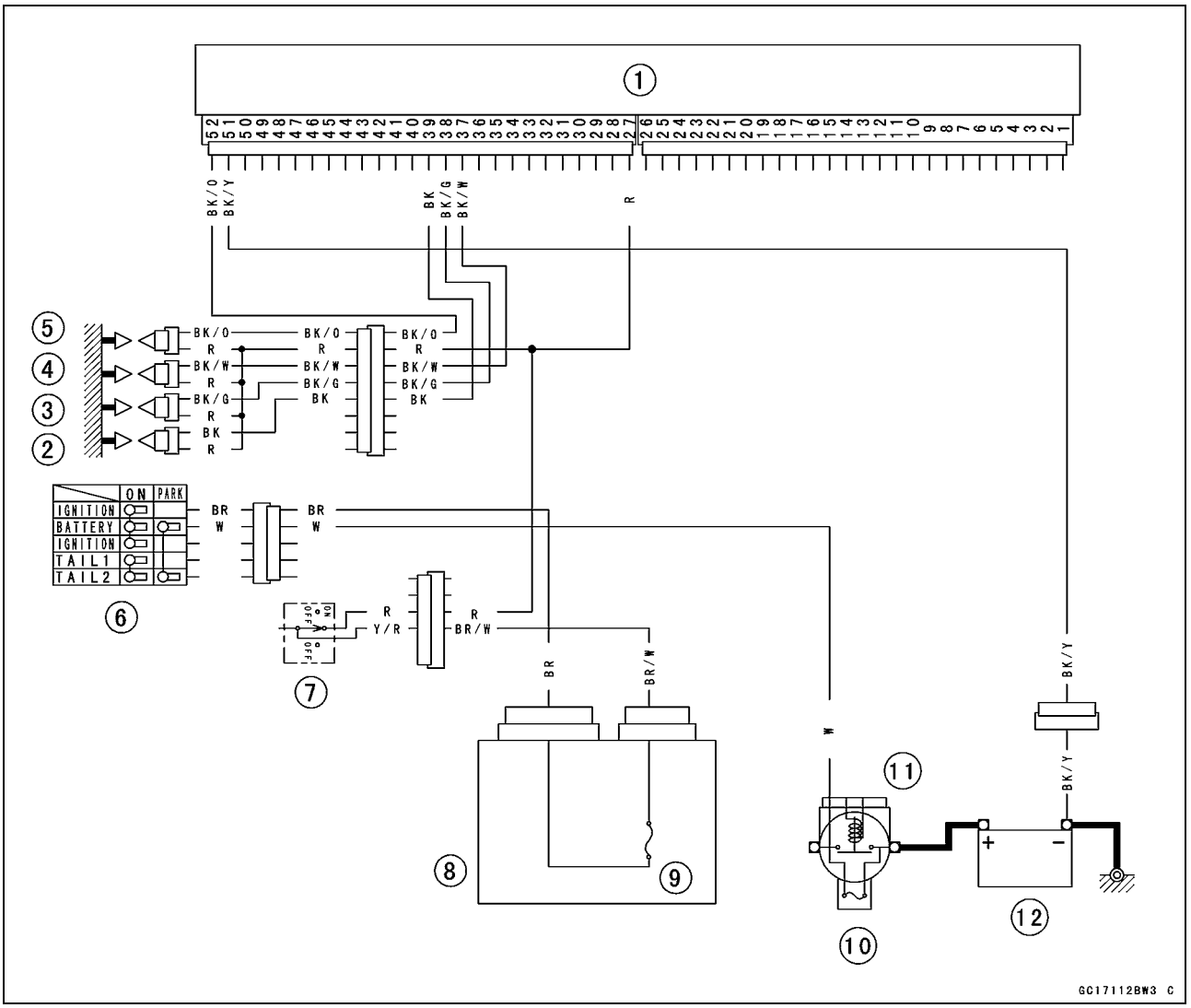

1. ECU
2. Stick Coil #1
3. Stick Coil #2
4. Stick Coil #3
5. Stick Coil #4
6. Ignition Switch
7. Engine Stop Switch
8. Junction Box
9. Ignition Fuse 10 A
10. Main Fuse 30 A
11. Starter Relay
12. Battery

Subthrottle Valve Actuator (Service Code 62)

Subthrottle Valve Actuator Removal

CAUTION

Do not remove the subthrottle valve actuator [A] since it has been adjusted and set with precision at the factory.
Never drop the actuator , especially on a hard surface. Such a shock to the actuator can damage it.

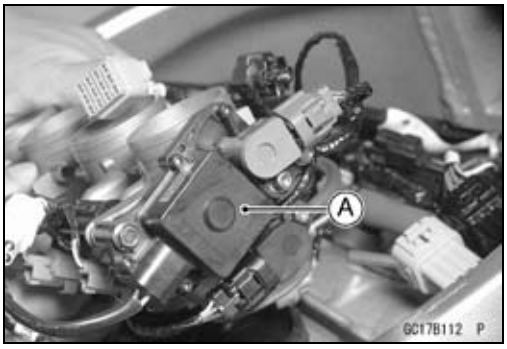

Subthrottle Valve Actuator Inspection

- Remove the air cleaner housing (see Air Cleaner Housing Removal).
- Turn the ignition switch ON.
- Check to see that all subthrottle valves [A] open and close smoothly.

★If the subthrottle valves do not operate, check the actuator internal resistance (see Resistance Inspection).

Resistance Inspection

- Turn the ignition switch OFF.
- Disconnect the subthrottle valve actuator connector [A].

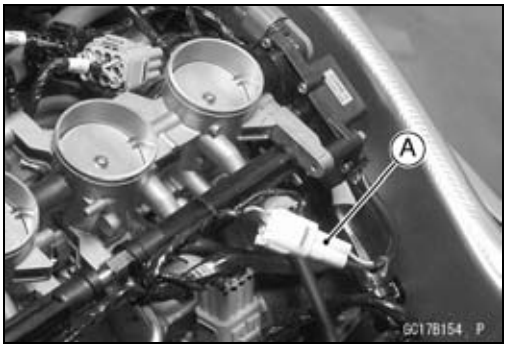

- Connect a digital meter to the subthrottle valve actuator connector [A].
- Measure the subthrottle valve actuator resistance.

Subthrottle Valve Actuator Resistance

Connections:	**BK lead [1] ←→ P lead [2]**
	G lead [3] ←→ W/BL lead [4]
Standard:	**About 5 ~ 7 Ω**

★If the reading is out of the range, replace the throttle body assy.

★If the reading is within the range, check the input voltage (see Input Voltage Inspection).

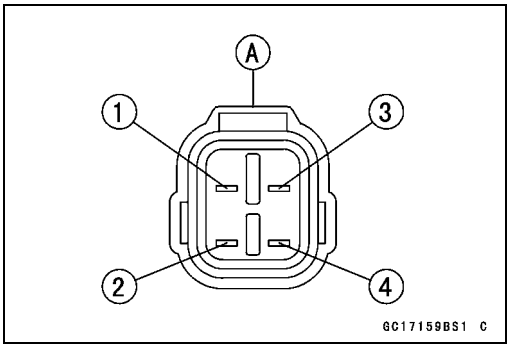

Subthrottle Valve Actuator (Service Code 62)

Input Voltage Inspection

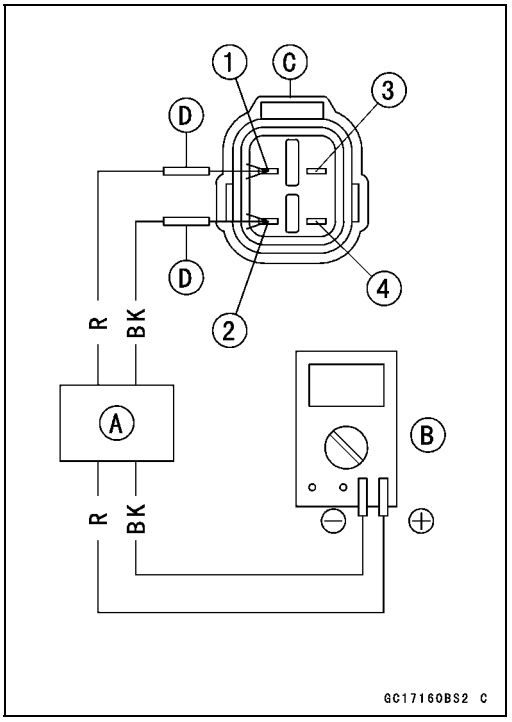

NOTE

○*Be sure the battery is fully charged.*

- Turn the ignition switch OFF.
- Connect the peak voltage adaper [A] and a digital meter [B] to the connector [C], using the needle adapter set [D].

Recommended Tool - Peak Voltage Adapter
Type: KEK-54–9–B
Brand: KOWA SEIKI

Special Tool - Needle Adapter Set: 57001-1457

Subthrottle Valve Actuator Input Voltage Connections to Harness Connector

(I) Meter (+) → BK/BL lead [1]
Meter (–) → P/BL lead [2]
(II) Meter (+) → G lead [3]
Meter (–) → W/BL lead [4]

- Measure the actuator input voltage with the engine stopped, and with the connector joined.
- Turn the ignition switch ON.

Input Voltage at Sensor
Standard: about 8.5 ~ 10.5 V DC

★If the reading is out of the range, check the wiring to ECU (see wiring diagram in this section).
★If the wiring is good, replace the ECU.

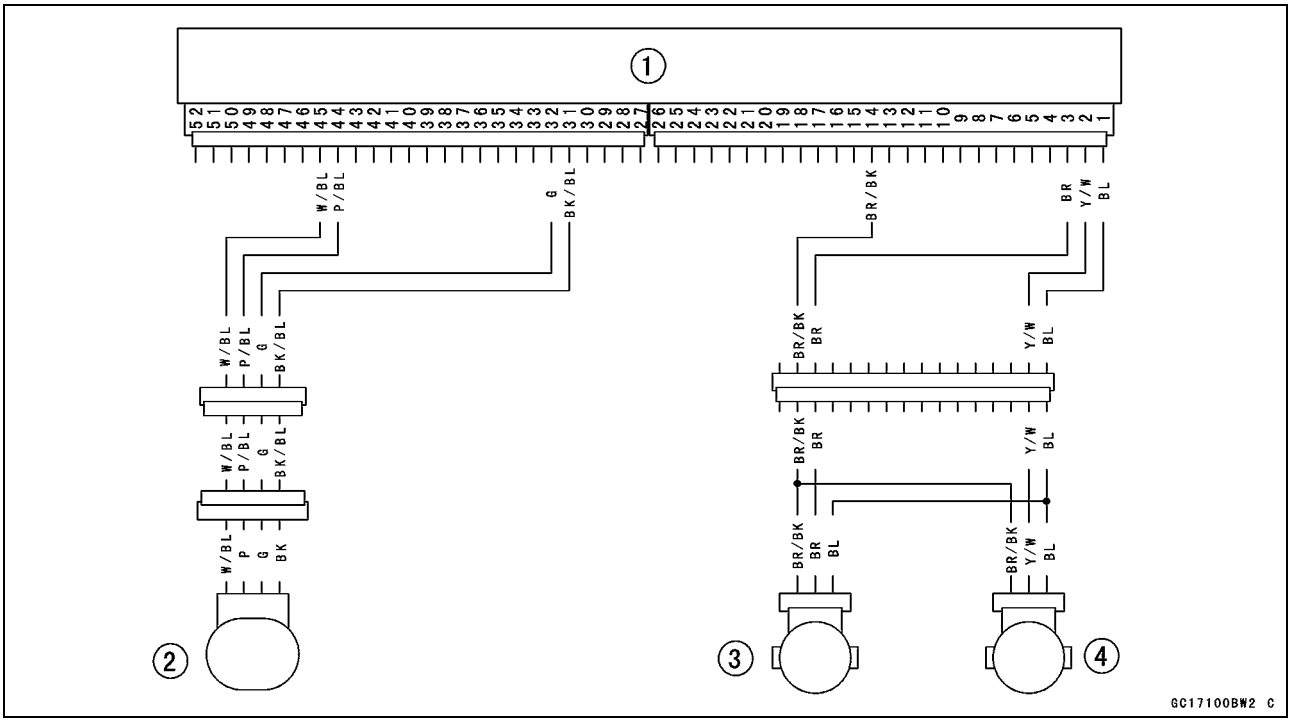

1. ECU
2. Subthrottle Valve Actuator
3. Subthrottle Sensor
4. Main Throttle Sensor

Throttle Grip and Cables

Free Play Inspection

- Refer to the Throttle Control System Inspection in the Periodic Maintenance chapter.

Free Play Adjustment

- Refer to the Throttle Control System Inspection in the Periodic Maintenance chapter.

Cable Installation

- Install the throttle cables in accordance with the Cable Routing section in the Appendix chapter.
- Install the lower ends of the throttle cables in the cable bracket on the throttle assy after installing the upper ends of the throttle cables in the grip.
- After installation, adjust each cable properly.

⚠ WARNING

Operation with incorrectly routed or improperly adjusted cables could result in an unsafe riding condition.

Cable Lubrication

- Refer to the General Lubrication Perform in the Periodic Maintenance chapter.

Choke Cable

Free Play Inspection

- Push the choke lever [A] all the way to the front.
- Check choke cable free paly [B].

○Determine the amount of choke cable play at the choke lever. Pull the choke lever till just before the inner cable [C] moves the link lever [D]; the amount of choke lever travel is the amount of cable play.

★If the free play is incorrect, adjust the choke cable.

Choke Cable Free Play
Standard: 2 ~ 3 mm (0.08 ~ 0.12 in)

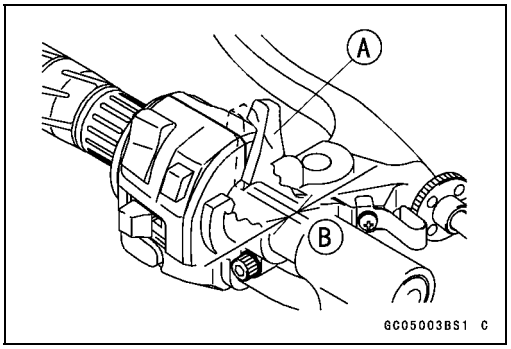

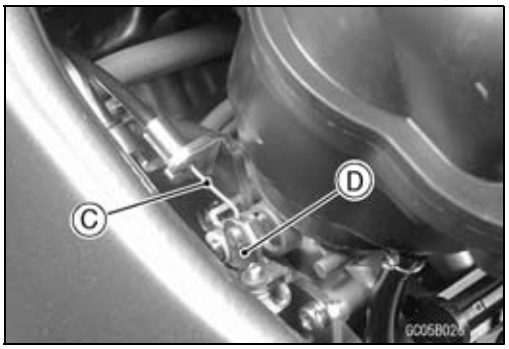

Free Play Adjustment

- Loosen the locknut [A], and turn the adjuster [B] until the cable has the proper amount of free play.
- Tighten the locknut securely.

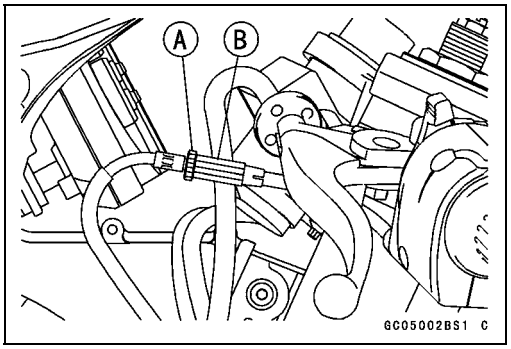

Choke Cable Installation

- Install the choke cable in accordance with the Cable Routing section in the General Information chapter.
- After installation, adjust the cable properly.

⚠ WARNING

Operation with an incorrectly routed or improperly adjusted cable could result in an unsafe riding condition.

Cable Lubrication

- Refer to the General Lubrication Perform in the Periodic Maintenance chapter.

Throttle Body Assy

Idle Speed Inspection

- Refer to the Idle Speed Inspection in the Periodic Maintenance chapter .

Throttle Bore Cleaning

- Refer to the Throttle Control System Inspection in the Periodic Maintenance chapter.

Synchronization Inspection

- Refer to the Engine Vacuum Synchronization Inspection in the Periodic Maintenance chapter.

Synchronization Adjustment

- Refer to the Engine Vacuum Synchronization Inspection in the Periodic Maintenance chapter.

Throttle Body Assy Removal

⚠ WARNING

Gasoline is extremely flammable and can be explosive under certain conditions. Turn the ignition switch OFF. Disconnect the battery (–) cable terminal. Do not smoke. Make sure the area is well-ventilated and free from any source of flame or sparks; this includes any appliance with a pilot light.
Be prepared for fuel spillage: any spilled fuel must be completely wiped up immediately.

- Remove:
  Fuel Tank (see Fuel Tank Removal)
  Air Cleaner Housing (see Air Cleaner Housing Removal)
- Be sure to place a piece of cloth around the fuel supply pipe [A] of the throttle body assembly.
- Remove:
  Gray Connectors [B]
  Water Temperature Sensor Connector [C]

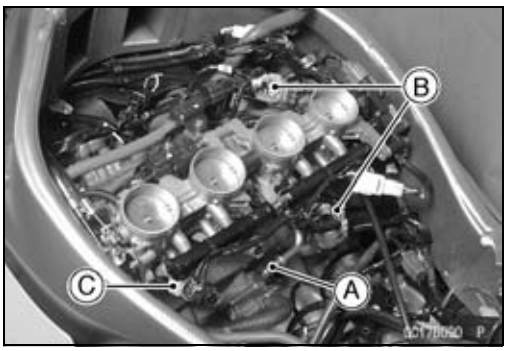

- Remove:
  Vacuum Switch Valve Vacuum Hose
  Vacuum Hose [A] (California model)
- Loosen:
  Clamp Bolts [B]

Special Tool - Carburetor Drain Plug Wrench, Hex 3: 57001-1269

- Remove the throttle body assembly [C] from holder.

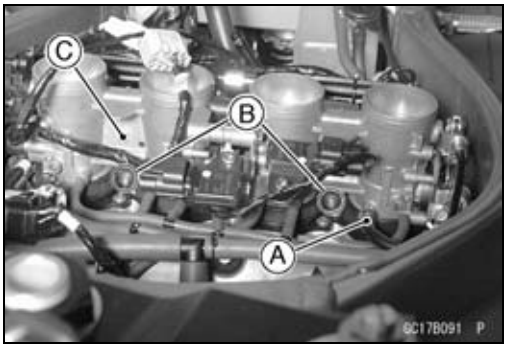

Throttle Body Assy

- Remove:
  Choke Cable Lower End [A]
- Remove the throttle case to make a throttle cable slack.
- Remove:
  Throttle Cable Lower Ends [B]

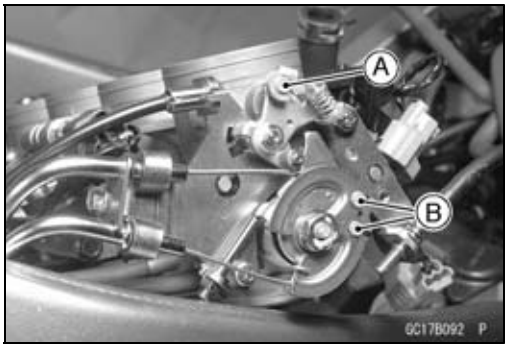

- After removing the throttle body assy, stuff pieces of lint -free, clean cloths into the throttle body holders.

CAUTION
If dirt gets into the engine, excessive engine wear and possible engine damage will occur.

Throttle Body Assy Installation

- Install the holder clamp bolts [A] in the direction as shown.
  [B] Bolt Heads
- Tighten:

  Torque - Throttle Body Assembly Holder Clamp Bolts: 3.0 N·m (0.31 kgf·m, 27 in·lb)
- Run the vacuum hoses as shown in the Cable, Wire, and Hose Routing section of the Appendix chapter.
- When installing the fuel hose, refer to Fuel Tank Installation.

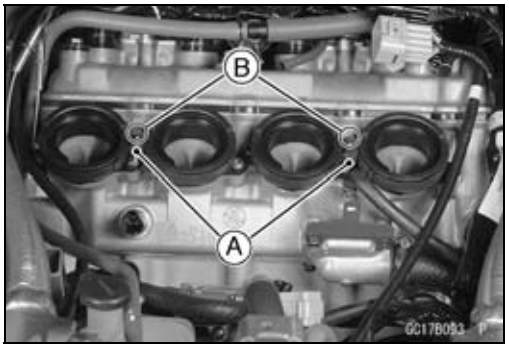

- Adjust:
  Throttle Grip Free Play
  Choke Lever Free Play
  Idle Speed

Throttle Body Assy

Throttle Body Assy Disassembly

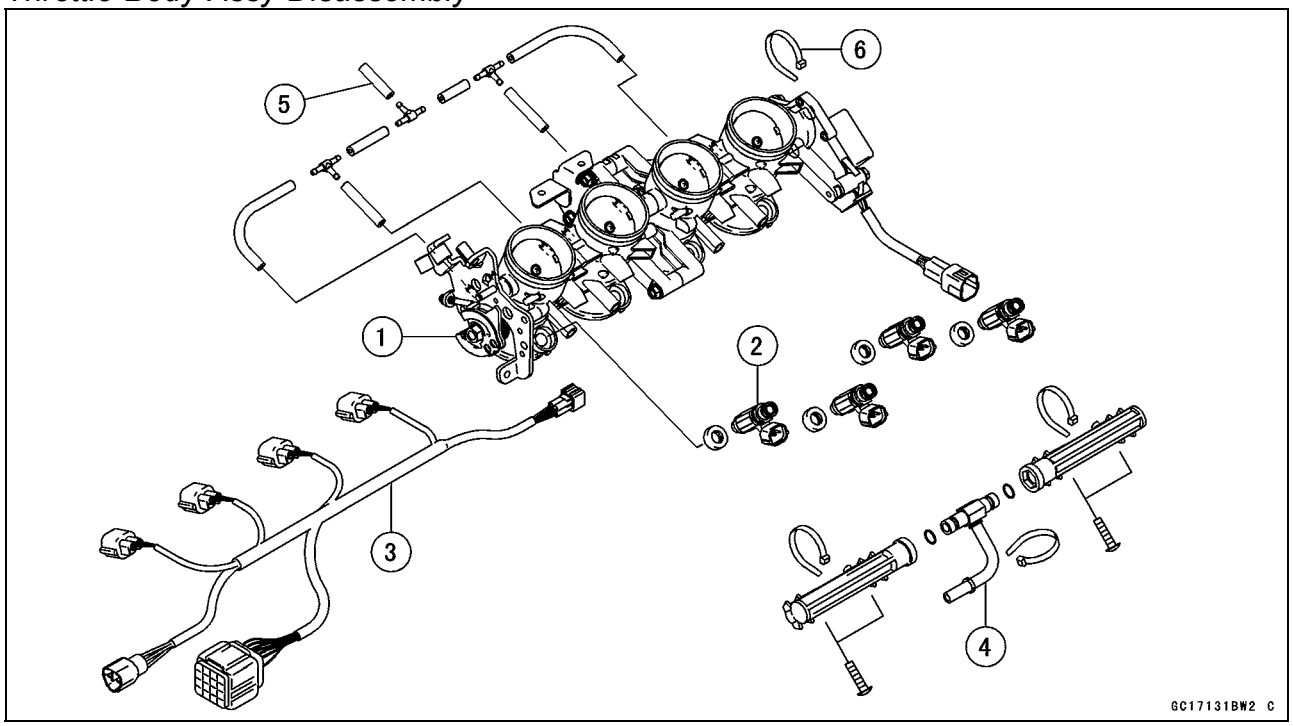

1. Throttle Body Assy
2. Injectors
3. Injector Connector Harness
4. Delivery Pipe Assy
5. Inlet Air Pressure Sensor Hoses
6. Bands

CAUTION

Do not remove, disassemble or adjust the main throttle sensor, subthrottle sensor, subthrottle valve actuator, throttle link mechanism and throttle body assy, because they are adjust or set surely at the manufacturer. Adjustment of these parts could result in poor performance, requiring replacement of the throttle body assy.

- Remove the throttle body assembly (see Throttle Body Assy Removal).
- Pressing the tabs [A] of each injector connectors, pull out the each connectors.
- Remove the screws [B] to pull out the injector assys from the throttle body assy together with the delivery pipe [C].

NOTE

○*Do not damage the part of insert of the injectors when they are pulled out from the throttle body.*

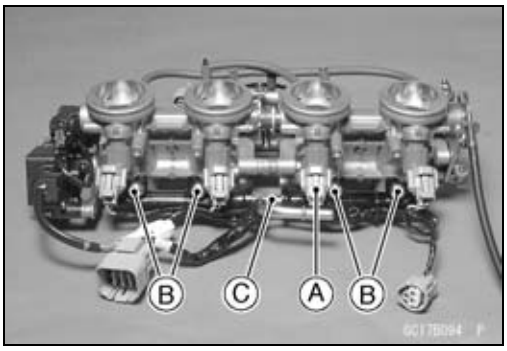

Throttle Body Assy

- Pull out the injectors [A] from the delivery pipe [B].

NOTE

○*Do not damage the part of insert of the injectors when they are pulled out from the delivery pipe.*

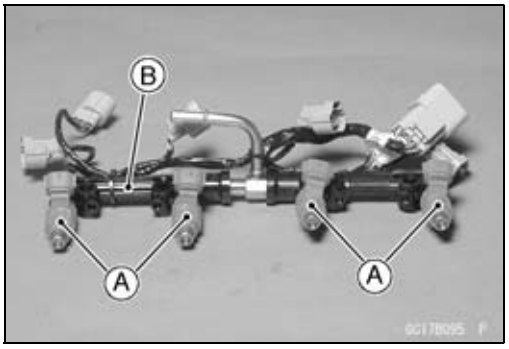

Throttle Body Assy Assembly

- Before assembling, blow away dirt or dust from the throttle body and delivery pipe by applying compressed air.
- Apply daphne oil or engine oil to the new O-rings [A] of each injector, insert them to the delivery pipe [B] and confirm whether the injectors turn smoothly or not.

NOTE

○*Replace the O-ring of injectors and the dust seals of delivery pipe to new one.*

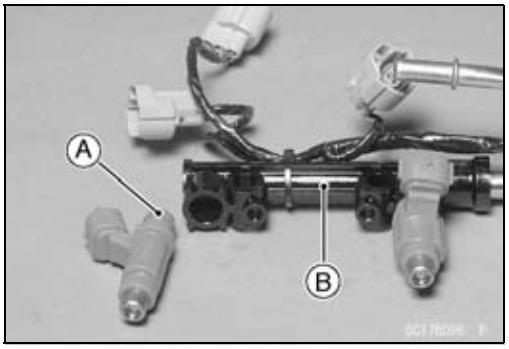

- Apply daphne oil or engine oil to the new dust seals [A], insert the injectors installed to the delivery pipe to the throttle body.

NOTE

○*Replace the dust seals of the throttle body to new one.*

- Install the delivery pipe assy to the throttle body.

Torque - Fuel Delivery Pipe Mounting Screws: 3.4 N·m (0.35 kgf·m, 30 in·lb)

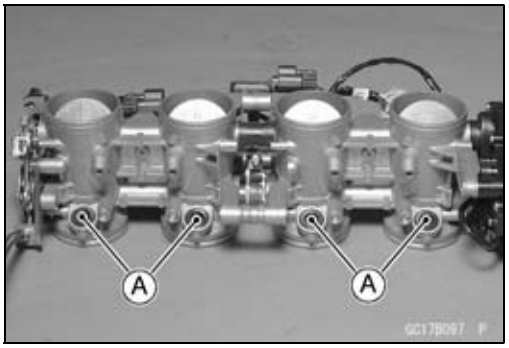

- Install the injector connectors to each injector, and bind the connector lead with clamps [A].
- Insert the each hoses to the throttle body fittings.
- Install the throttle body assy (see Throttle Body Assy Installation).

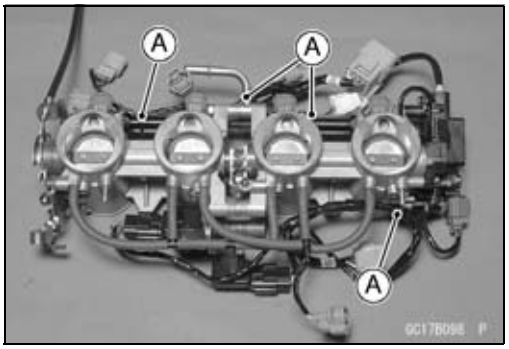

Air Line

Element Removal

- Refer to Air Cleaner Element Replacement in the Periodic Maintenance chapter.

Element Installation

- Refer to Air Cleaner Element Replacement in the Periodic Maintenance chapter.

Air Cleaner Element Inspection

- Visually check the element [A] for tears or breaks.

★If the element has any tears or breaks, replace the element.

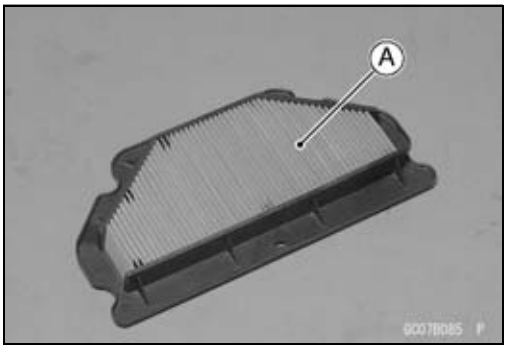

Oil Draining

A drain hose is connected to the bottom of the air cleaner part to drain water or oil accumulated in the cleaner part.

- Visually check the catch tank [A] of the drain hose if the water or oil accumulates in tank.

★If any water or oil accumulates in the tank, remove the tank from the drain hose and drain it.

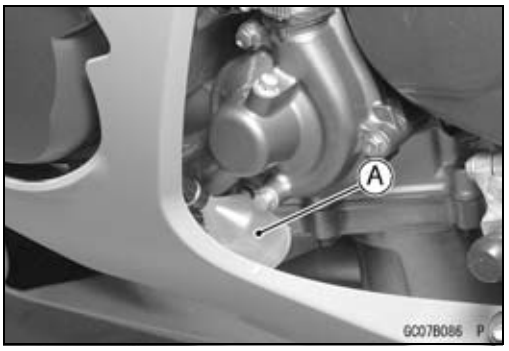

⚠ WARNING

Be sure reinstall the catch tank in the drain hose after draining. Oil on tires will make them slippery and can cause an accident and injury.

Air Inlet Duct Removal

- Remove:
  Upper Fairing (see Frame chapter)
  Mounting Bolts [A]
  Air Inlet Duct [B]

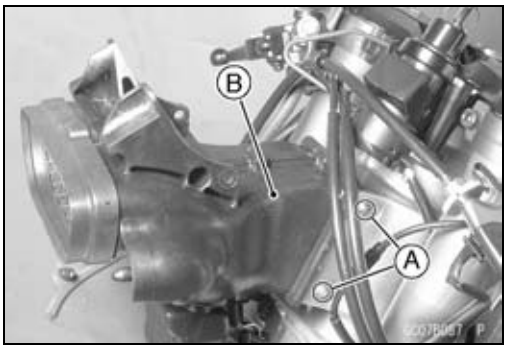

Air Inlet Duct Installation

- Tighten:

Torque - Air Inlet Duct Mounting Bolts: 6.9 N·m (0.70 kgf·m, 61 in·lb)

Fuel Tank

Fuel Tank Removal

⚠ WARNING

Gasoline is extremely flammable and can be explosive under certain conditions. Make sure the area is well-ventilated and free from any source of flame or sparks; this includes any appliance with a pilot light. Do not smoke. Turn the ignition switch OFF. Be prepared for fuel spillage; any spilled fuel must be completely wiped up immediately.

CAUTION

For California model, if gasoline, solvent, water or any other liquid enters the canister, the canister's vapor absorbing capacity is greatly reduced. If the canister does become contaminated, replace it with a new one.

- Remove:
  Seats (see Frame chapter)
  Fuel Tank Bolts [A]
  Drain Hose [B]
- Open the fuel tank cap to lower the pressure in the tank.

- Disconnect the fuel pump lead connector [A].
- Be sure to place a piece of cloth around the fuel hose joint [B].
- While pinching the hose joint locks [C] with fingers, pull the joint out along the delivery pipe.

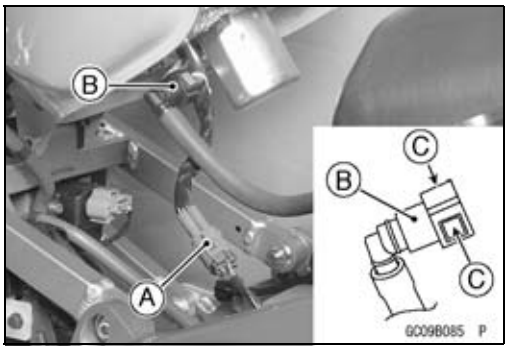

⚠ WARNING

Be prepared for fuel spillage; any spilled fuel must be completely wiped up immediately.
When the fuel hose is disconnected, fuel spills out from the hose and the pipe because of residual pressure. Cover the hose connection with a piece of clean cloth to prevent fuel spillage.

- Remove the fuel tank, and place it on a flat surface.

Fuel Tank

- For California Model, note the following:

○Be sure to plug the evaporative fuel return hose to prevent fuel spilling before fuel tank removal.

⚠ WARNING

For California model, be careful not to spill the gasoline through the return hose. Spilled fuel is hazardous.

★If liquid or gasoline flows into the breather hose, remove the hose and blow it clean with compressed air (California model).

○Be careful of fuel spillage from the fuel tank since fuel still remains in the fuel tank and fuel pump.

⚠ WARNING

Store the fuel tank in an area which is well -ventilated and free from any source of flame or sparks. Do not smoke in this area. Place the fuel tank on a flat surface and plug the fuel pipes to prevent fuel leakage.

Fuel Tank Installation

- Note the above WARNING (see Fuel Tank Removal).
- Route the hoses correctly (see Appendix chapter).
- Check that the rubber dampers [A] are on the air cleaner housing.

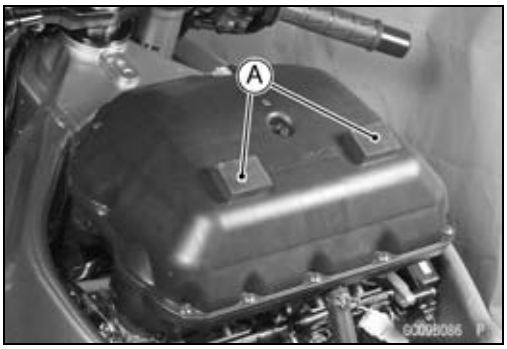

- Check that the dampers [A] are in place on the fuel tank as well.

★If the dampers are damaged or deteriorated, replace them.

★If the dampers are damaged or deteriorated, replace them.

- For California Model, note the following:

○To prevent the gasoline from flowing into or out of the canister, hold the separator perpendicular to the ground.

○Connect the hoses according to the diagram of the system (see Cable, Wire, and Hose Routing section in the Appendix chapter). Make sure they do not get pinched or kinked.

○Route hoses with a minimum of bending so that the air or vapor will not be obstructed.

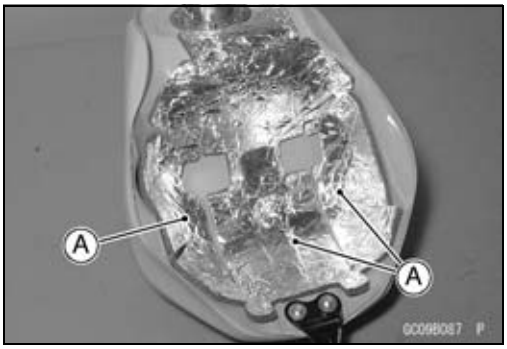

Fuel Tank

- Connect the fuel pump lead connector [A].
- Insert the fuel hose joint [B] straight onto the delivery pipe until the hose joint clicks.
- Push and pull [C] the hose joint [B] back and forth, and make sure it is locked and does not come off. When the hose joint is correctly installed, it should slide on the delivery pipe about 5 mm (0.2 in.).

★If it does not slide, reinstall the hose joint.

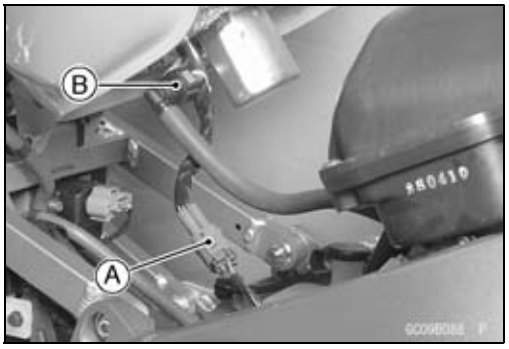

⚠ WARNING

Make sure the hose joint is installed correctly on the delivery pipe by sliding the joint, or the fuel could leak.

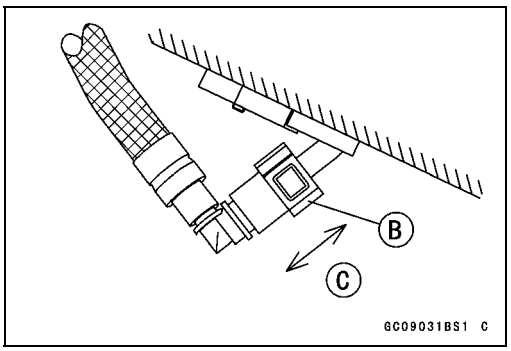

Fuel Tank Inspection

- Remove the hose(s) from the fuel tank, and open the tank cap.
- Check to see if the water drain pipe [B] and fuel breather pipe [C] in the tank are not clogged. Check the tank cap breather also.

★If they are clogged, remove the tank and drain it, and then blow the breather free with compressed air.

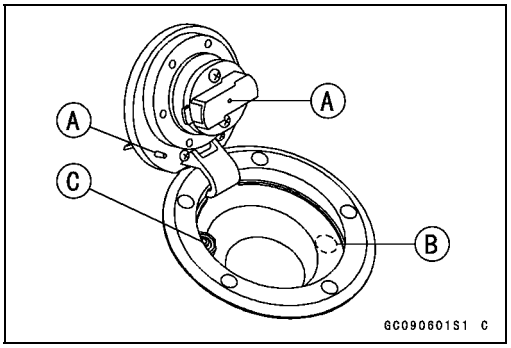

CAUTION

Do not apply compressed air to the air vent holes [A] in the tank cap. This could cause damage and clogging of the labyrinth in the cap.

Fuel Tank Cleaning

⚠ WARNING

Clean the tank in a well-ventilated area, and take care that there are no sparks or flame anywhere near the working area. Because of the danger or highly flammable liquids, do not use gasoline or low flash point solvents to clean the tank.

- Remove the fuel tank (see Fuel Tank Removal).
- Drain the fuel.
- Remove the fuel pump assy.
- Pour some high flash-point solvent into the fuel tank and shake the tank to remove dirt and fuel deposits.
- Pour the solvent over of the tank.
- Dry the tank with compressed air.
- Install the fuel pump assy (see Fuel Pump Installation).
- Install the fuel tank (see Fuel Tank Installation).

Evaporative Emission Control System

The Evaporative Emission Control System routes fuel vapors from the fuel system into the running engine or stores the vapors in a canister when the engine is stopped. Although no adjustments are required, a thorough visual inspection must be made at the intervals specified by the Periodic Maintenance Chart.

Parts Removal/Installation

⚠ WARNING

Gasoline is extremely flammable and can be explosive under certain conditions. Turn the ignition switch OFF. Do not smoke. Make sure the area is well-ventilated and free from any source of flame or sparks; this includes any appliance with a pilot light.

CAUTION

If gasoline, solvent, water or any other liquid enters the canister, the canister's vapor absorbing capacity is greatly reduced. If the canister does become contaminated, replace it with a new one.

- To prevent the gasoline from flowing into or out of the canister, hold the separator perpendicular to the ground.
- Connect the hoses according to the diagram of the system. Make sure they do not get pinched or kinked.

Hose Inspection

- Refer to the Evaporative Emission Control System Inspection in the Periodic Maintenance chapter.

Separator Inspection

- Refer to the Evaporative Emission Control System Inspection in the Periodic Maintenance chapter.
  [A] Separator

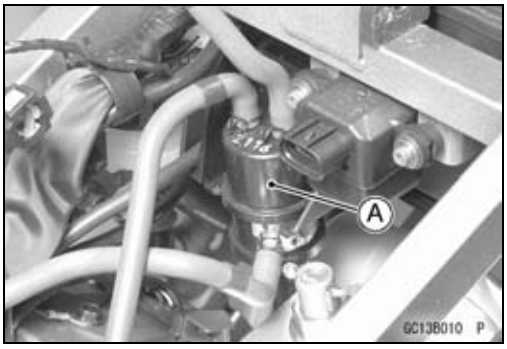

Evaporative Emission Control System

Separator Operation Test

⚠ WARNING

Gasoline is extremely flammable and can be explosive under certain conditions. Turn the ignition switch OFF. Do not smoke. Make sure the area is well-ventilated and free from any source of flame or sparks; this includes any appliance with a pilot light.

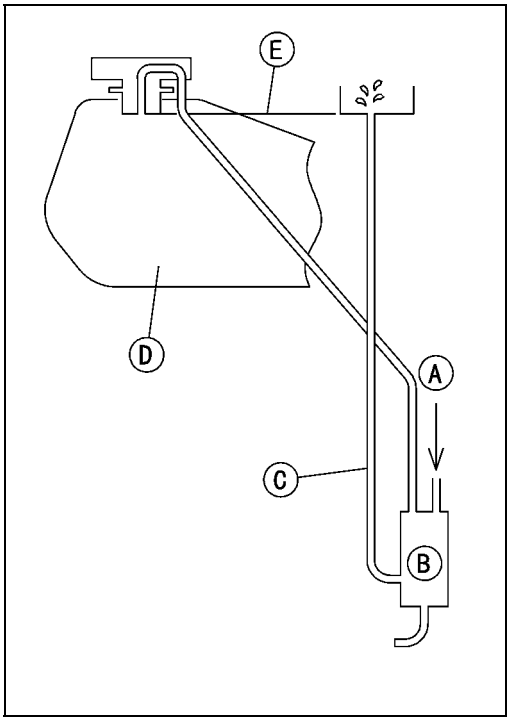

- Connect the hoses to the separator, and install the separator on the motorcycle.
- Disconnect the breather hose from the separator, and inject about 20 mL of gasoline [A] into the separator [B] through the hose fitting.
- Disconnect the fuel return hose [C] from the fuel tank [D].
- Run the open end of the return hose into the container and hold it level with the tank top [E].
- Start the engine, and let it idle.

★If the gasoline in the separator comes out of the hose, the separator works well. If it does not, replace the separator with a new one.

Canister Inspection (California Model Only)

- Refer to the Evaporative Emission Control System Inspection in the Periodic Maintenance chapter.

NOTE

○*The canister [A] is designed to work well through the motorcycle's life without any maintenance if it is used under normal conditions.*

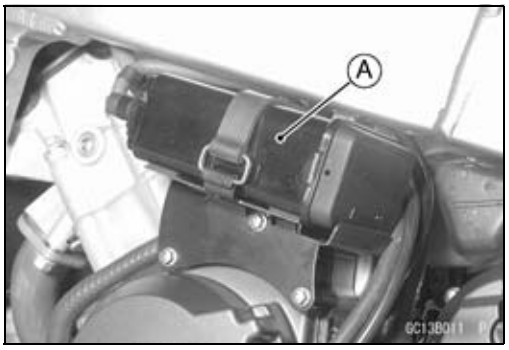

Cooling System

Table of Contents

Exploded View 4-2
Specifications 4-4
Special Tool 4-5
Coolant Flow Chart 4-6
Coolant 4-8
- Coolant Deterioration Inspection 4-8
- Coolant Level Inspection 4-8
- Coolant Draining 4-8
- Coolant Filling 4-8
- Pressure Testing 4-9
- Cooling System Flushing 4-9
- Coolant Filter Cleaning 4-9
- Coolant Reserve Tank Removal 4-10
- Coolant Reserve Tank Installation 4-10

Water Pump 4-11
- Water Pump Removal 4-11
- Water Pump Installation 4-11
- Water Pump Impeller Disassembly/Assembly 4-11
- Water Pump Inspection 4-11
- Water Pump Housing Disassembly 4-11
- Water Pump Housing Assembly 4-12
- Mechanical Seal Inspection 4-12

Radiator, Radiator Fan 4-13
- Radiator and Radiator Fan Removal 4-13
- Radiator and Radiator Fan Installation 4-14
- Radiator Inspection 4-14
- Radiator Cap Inspection 4-14
- Radiator Filler Neck Inspection 4-15

Thermostat 4-16
- Thermostat Removal 4-16
- Thermostat Installation 4-16
- Thermostat Inspection 4-16

Hose and Pipes 4-17
- Hose Installation 4-17
- Hose Inspection 4-17

Radiator Fan Switch, Water Temperature Sensor 4-18
- Radiator Fan Switch, Water Temperature Sensor Removal 4-18
- Radiator Fan Switch, Water Temperature Sensor Installation 4-18
- Radiator Fan Switch, Water Temperature Sensor Inspection 4-18

Exploded View

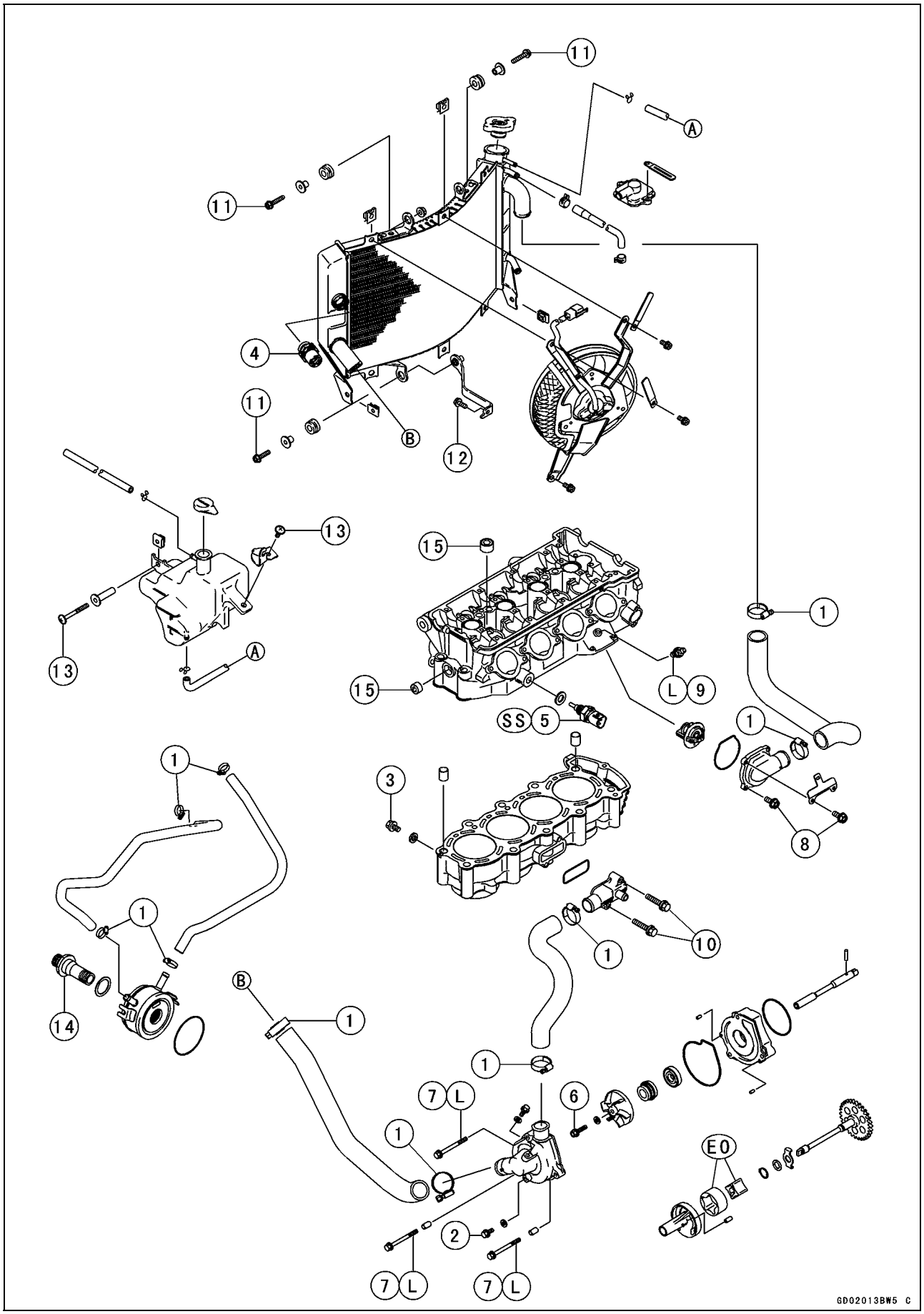

Exploded View

No.	Fastener	Torque			Remarks
		N·m	kgf·m	ft·lb	
1	Water hose clamp screws	2.0	0.20	17 in·lb	
2	Coolant drain plug (water pump)	8.8	0.90	78 in·lb	
3	Coolant drain plug (cylinder)	8.8	0.90	78 in·lb	
4	Radiator fan switch	18	1.8	13	
5	Water temperature sensor	25	2.5	18	SS
6	Water pump impeller bolt	9.8	1.0	87 in·lb	
7	Water pump cover bolts	12	1.2	104 in·lb	L
8	Thermostat housing cover bolts	5.9	0.60	52 in·lb	
9	Coolant by-pass fitting	8.8	0.90	78 in·lb	L
10	Water hose fitting bolts	12	1.2	106 in·lb	
11	Radiator mounting bolts	6.9	0.70	61 in·lb	
12	Radiator bracket mounting bolts	6.9	0.70	61 in·lb	
13	Coolant reserve tank mounting screws	6.9	0.70	61 in·lb	
14	Oil cooler bolt	78	8.0	58	
15	Water passage plugs	20	2.0	14	

L: Apply a non-permanent locking agent.
EO: Apply engine oil.
SS: Apply silicone sealant (Kawasaki Bond: 56019–120).

4-4 COOLING SYSTEM

Specifications

Item	Standard
Coolant provided when shipping:	
Type	Permanent type of antifreeze (soft water and ethylene glycol plus corrosion and rust inhibitor chemicals for aluminum engines and radiators)
Color	Green
Mixed ratio	Soft water 50%, coolant 50%
Freezing point	-35°C (-31°F)
Total amount	2.4 L (2.5 US qt.) (reserve tank full level including radiator and engine)
Radiator cap	
Relief pressure:	93 ~ 123 kPa (0.95 ~ 1.25 kgf/cm², 14 ~ 18 psi)
Thermostat:	
Valve opening temperature	58 ~ 62°C (136 ~ 144 °F)
Valve full opening lift	8 mm (0.3 in.) or more @75°C (167 °F)

Special Tool

Kawasaki Bond (Silicone Sealant) :
56019–120

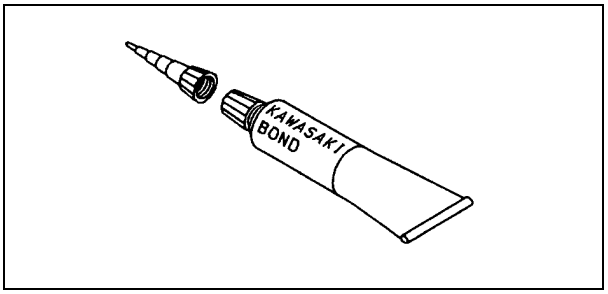

Coolant Flow Chart

Permanent type antifreeze is used as a coolant to protect the cooling system from rust and corrosion. When the engine starts, the water pump turns and the coolant circulates.

The thermostat is a wax pellet type which opens or closes with coolant temperature changes. The thermostat continuously changes its valve opening to keep the coolant temperature at the proper level. When coolant temperature is below 58 ~ 62°C (136 ~ 144°F), the thermostat closes so that the coolant flow is restricted through the air bleeder hole, causing the engine to warm up more quickly. When coolant temperature is more than 58 ~ 62°C (136 ~ 144°F), the thermostat opens and the coolant flows.

When the coolant temperature goes up beyond 92 ~ 104°C (198 ~ 219°F), the radiator fan switch conducts to operate the radiator fan. The radiator fan draws air through the radiator core when there is not sufficient air flow such as at low speeds. This increases up the cooling action of the radiator. When the temperature goes down from the operation temperature by 3 ~ 8°C (37 ~ 46°F), the fan switch opens and the radiator fan stops.

In this way, this system controls the engine temperature within narrow limits where the engine operates most efficiently even if the engine load varies.

The system is pressurized by the radiator cap to suppress boiling and the resultant air bubbles which can cause engine overheating. As the engine warms up, the coolant in the radiator and the water jacket expands. The excess coolant flows through the radiator cap and hose to the reserve tank to be stored there temporarily. Conversely, as the engine cools down, the coolant in the radiator and the water jacket contracts, and the stored coolant flows back to the radiator from the reserve tank.

The radiator cap has two valves. One is a pressure valve which holds the pressure in the system when the engine is running. When the pressure exceeds 93 ~ 123 kPa (0.95 ~ 1.25 kgf/cm², 14 ~ 18 psi), the pressure valve opens and releases the pressure to the reserve tank. As soon as pressure escapes, the valve closes, and keeps the pressure at 93 ~ 123 kPa (0.95 ~ 1.25 kgf/cm², 14 ~ 18 psi). When the engine cools down, another small valve (vacuum valve) in the cap opens. As the coolant cools, the coolant contracts to form a vacuum in the system. The vacuum valve opens and allows the coolant from the reserve tank to enter the radiator.

Coolant Flow Chart

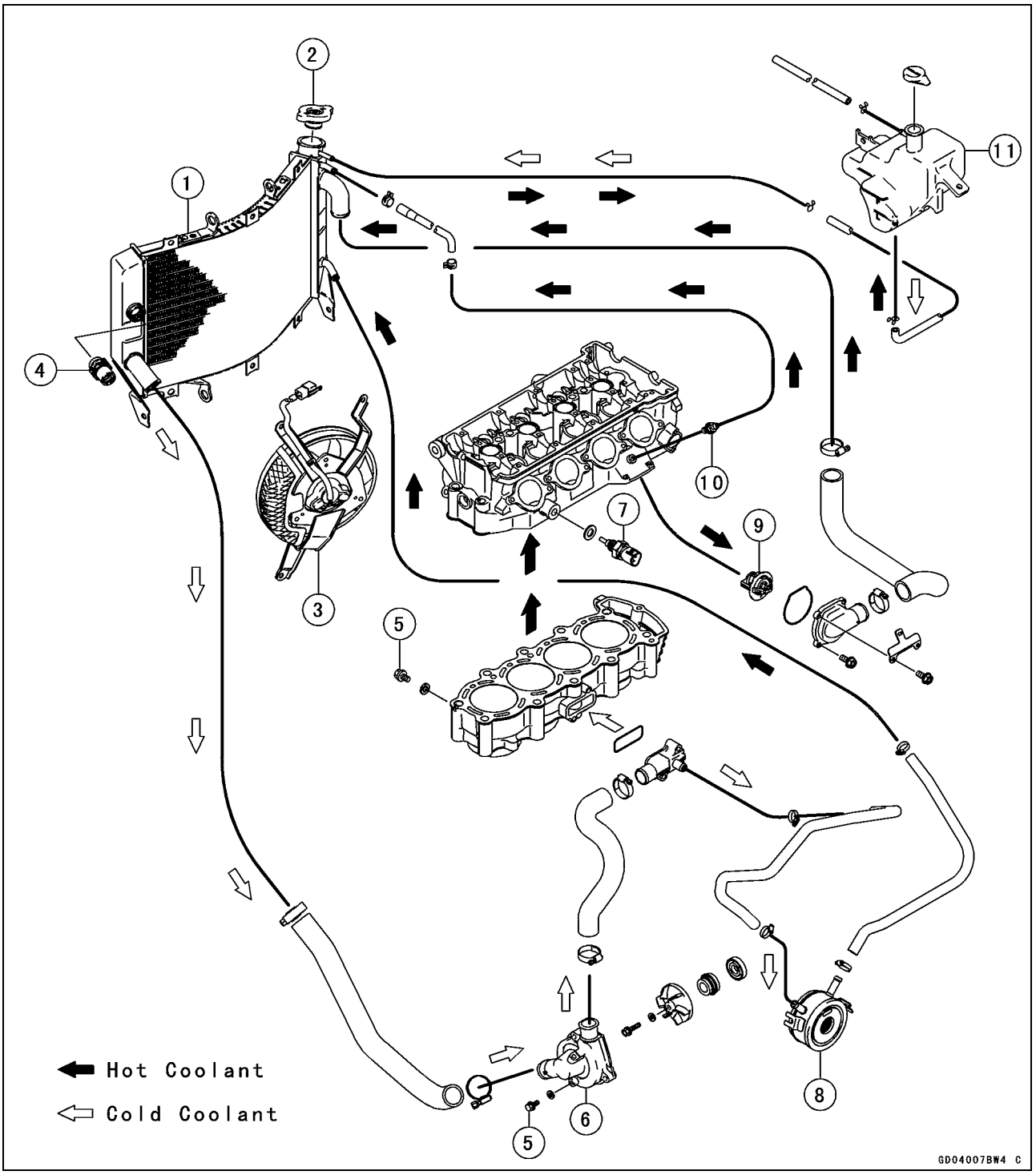

1. Radiator
2. Radiator Cap
3. Radiator Fan
4. Fan Switch
5. Drain Plugs
6. Water Pump
7. Water Temperature Sensor
8. Oil Cooler
9. Thermostat
   When the engine is cold, the thermostat is closed so that the coolant flow is restricted through the air bleeder hole, causing the engine to warm up more quickly.
10. By-pass Fitting
    The fitting is installed to bleed the air.
11. Reserver Tank
    When the engine is very hot, the pressure valve in the radiator cap allows air and vapor to escape into the reserve tank. When the engine cools down, the pressure drop draws the vacuum valve (another small valve) open, admitting coolant from the reserve tank into the radiator.

Coolant

Coolant Deterioration Inspection

- Visually inspect the coolant in the reserve tank.

★If whitish cotton-like wafts are observed, aluminum parts in the cooling system are corroded. If the coolant is brown, iron or steel parts are rusting. In either case, flush the cooling system.

★If the coolant gives off an abnormal smell, check for a cooling system leak. It may be caused by exhaust gas leaking into the cooling system.

Coolant Level Inspection

NOTE

○*Check the level when the engine is cold (room or ambient temperature).*

- Check the coolant level in the reserve tank with the motorcycle held perpendicular.

★If the coolant level is lower than the low level line [A], add coolant to the full level line [B].

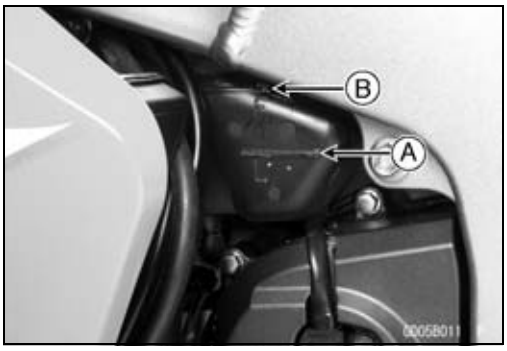

CAUTION

For refilling, add the specified mixture of coolant and soft water. Adding water alone dilutes the coolant and degrades its anticorrosion properties. The diluted coolant can attack the aluminum engine parts. In an emergency, soft water alone can be added. But the diluted coolant must be returned to the correct mixture ratio within a few days.
If coolant must be added often, or the reservoir tank has run completely dry, there is probably leakage in the cooling system. Check the system for leaks.

Coolant Draining

- Refer to the Cooling System in the Periodic Maintenance chapter.

Coolant Filling

- Refer to the Cooling System in the Periodic Maintenance chapter.

Coolant

Pressure Testing

- Remove:
  Right Inner Cover (see Frame chapter)
- Remove the radiator cap, and install a cooling system pressure tester [A] on the filler neck.

NOTE

○*Wet the cap sealing surfaces with water or coolant to prevent pressure leaks.*

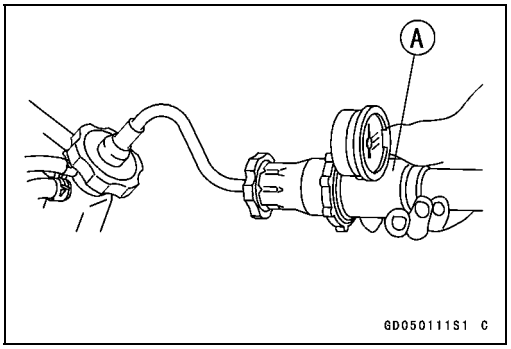

- Build up pressure in the system carefully until the pressure reaches 123 kPa (1.25 kgf/cm², 18 psi).

CAUTION

During pressure testing, do not exceed the pressure for which the system is designed. The maximum pressure is 123 kPa (1.25 kgf/cm², 18 psi).

- Watch the gauge for at least 6 seconds.

★If the pressure holds steady, the system is all right.

★If the pressure drops and no external source is found, check for internal leaks. Droplets in the engine oil indicate internal leakage. Check the cylinder head gasket and the water pump.

- Remove the pressure tester, replenish the coolant, and install the radiator cap.

Cooling System Flushing

Over a period of time, the cooling system accumulates rust, scale, and lime in the water jacket and radiator. When this accumulation is suspected or observed, flush the cooling system. If this accumulation is not removed, it will clog up the water passage and considerable reduce the efficiency of the cooling system.

- Drain the cooling system (see Cooling System in the Periodic Maintenance chapter).
- Fill the cooling system with fresh water mixed with a flushing compound.

CAUTION

Do not use a flushing compound which is harmful to the aluminum engine and radiator. Carefully follow the instructions supplied by the manufacturer of the cleaning product.

- Warm up the engine, and run it at normal operating temperature for about ten minutes.
- Stop the engine, and drain the cooling system.
- Fill the system with fresh water.
- Warm up the engine and drain the system.
- Repeat the previous two steps once more.
- Fill the system with a permanent type coolant and bleed the air from the system (see Cooling System in the Periodic Maintenance chapter).

Coolant Filter Cleaning

- Refer to the Fuel System in the Periodic Maintenance chapter.

Coolant

Coolant Reserve Tank Removal

- Remove:
  Coolant Reserve Tank Mounting Screws [A]

- Remove:
  Coolant Reserve Tank Mounting Screws [A]
  Collar
  Idle Adjuster Bracket [B]
  Coolant Reserve Tank [C]

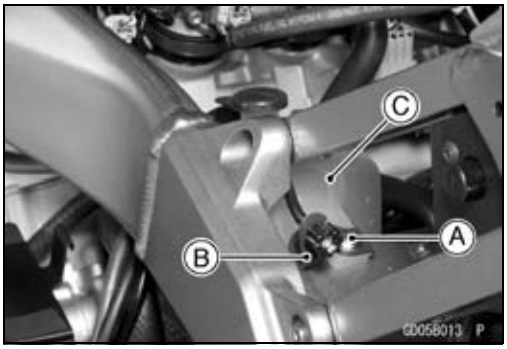

Coolant Reserve Tank Installation

- Install:
  Coolant Reserve Tank [A]
  Collar [B]
  Idle Adjuster Bracket [C]
- Tighten:

Torque - Coolant Reserve Tank Mounting Screws [D]: 6.9 N·m (0.70 kgf·m, 61 in·lb)

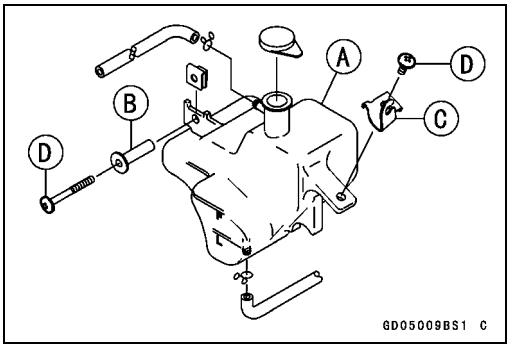

Water Pump

Water Pump Removal

- Refer to the Oil Pump Removal in Engine Lubrication System chapter.

Water Pump Installation

- Refer to the Oil Pump Installation in Engine Lubrication System chapter.

Water Pump Impeller Disassembly/Assembly

- The sealing seat and rubber seal may be removed easily by hand.
- Apply coolant around the surfaces of the rubber seal and sealing seat.
- Install the rubber seal [A] and sealing seat [B] into the impeller by pressing them by hand until the seat stops at the bottom of the hole.
- Tighten the water pump impeller bolt by special torque.

Torque - Water Pump Impeller Bolt: 10 N·m (1.0 kgf·m, 87 in·lb)

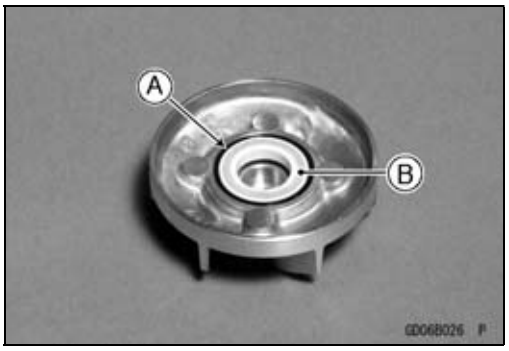

Water Pump Inspection

- Check the drainage outlet passage [A] at the bottom of the water pump body for coolant leaks.

★If the mechanical seal is damaged, the coolant leaks through the seal and drains through the passage. Replace the water pump unit.

- Visually inspect the impeller [A].

★If the surface is corroded, or if the blades are damaged, replace the impeller.

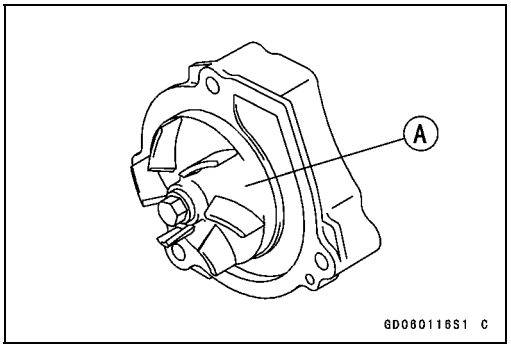

Water Pump Housing Disassembly

CAUTION
Do not damage the hole wall of the water pump housing.

- Insert a bar [A] into the pump housing [B], and hammer evenly around the circumference of the mechanical seal bottom [C].

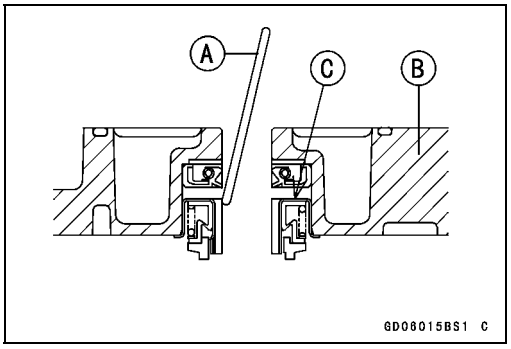

- Take the oil seal [A] out of the housing [B] with a hook [C].

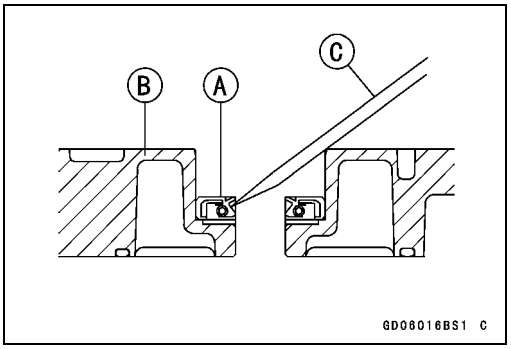

Water Pump Housing Assembly

CAUTION
Do not reuse the mechanical seal and oil seal.

- Apply high temperature grease to the oil seal lips [A].
- Press the new oil seal into the housing with a bearing driver [B] until it stops at the bottom surface [C] of the housing.

  Special Tool - Bearing Driver Set: 57001-1129

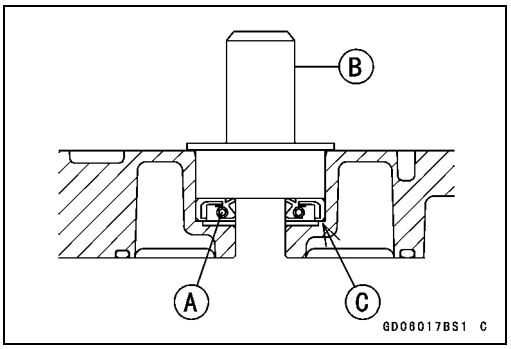

CAUTION
Be careful not to damage the sealing surface of the mechanical seal.

- Press the new mechanical seal into the housing with stem bearing driver [A] until its flange [B] touches the surface [C] of the housing.

  Special Tool - Bearing Driver: 57001–382

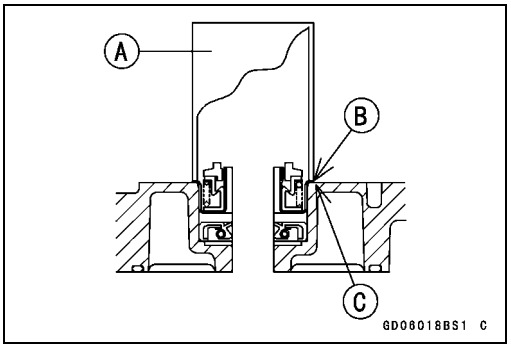

Mechanical Seal Inspection

- Visually inspect the mechanical seal.

★If any one of the parts is damaged, replace the mechanical seal as a unit.

[A] Impeller Sealing Seat Surface
[B] Rubber Seal
[C] Mechanical Seal

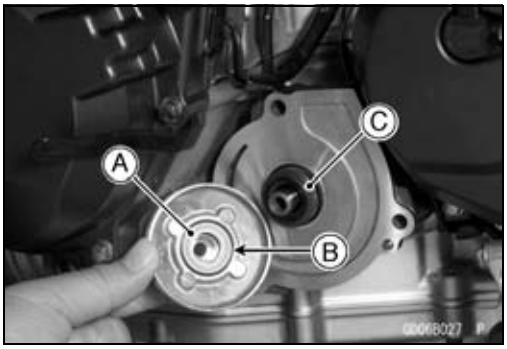

Radiator, Radiator Fan

Radiator and Radiator Fan Removal

⚠ WARNING

The radiator fan is connected directly to the battery. The radiator fan may start even if the ignition switch is off. NEVER TOUCH THE RADIATOR FAN UNTIL THE RADIATOR FAN CONNECTOR IS DISCONNECTED. TOUCHING THE FAN BEFORE THE CONNECTOR IS DISCONNECTED COULD CAUSE INJURY FROM THE FAN BLADES.

- Remove:
  Lower Fairings (see Frame chapter)
  Coolant (see Cooling System in the Periodic Maintenance chapter)
  Radiator Hoses [A]
  Radiator Mounting Bolt [B]

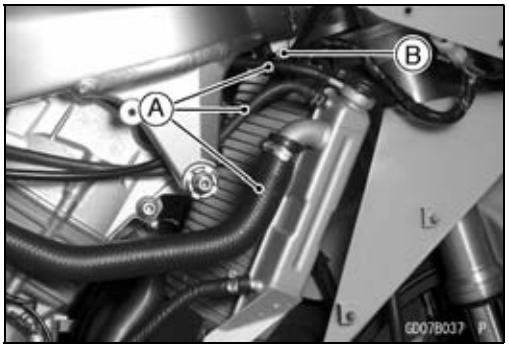

- Remove:
  Fan Switch Lead Connector [A]
  Radiator Hose [B]

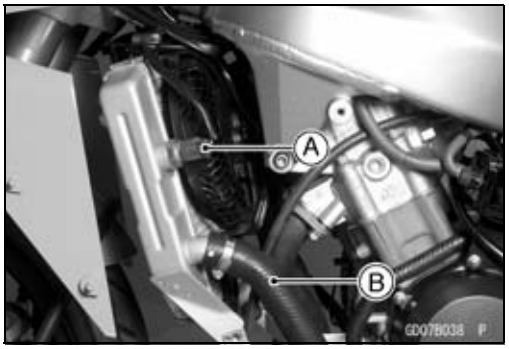

- Remove:
  Radiator Mounting Bolts [A]
  Radiator Fan Lead Connector
  Radiator [B]

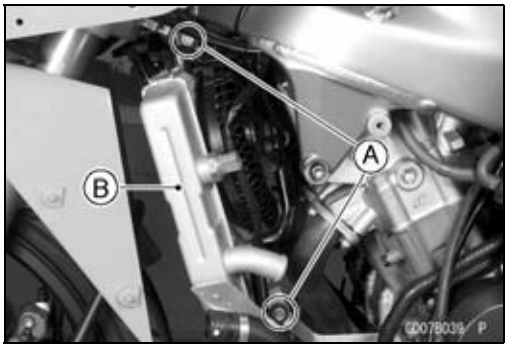

- Remove:
  Radiator Fan Mounting Bolts [A]
  Radiator Fan [B]

CAUTION

Do not touch the radiator core. This could damage the radiator fins, resulting in loss of cooling efficiency.

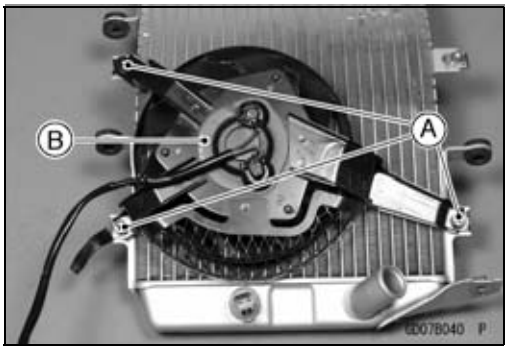

Radiator, Radiator Fan

Radiator and Radiator Fan Installation

- Install:
  Radiator [A]
  Dampers [B] (note the direction)
  Collars [C]
  Horn [D]
  Bracket [E]
- Tighten:

Torque - Radiator Bracket Mounting Bolts (L= 16 mm) [F]: 6.9 N·m (0.70 kgf·m, 61 in·lb)
Radiator Mounting Bolts (L= 30 mm) [G]: 6.9 N·m (0.70 kgf·m, 61 in·lb)
Radiator Mounting Bolts (L= 25 mm) [H]: 6.9 N·m (0.70 kgf·m, 61 in·lb)

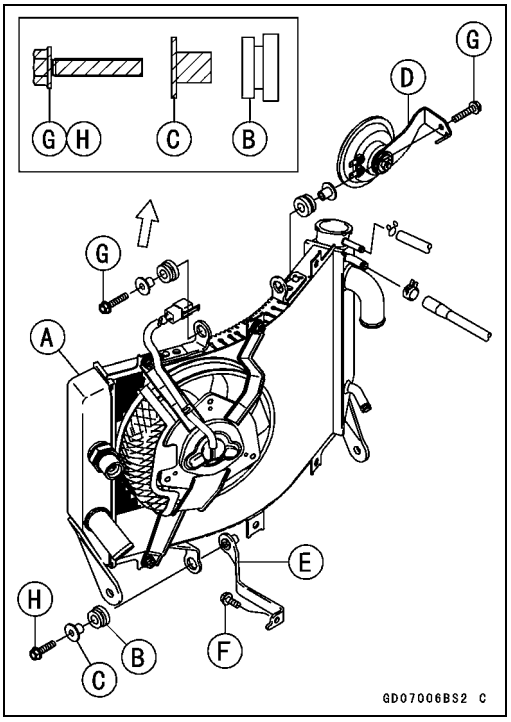

Radiator Inspection

- Check the radiator core.

★If there are obstructions to air flow, remove them.
★If the corrugated fins [A] are deformed, carefully straighten them.
★If the air passages of the radiator core are blocked more than 20% by unremovable obstructions or irreparably deformed fins, replace the radiator with a new one.

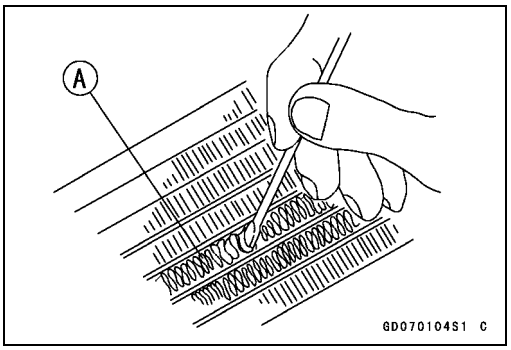

CAUTION

When cleaning the radiator with steam cleaner, be careful of the following to prevent radiator damage.
Keep the steam gun [A] away more than 0.5 m (1.6 ft) [B] from the radiator core.
Hold the steam gun perpendicular [C] (not oblique [D]) to the core surface.
Run the steam gun following the core fin direction.

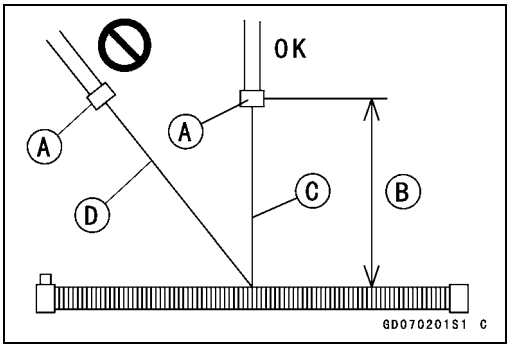

Radiator Cap Inspection

- Check the condition of the bottom [A] and top [B] valve seals and valve spring [C].

★If any one of them shows visible damage, replace the cap with a new one.

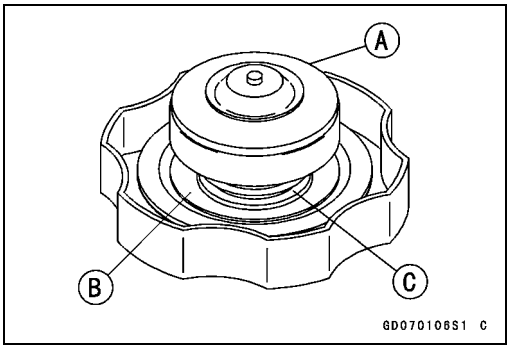

Radiator, Radiator Fan

- Install the cap [A] on a cooling system pressure tester [B].

NOTE

○*Wet the cap sealing surfaces with water or coolant to prevent pressure leaks.*

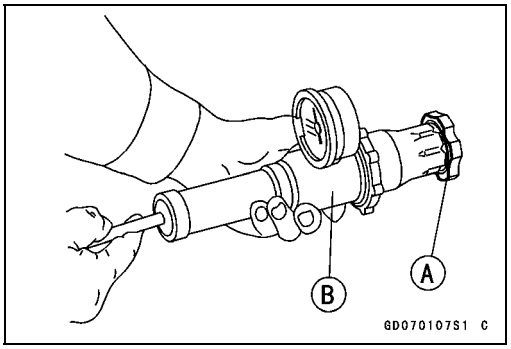

- Watching the pressure gauge, pump the pressure tester to build up the pressure until the relief valve opens: the gauge hand flicks downward. Stop pumping and measure leak time at once. The relief valve must open within the specified range in the table below and the gauge hand must remain within the same range at least 6 seconds.

Radiator Cap Relief Pressure

Standard: **93 ~ 123 kPa (0.95 ~ 1.25 kgf/cm², 14 ~ 18 psi)**

★If the cap cannot hold the specified pressure, or if it holds too much pressure, replace it with a new one.

Radiator Filler Neck Inspection

- Remove the right inner cover (see Frame chapter).
- Remove the radiator cap.
- Check the radiator filler neck for signs of damage.
- Check the condition of the top and bottom sealing seats [A] in the filler neck. They must be smooth and clean for the radiator cap to function properly.

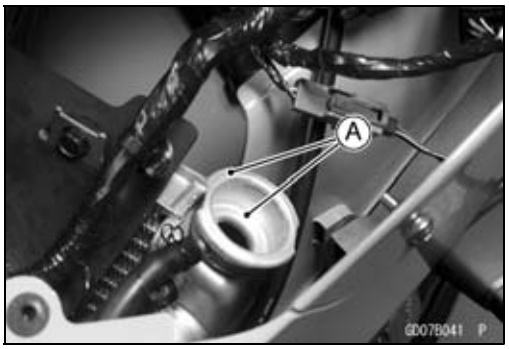

Thermostat

Thermostat Removal

- Remove:
  Coolant (see Cooling System in the Periodic Maintenance chapter)
  Seats (see Frame chapter)
  Fuel Tank (see Fuel System chapter)
  Thermostat Housing Cover Bolts [A]
  Bracket [B]
  Thermostat Housing Cover [C]
  Thermostat

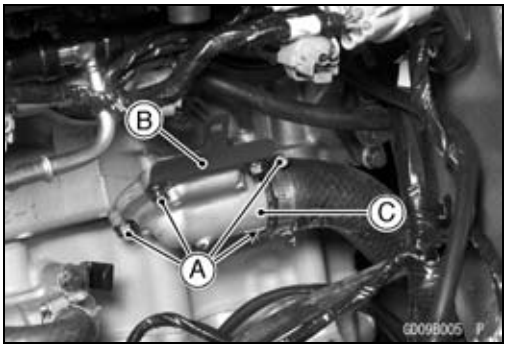

Thermostat Installation

- Be sure to install the O-ring [A] on the housing cover.
- Tighten the housing cover bolts.

  Torque - Thermostat Housing Cover Bolts: 5.9 N·m (0.60 kgf·m, 52 in·lb)

- Fill the radiator with coolant.

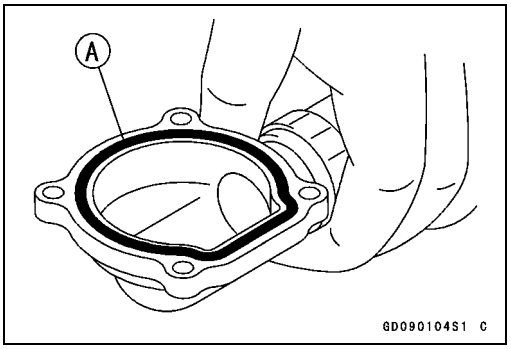

Thermostat Inspection

- Remove the thermostat, and inspect the thermostat valve [A] at room temperature.

★If the valve is open, replace the thermostat with a new one.

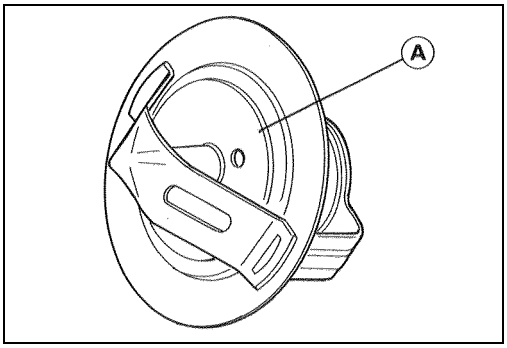

- To check valve opening temperature, suspend the thermostat [A] in a container of water and raise the temperature of the water.

○The thermostat must be completely submerged and must not touch the container sides or bottom. Suspend an accurate thermometer [B] in the water so that the heat sensitive portions [C] are located in almost the same depth. It must not touch the container, either.

★If the measurement is out of the specified range, replace the thermostat with a new one.

Thermostat Valve Opening Temperature
58 ~ 62°C (136 ~ 144°F)

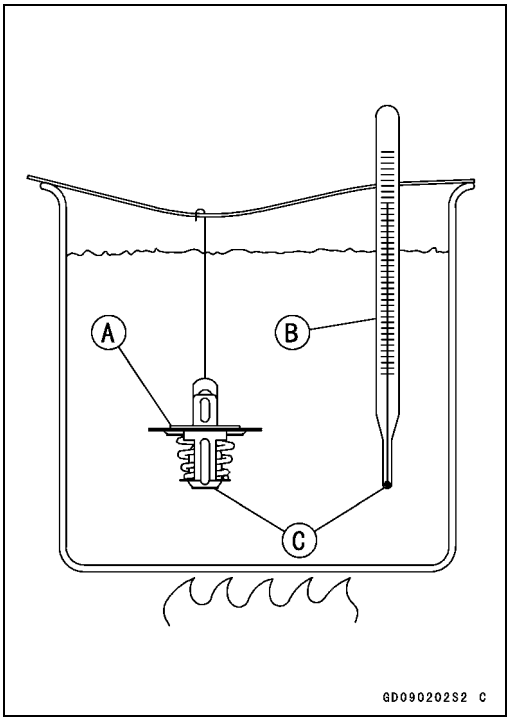

Hose and Pipes

Hose Installation

- Install the hoses and pipes being careful to follow bending direction or diameter. Avoid sharp bending, kinking, flattening, or twisting.
- Install the clamps [A] as near as possible to the hose end to clear the raised rib or the fitting. This will prevent the hoses from working loose.

○The clamp screws should be positioned correctly to prevent the clamps from contacting anything.

Torque - Hose Clamp Screws: 2.0 N·m (0.20 kgf·m, 17 in·lb)

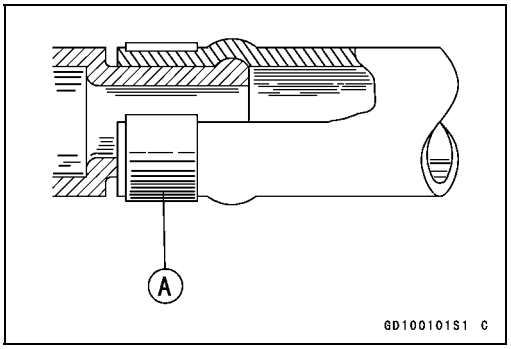

Hose Inspection

○Refer to the Cooling System in the Periodic Maintenance chapter

Radiator Fan Switch, Water Temperature Sensor

Radiator Fan Switch, Water Temperature Sensor Removal

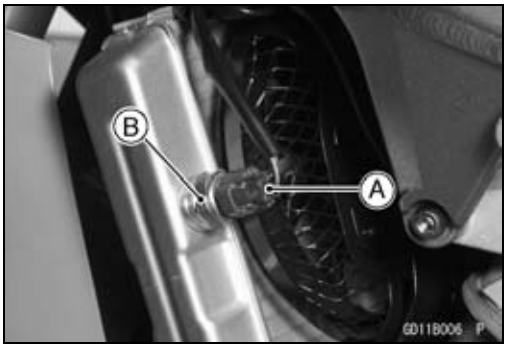

CAUTION

The fan switch or the water temperature sensor should never be allowed to fall on a hard surface. Such a shock to their parts can damage them.

- Drain the coolant (see Cooling System in the Periodic Maintenance chapter).
- Remove:
  Radiator Fan Switch Lead Connector [A]
  Radiator Fan Switch [B]

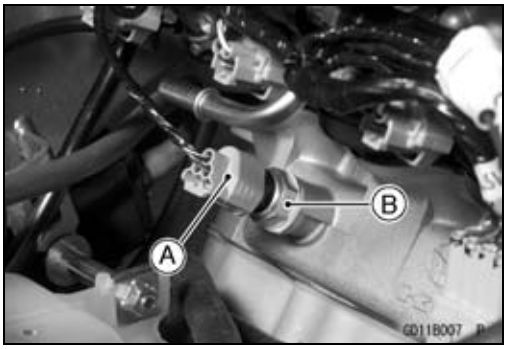

- Remove:
  Seats (see Frame chapter)
  Fuel Tank (see Fuel System chapter)
  Water Temperature Sensor Lead Connector [A]
  Water Temperature Sensor [B]

Radiator Fan Switch, Water Temperature Sensor Installation

- Apply silicone sealant to the threads of the water temperature sensor.

  Sealant - Kawasaki Bond (Silicone Sealant): 56019-120

- Tighten the fan switch and water temperature sensor.

  Torque - Radiator Fan Switch : 18 N·m (1.8 kgf·m, 13 ft·lb)
  Water Temperature Sensor : 25 N·m (2.5 kgf·m, 18 ft·lb)

- Fill the coolant and bleed the air from cooling system (see Cooling System in the Periodic Maintenance chapter).

Radiator Fan Switch, Water Temperature Sensor Inspection

- Refer to the Electrical System chapter for these inspections.

Engine Top End

Table of Contents

Exploded View 5-2
Specifications 5-6
Special Tools and Sealant 5-8
Clean Air System 5-10
Air Suction Valve Removal 5-10
Air Suction Valve Installation 5-10
Air Suction Valve Inspection 5-10
Vacuum Switch Valve Removal ... 5-10
Vacuum Switch Valve Installation 5-10
Vacuum Switch Valve Test 5-11
Clean Air System Hose Inspection 5-11
Cylinder Head Cover 5-12
Cylinder Head Cover Removal 5-12
Cylinder Head Cover Installation . 5-12
Camshaft Chain Tensioner 5-14
Camshaft Chain Tensioner Removal 5-14
Camshaft Chain Tensioner Installation 5-14
Camshaft, Camshaft Chain 5-15
Camshaft Removal 5-15
Camshaft Installation 5-15
Camshaft, Camshaft Cap Wear ... 5-17
Camshaft Runout 5-17
Cam Wear 5-17
Camshaft Chain Removal 5-18
Camshaft and Sprocket Assembly 5-18
Cylinder Head 5-19
Cylinder Compression Measurement 5-19
Cylinder Head Removal 5-20
Cylinder Head Installation 5-21
Cylinder Head Warp 5-21
Valves 5-22
Valve Clearance Inspection 5-22
Valve Clearance Adjustment 5-22
Valve Removal 5-22
Valve Installation 5-22
Valve Guide Removal 5-22
Valve Guide Installation 5-23
Valve-to-Guide Clearance Measurement (Wobble Method) 5-23
Valve Seat Inspection 5-24
Valve Seat Repair 5-24
Cylinder, Pistons 5-29
Cylinder Removal 5-29
Cylinder Installation 5-29
Piston Removal 5-29
Piston Installation 5-30
Cylinder Wear 5-31
Piston Wear 5-31
Piston Ring, Piston Ring Groove Wear 5-32
Piston Ring Groove Width 5-32
Piston Ring Thickness 5-33
Piston Ring End Gap 5-33
Throttle Valve Holder 5-34
Throttle Valve Holder Installation . 5-34
Muffler 5-35
Exhaust Pipe Manifold Removal .. 5-35
Exhaust Pipe Manifold Installation 5-35
Muffler Body Removal 5-35
Muffler Body Installation 5-35

Exploded View

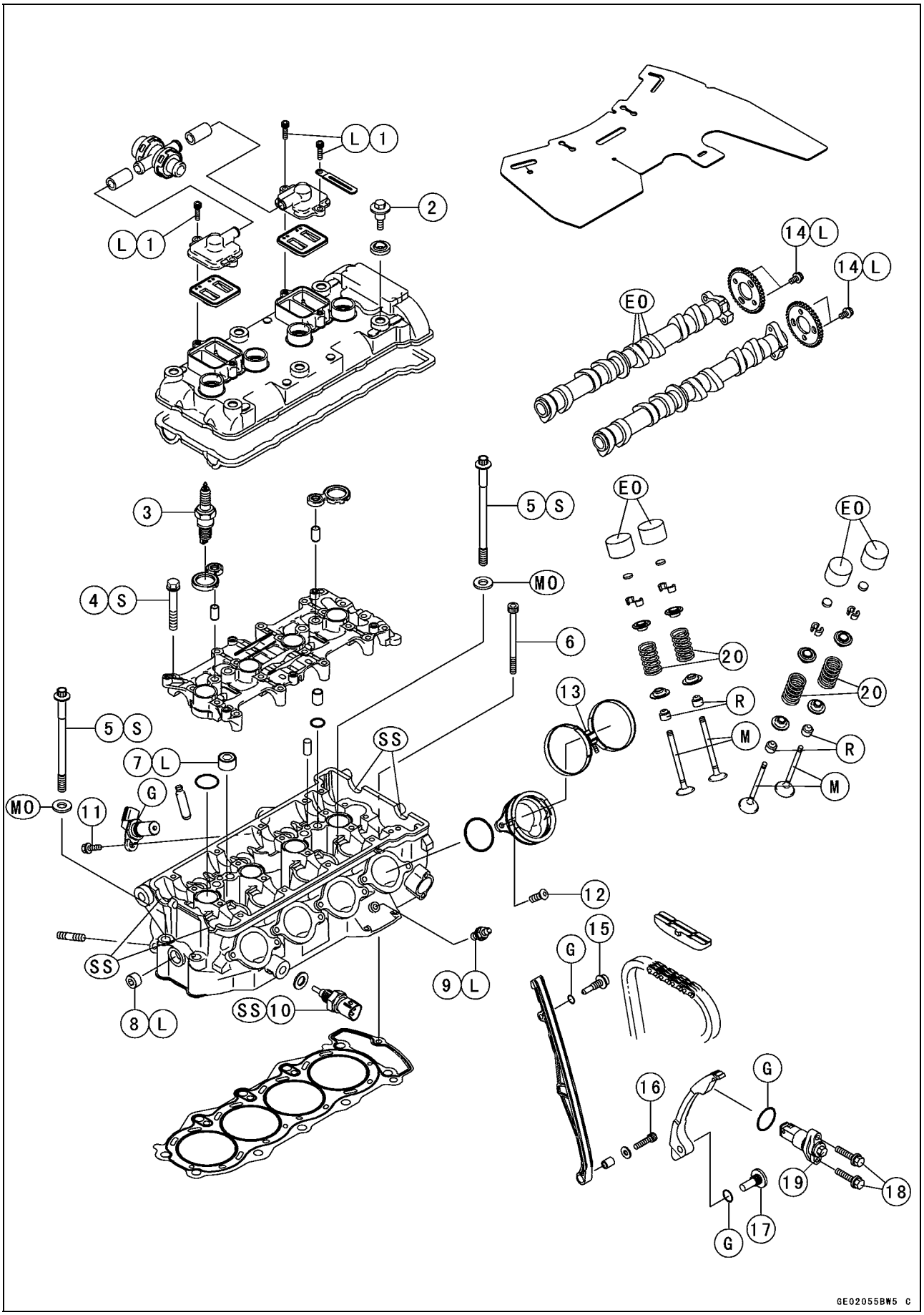

Exploded View

No.	Fastener	Torque			Remarks
		N·m	kgf·m	ft·lb	
1	Air suction valve cover bolts	12	1.2	104 in·lb	L
2	Cylinder head cover bolts	9.8	1.0	87 in·lb	
3	Spark plugs	13	1.3	113 in·lb	
4	Camshaft cap bolts	12	1.2	104 in·lb	S
5	Cylinder head bolts (9 mm)	40	4.1	30	
6	Cylinder head bolts (6 mm)	12	1.2	104 in·lb	S
7	Cylinder head jacket plug (upper)	20	2.0	14.5	L
8	Cylinder head jacket plug (left)	20	2.0	14.5	L
9	Coolant by-pass fitting	8.8	0.90	78 in·lb	L
10	Water temperature sensor	25	2.5	18	SS
11	Camshaft position sensor bolt	12	1.2	104 in·lb	
12	Throttle body assembly holder bolts	12	1.2	104 in·lb	
13	Throttle body assembly holder clamp bolts	2.5	0.25	22 in·lb	
14	Camshaft sprocket bolts	15	1.5	11	L
15	Front camshaft chain guide bolt (upper)	25	2.5	18	
16	Front camshaft chain guide bolt (lower)	12	1.2	104 in·lb	
17	Rear camshaft chain guide bolt	25	2.5	18	
18	Camshaft chain tensioner mounting bolts	9.8	1.0	87 in·lb	
19	Camshaft chain tensioner cap bolt	29	3.0	21	

20. Closed coil end faces downward.
G: Apply grease.
L: Apply a non-permanent locking agent.
M: Apply molybdenum disulfide grease.
EO: Apply engine oil.
SS: Apply silicone sealant.
R: Replacement Parts
S: Follow the specific tightening sequence.

Exploded View

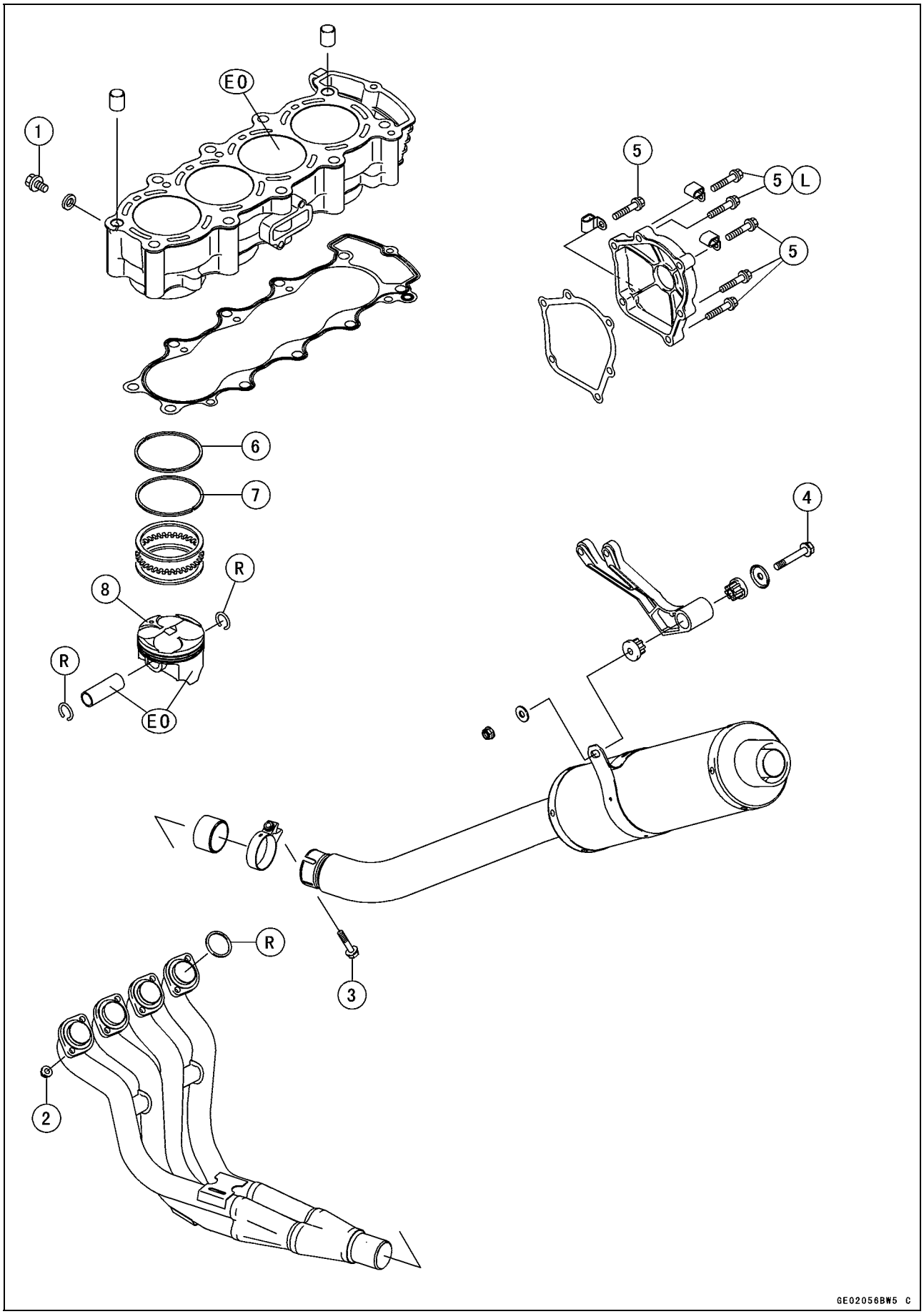

Exploded View

No.	Fastener	Torque			Remarks
		N·m	kgf·m	ft·lb	
1	Water jacket drain bolt	8.8	0.90	78 in·lb	
2	Exhaust pipe manifold nut	17	1.7	12	
3	Exhaust pipe clamp bolt	17	1.7	12	
4	Muffler body bolt	30	3.0	22	
5	Crankshaft sensor cover bolts	9.8	1.0	87 in·lb	L (1)

6. R marked side face up.
7. RN marked side face up.
8. A marking hollow facing forward.

L: Apply a non-permanent locking agent.
EO: Apply engine oil.
R: Replacement Parts

Exhaust System

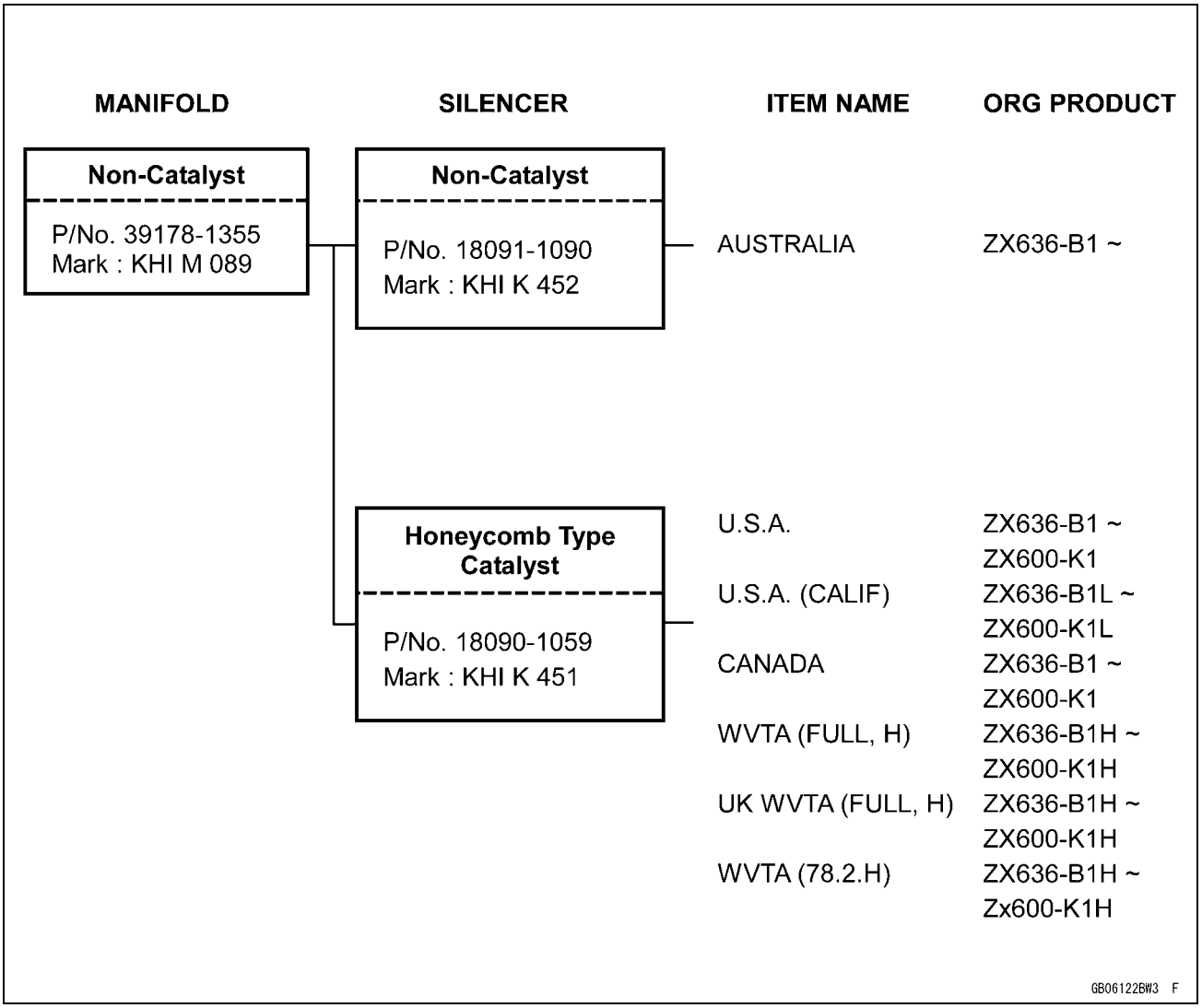

UK: United Kingdom Model
Full: Full Power
78.2: Horsepower 78.2 kW (106.3 ps)
H: Honeycomb Type Catalyst

Specifications

Item	Standard	Service Limit
Clean Air System:		
Vacuum switch valve closing pressure:	Open → Close 41 ~ 49 kPa (310 ~ 370 mmHg)	
Camshafts		
Cam height:		
Exhaust	33.146 ~ 33.254 mm (1.305 ~ 1.309 in.)	33.05 mm (1.30 in.)
Inlet	34.146 ~ 34.254 mm (1.344 ~ 1.349 in.)	34.05 mm (1.34 in.)
Camshaft journal, camshaft cap clearance	0.038 ~ 0.081 mm (0.001 ~ 0.003 in.)	0.17 mm (0.007 in.)
Camshaft journal diameter	23.940 ~ 23.962 mm (0.9425 ~ 0.9434 in.)	23.91 mm (0.941 in.)
Camshaft bearing inside diameter	24.000 ~ 24.021 mm (0.9449 ~ 0.9457 in.)	24.08 mm (0.948 in.)
Camshaft runout	TIR 0.02 mm (0.0008 in.) or less	TIR 0.1 mm (0.004 in.)
Cylinder Head:		
Cylinder compression	(usable range) 950 ~ 1 450 kPa (9.7 ~ 14.8 kgf/cm², 138 ~ 210 psi) @350 r/min (rpm)	– – –
Cylinder head warp	– – –	0.05 mm (0.002 in.)
Valves:		
Valve head thickness:		
Exhaust	1.0 mm (0.04 in.)	0.6 mm (0.02 in.)
Inlet	0.5 mm (0.02 in.)	0.25 mm (0.01 in.)
Valve stem bend	TIR 0.01 mm (0.0004 in.) or less	TIR 0.05 mm (0.002 in.)
Valve stem diameter:		
Exhaust	3.955 ~ 3.970 mm (0.1557 ~ 0.1563 in.)	3.94 mm (0.155 in.)
Inlet	3.975 ~ 3.990 mm (0.1565 ~ 0.1571 in.)	3.96 mm (0.156 in.)
Valve guide inside diameter		
Exhaust	4.000 ~ 4.012 mm (0.1575 ~ 0.1580 in.)	4.08 mm (0.161 in.)
Inlet	4.000 ~ 4.012 mm (0.1575 ~ 0.1580 in.)	4.08 mm (0.161 in.)
Valve/valve guide clearance (wobble method):		
Exhaust	0.10 ~ 0.18 mm (0.0039 ~ 0.0071 in.)	0.35 mm (0.014 in.)
Inlet	0.03 ~ 0.12 mm (0.0012 ~ 0.0047 in.)	0.29 mm (0.011 in.)
Valve seat cutting angle	45°, 32°, 60°	– – –
Valve seat surface:		
Width: Exhaust	0.5 ~ 1.0 mm (0.02 ~ 0.04 in.)	– – –
Inlet	0.5 ~ 1.0 mm (0.02 ~ 0.04 in.)	– – –
Outside diameter:		
Exhaust	22.1 ~ 22.3 mm (0.87 ~ 0.88 in.)	– – –
Inlet	26.4 ~ 26.6 mm (1.04 ~ 1.05 in.)	– – –
Valve spring free length:		
Exhaust	39.4 mm (1.55 in.)	38.0 mm (1.50 in.)
Inlet	35.3 mm (1.39 in.)	33.9 mm (1.33 in.)

Specifications

Item		Standard	Service Limit
Cylinder, Piston:			
Cylinder inside diameter			
	ZX636	68.000 ~ 68.012 mm (2.677 ~ 2.678 in.)	68.10 mm (2.68 in.)
	ZX600	67.000 ~ 67.012 mm (2.637 ~ 2.638 in.)	67.10 mm (2.64 in.)
Piston diameter	ZX636	67.975~ 67.990 mm (2.676 ~ 2.677 in.)	67.83 mm (2.67 in.)
	ZX600	66.975~ 66.990 mm (2.636 ~ 2.637 in.)	66.83 mm (2.63 in.)
Piston/cylinder clearance:		0.010 ~ 0.037 mm (0.0004 ~ 0.0015 in.)	– – –
Piston ring/groove clearance			
Top	ZX636	0.03 ~ 0.05 mm (0.0012 ~ 0.0020 in.)	0.15 mm (0.0059 in.)
	ZX600	0.05 ~ 0.09 mm (0.0020 ~ 0.0035 in.)	0.19 mm (0.0075 in.)
Second		0.03 ~ 0.07 mm (0.0012 ~ 0.0028 in.)	0.17 mm (0.0067 in.)
Piston ring groove width:			
Top	ZX636	0.82 ~ 0.84 mm (0.0322 ~ 0.0331 in.)	0.92 mm (0.036 in.)
	ZX600	0.84 ~ 0.86 mm (0.0331 ~ 0.0339 in.)	0.94 mm (0.037 in.)
Second		0.82 ~ 0.84 mm (0.0323 ~ 0.0331 in.)	0.92 mm (0.036 in.)
Piston ring thickness:			
Top		0.77 ~ 0.79 mm (0.0303 ~ 0.0311 in.)	0.70 mm (0.028 in.)
Second		0.77 ~ 0.79 mm (0.0303 ~ 0.0311 in.)	0.70 mm (0.028 in.)
Piston ring end gap:			
Top		0.12 ~ 0.22 mm (0.0047 ~ 0.0087 in.)	0.5 mm (0.020 in.)
Second		0.30 ~ 0.45 mm (0.0118 ~ 0.0177 in.)	0.8 mm (0.031 in.)

Special Tools and Sealant

Compression Gauge:
57001–221

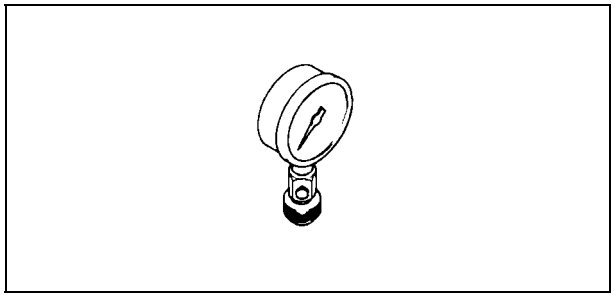

Valve Spring Compressor Assembly:
57001–241

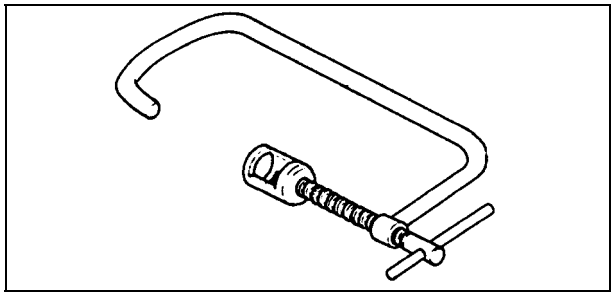

Piston Pin Puller Assembly:
57001–910

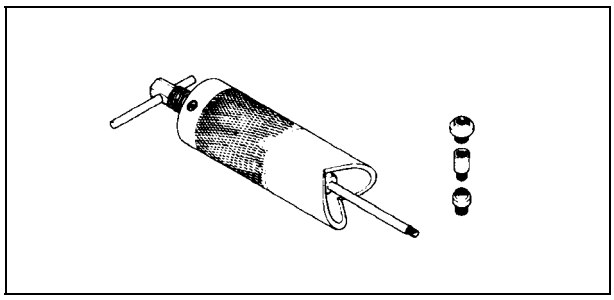

Valve Seat Cutter, 45° –ϕ24.5:
57001–1113

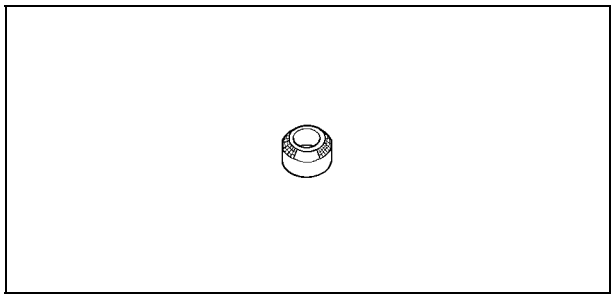

Valve Seat Cutter, 45° –ϕ27.5:
57001–1114

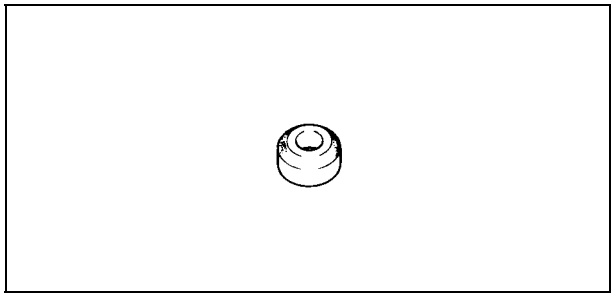

Valve Seat Cutter, 32° –ϕ25:
57001–1118

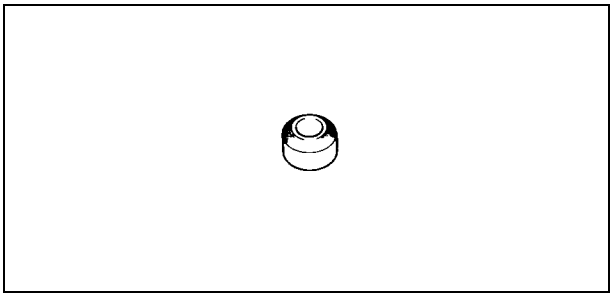

Valve Seat Cutter, 32° –ϕ28:
57001–1119

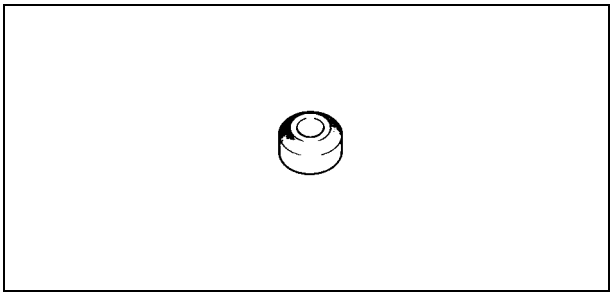

Valve Seat Cutter Holder Bar:
57001–1128

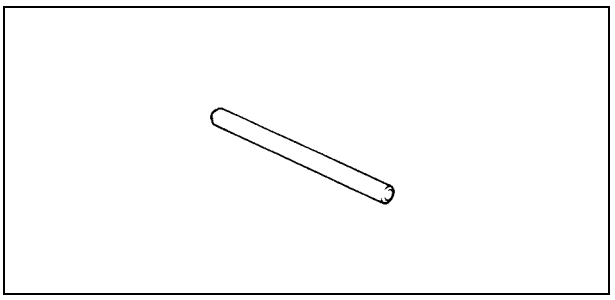

Valve Spring Compressor Adapter,ϕ21:
57001–1272

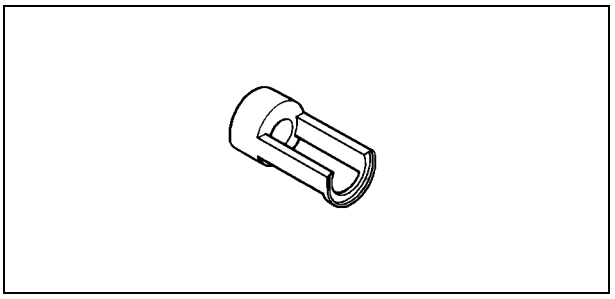

Spark Plug Wrench, Hex 16:
57001–1262

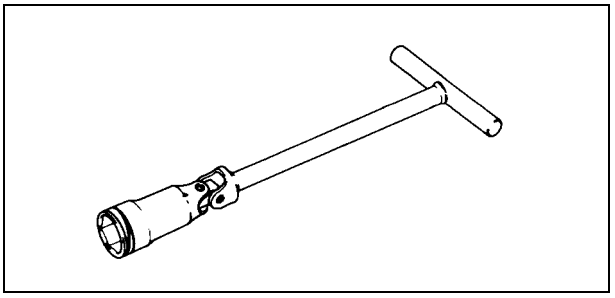

Special Tools and Sealant

Valve Guide Arbor, ϕ4:
57001–1273

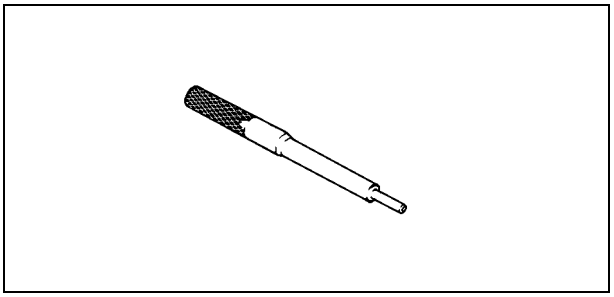

Valve Guide Reamer, ϕ4:
57001–1274

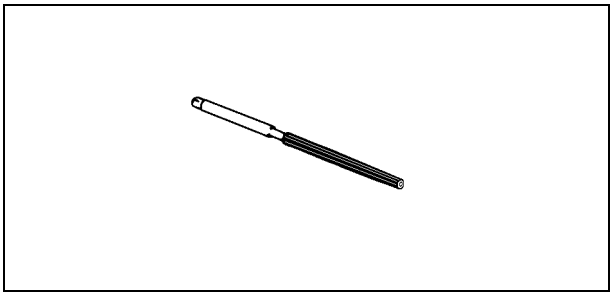

Valve Seat Cutter Holder, ϕ4:
57001–1275

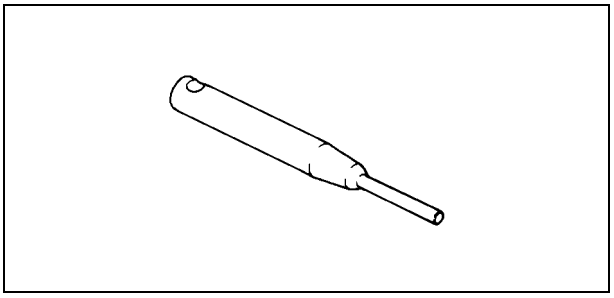

Fork Oil Level Gauge:
57001–1290

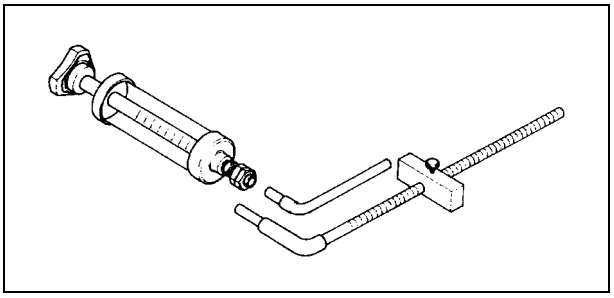

Compression Gauge Adapter, M10 × 1.0:
57001–1317

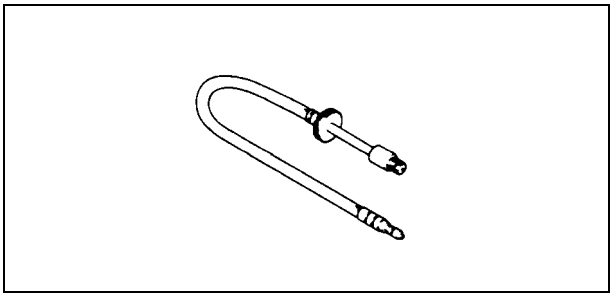

Valve Seat Cutter, 60° –ϕ25:
57001–1328

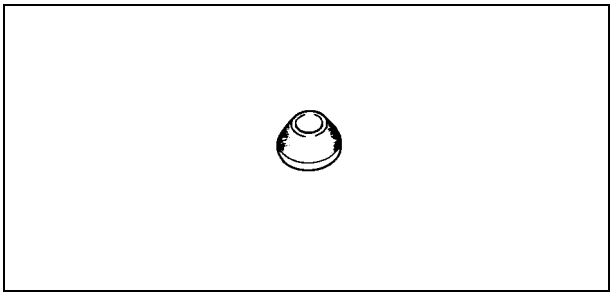

Valve Seat Cutter, 60° –ϕ27:
57001–1409

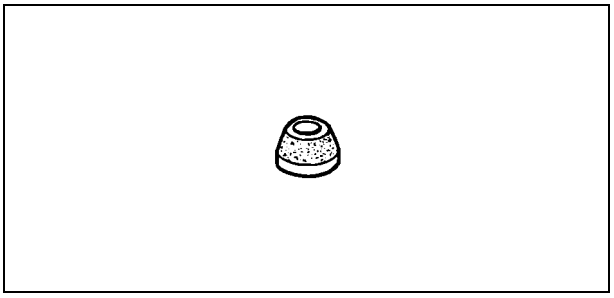

Kawasaki Bond (Silicone Sealant):
56019–120

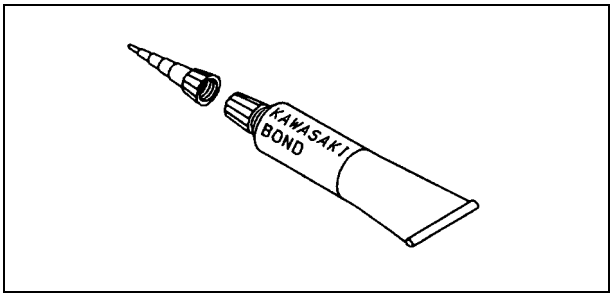

Clean Air System

Air Suction Valve Removal

- Remove:
  Seats (see Frame chapter)
  Fuel Tank, Air Cleaner Housing (see Fuel System (DFI) chapter)
- Push out the rubber plate right side [A].
- Separate the hoses [B] from the air suction valve cover.
- Remove:
  Air Suction Valve Cover Bolts [C]
  Air Suction Valve Cover [D]

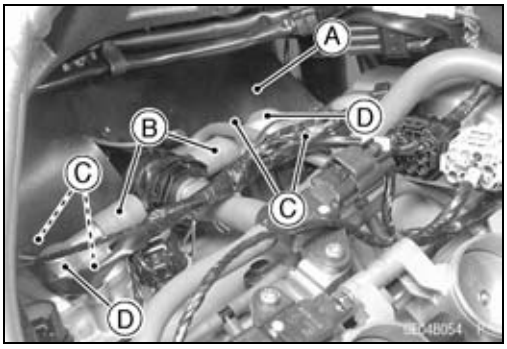

Air Suction Valve Installation

- Install the air suction valve so that opening [A] of the reeds faces the rear and downward.
- Apply a non-permanent locking agent to the threads of the air suction valve cover bolts, and tighten them with the specified torque.

Torque - Air Suction Valve Cover Bolts: 12 N·m (1.2 kgf·m, 104 in·lb)

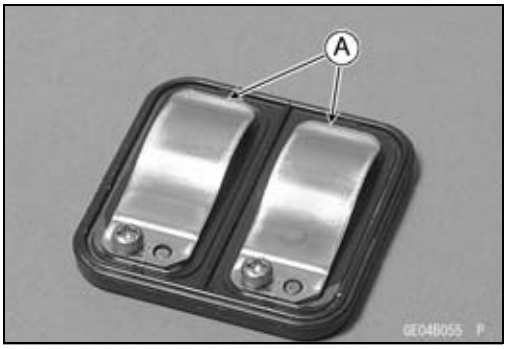

Air Suction Valve Inspection

○Refer to the Engine Top End in the Periodic Maintenance chapter.

Vacuum Switch Valve Removal

- Remove the throttle body assembly hose [A], clamp [B] and hoses [C].

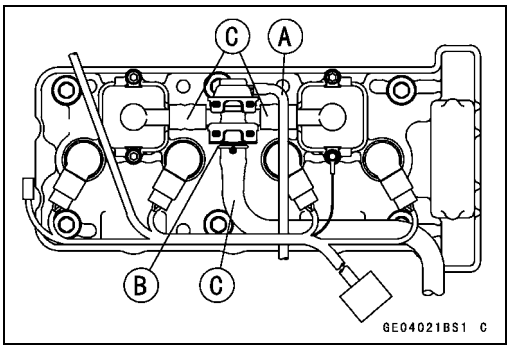

Vacuum Switch Valve Installation

- Install the vacuum switch valve so that the air duct [A] faces right side.
- Route the hoses correctly (see Appendix chapter).

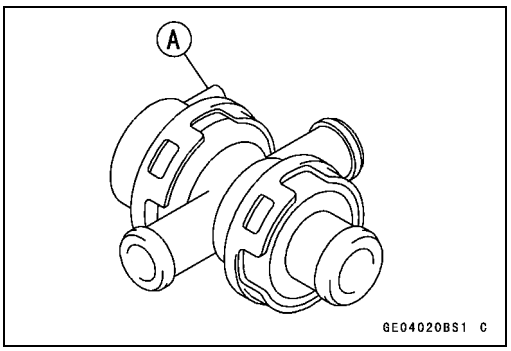

Clean Air System

Vacuum Switch Valve Test

- Remove:
  Fuel Tank, Air Cleaner Housing (see Fuel System (DFI) chapter)
  Vacuum Switch Valve
- Connect a vacuum gauge [A] and syringe [B] or fork oil level gauge to the vacuum hoses as shown.

Special Tool - Fork Oil Level Gauge: 57001-1290

Air Flow [C]

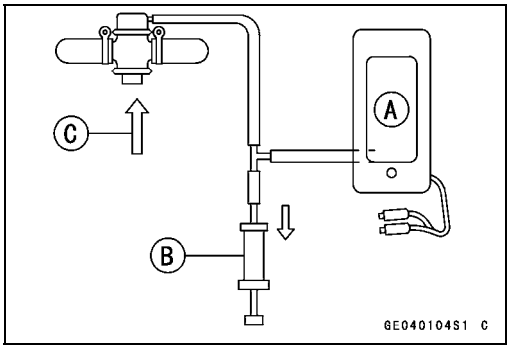

- Gradually raise the vacuum (lower the pressure) applied to the vacuum switch valve, and check the valve operation. When the vacuum is low, the vacuum switch valve should permit air to flow. When the vacuum raises to valve closing pressure, it should stop air flow.
  Spring [A]
  Diaphragm [B]
  Valve [C]
  Low Vacuum [D]
  Secondary Air Flow [E]

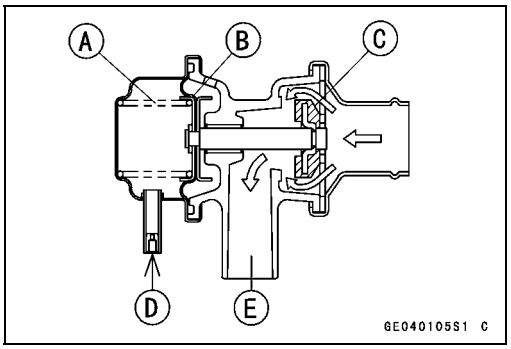

★If the vacuum switch valve does not operate as described, replace it with a new one.

NOTE

○*To check air flow through the vacuum switch valve, just blow through the air cleaner hose.*

Vacuum Switch Valve Closing Pressure (Open → Close)
Standard: 41 ~ 49 kPa (310 ~ 370 mmHg)

High Vacuum [A]
Secondary air cannot flow [B]

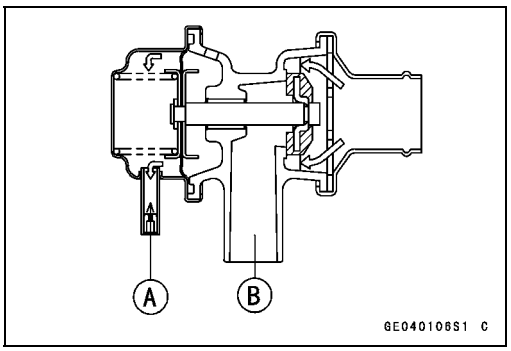

Clean Air System Hose Inspection

- Be certain that all the hoses are routed without being flattened or kinked, and are connected correctly to the air cleaner housing, vacuum switch valve, #2 and #3 throttle body and air suction valve covers.

★If they are not, correct them. Replace them if they are damaged.

Cylinder Head Cover

Cylinder Head Cover Removal

- Remove:
  Lower Fairing (see Frame chapter)
  Seats (see Frame chapter)
  Fuel Tank, Air Cleaner Housing and Throttle Body Assembly (see Fuel System (DFI) chapter)
  Vacuum Switch Valve [A] and Hoses [B]

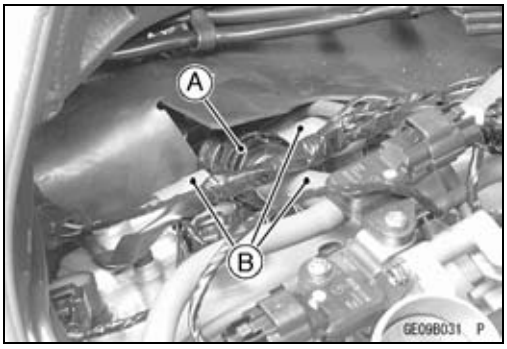

- Remove:
  Air suction valve cover bolts
  Air suction valve
- Push out the rubber plate right side [A].
- Remove the stick coils [B].

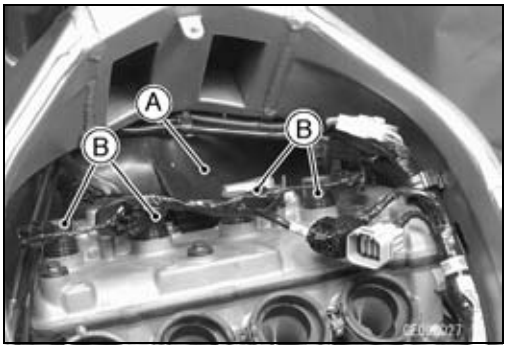

- Remove the main harness clamp [A].
- Remove the cylinder head cover bolts [B].

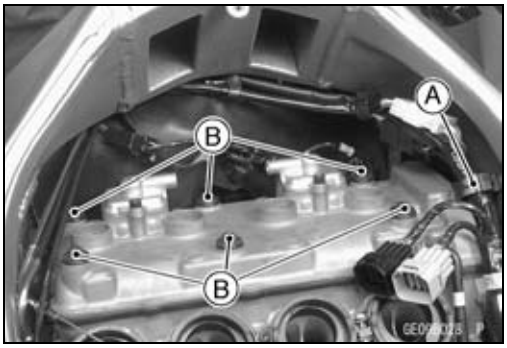

- Remove the cylinder head cover [A] to backward [B] floating it a little up.

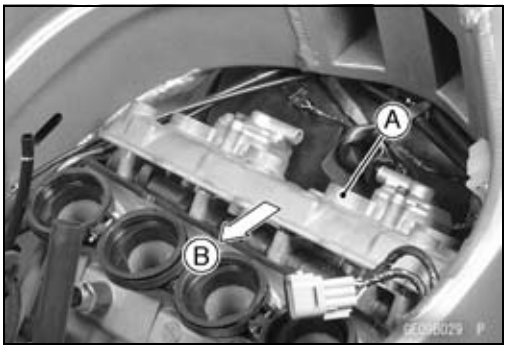

Cylinder Head Cover Installation

- Replace the head cover gasket with a new one if damaged.
- Apply silicone sealant to the cylinder head as shown [A].

Sealant - Kawasaki Bond (Silicone Sealant): 56019-120

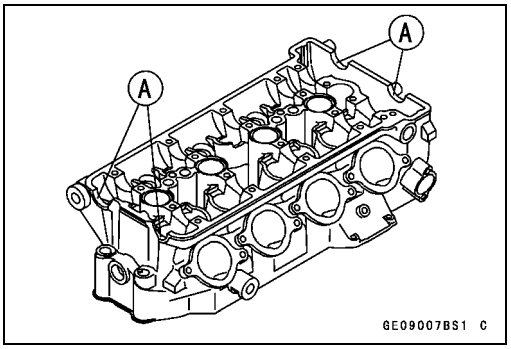

Cylinder Head Cover

- Be sure to install the pins [A] and rubber gaskets [B].

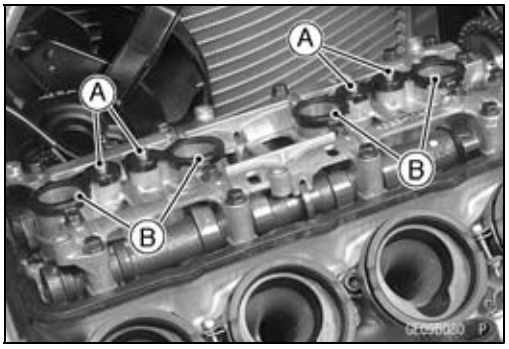

- Install the chain guide [A].
- Install the washer [B] with the metal side faces upward.
- Tighten:

Torque - Cylinder Head Cover Bolts: 9.8 N·m (1.0 kgf·m, 87 in·lb) [C]

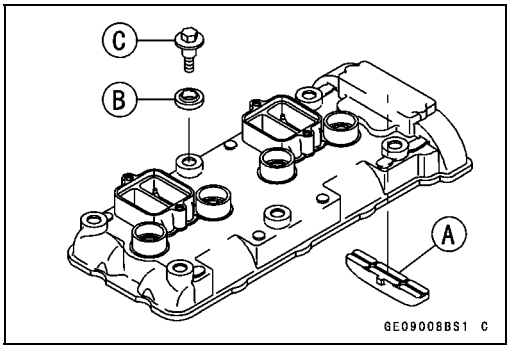

- Install the rubber plate so that left side [A] of it into between radiator fan and cylinder head cover, and light side [B] of it onto the cylinder head cover.
- Route the radiator fan harness, fan switch lead wire and camshaft position sensor lead wire in accordance with Harness Routing section in Appendix chapter.
- Install the air suction valve and air suction valve covers.

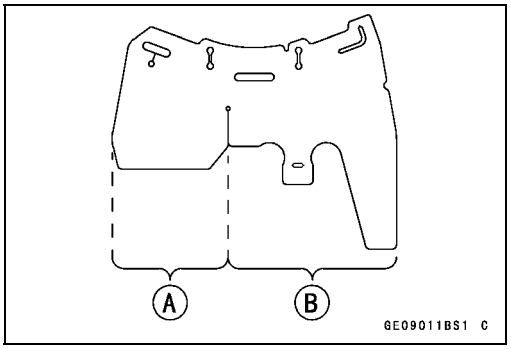

NOTE

○*Do not forget to install the engine ground lead on the back side bolt of right side air suction valve cover.*

Torque - Air Suction Valve Cover Bolts: 12 N·m (1.2 kgf·m, 104 in·lb)

- Install:
  Stick Coil
  Vacuum Switch Valve and Hoses
  Fuel Tank, Air Cleaner Housing and Throttle Body Assembly
  Seats
  Lower Fairing

Camshaft Chain Tensioner

Camshaft Chain Tensioner Removal

CAUTION

This is a non-return type camshaft chain tensioner. The push rod does not return to its original position once it moves out to take up camshaft chain slack. Observe all the rules listed below:
When removing the tensioner, do not take out the mounting bolts only halfway. Retightening the mounting bolts from this position could damage the tensioner and the camshaft chain. Once the bolts are loosened, the tensioner must be removed and reset as described in "Camshaft Chain Tensioner Installation."
Do not turn over the crankshaft while the tensioner is removed. This could upset the camshaft chain timing, and damage the valves.

- Remove:
  Seats (see Frame chapter)
  Fuel Tank (see Fuel System chapter)
  Cap Bolt [A]
  Washer [B]
  Spring [C]
  Rod [D]
- Remove the mounting bolts [E] and take off the camshaft chain tensioner.

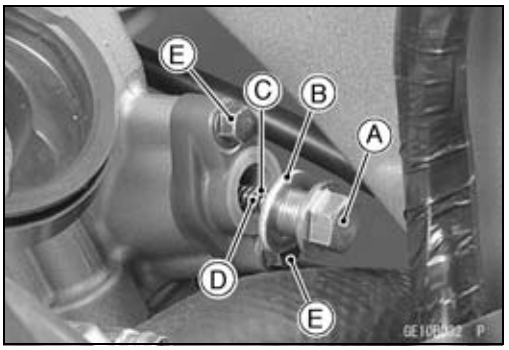

Camshaft Chain Tensioner Installation

- Apply grease to the O-ring.
- Release the stopper [A] and push the push rod [B] into the tensioner body [C].

○Insert the push rod so that the push rod teeth are leaved six notches.

- Install the tensioner body so that the stopper faces upward.

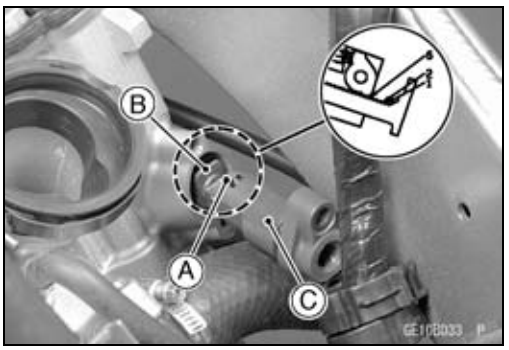

- Tighten:

  Torque - Camshaft Chain Tensioner Mounting Bolts [A]: 9.8 N·m (1.0 kgf·m, 87 in·lb)

- Install the rod, spring and washer.
- Tighten:

  Torque - Camshaft Chain Tensioner Cap Bolt [B]: 29 N·m (3.0 kgf·m, 21 ft·lb)

- Turn the crankshaft 2 turns clockwise to allow the tensioner to expand and recheck the camshaft chain timing.

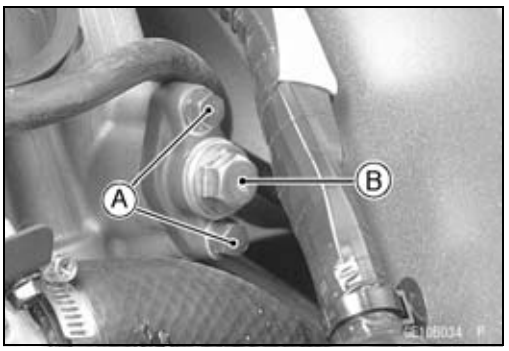

Camshaft, Camshaft Chain

Camshaft Removal

- Remove:
  Cylinder Head Cover (see Cylinder Head Cover Removal)
  Pickup Coil Cover
- Position the crankshaft at #1, 4 piston TDC.
  [A] TDC mark for #1, 4 Pistons
  [B] Timing Mark (crankcase halves mating surface)

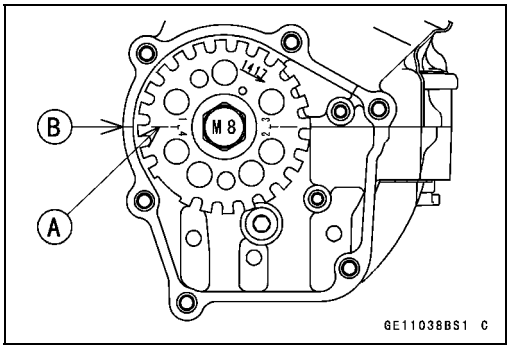

- Remove:
  Camshaft Chain Tensioner (see Camshaft Chain Tensioner Removal)
  Rubber Gaskets and Cylinder Head Cover Gasket
  Camshaft Cap Bolts
  Camshaft Cap [A]
  Camshafts [B]
- Stuff a clean cloth into the chain tunnel to keep any parts from dropping into the crankcase.

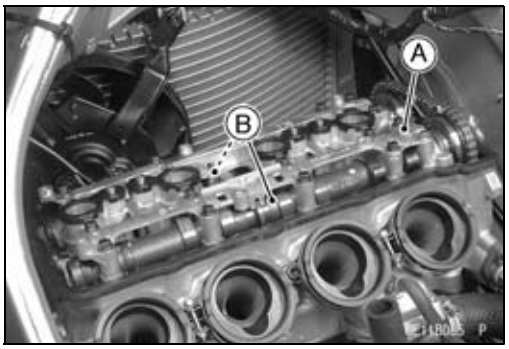

CAUTION

The crankshaft may be turned while the camshafts are removed. Always pull the chain taut while turning the crankshaft. This avoids kinking the chain on the lower (crankshaft) sprocket. A kinked chain could damage both the chain and the sprocket.

Camshaft Installation

- Be sure to install the following parts.
  [A] O-rings
  [B] O-rings
  [C] Pins

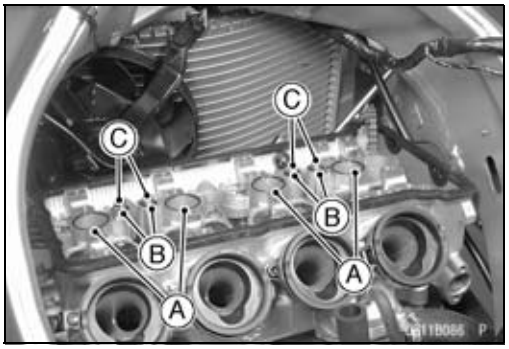

- Assemble the camshaft (see Camshaft and Sprocket Assembly).
- Apply engine oil to all cam parts and journals.
- If a new camshaft is to be used, apply a thin coat of molybdenum disulfide grease to the cam surfaces.

NOTE

○*The exhaust camshaft has a 161 EX mark [A] and the inlet camshaft has a 161 IN mark [B]. Be careful not to mix up these shafts.*

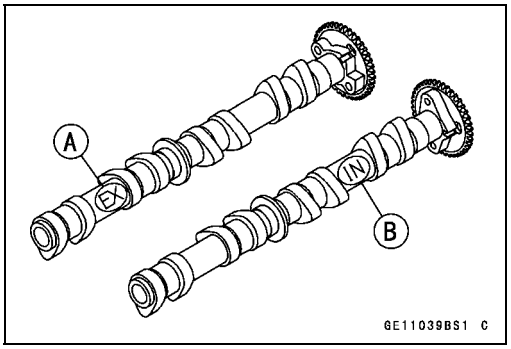

Camshaft, Camshaft Chain

- Position the crankshaft at #1, 4 piston TDC.
- Pull the tension side (exhaust side) [A] of the chain taut to install the chain.
- Engage the camshaft chain with the camshaft sprockets so that the timing marks on the sprockets are positioned as shown.

○The timing marks of #1, 4 must be aligned with the lower surface of crankcase of rear side [E].

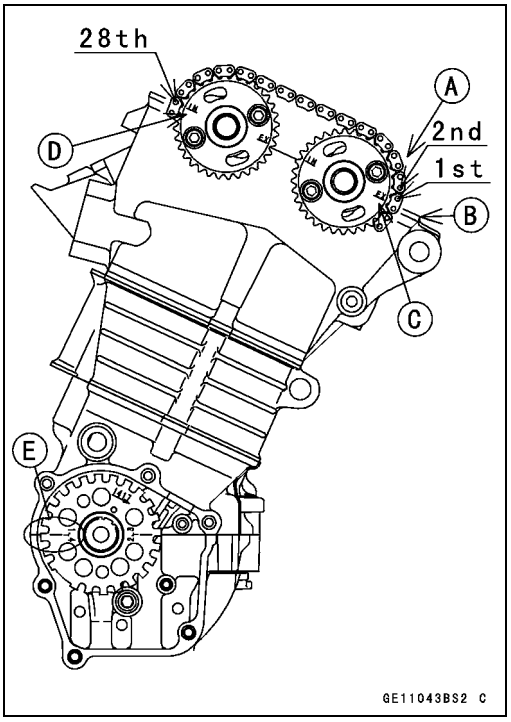

- Check to see the timing marks must be aligned with the cylinder head upper surface [B].
  [C] EX mark
  [D] IN mark

○Confirmation of inlet camshaft sprocket position is using mirror.

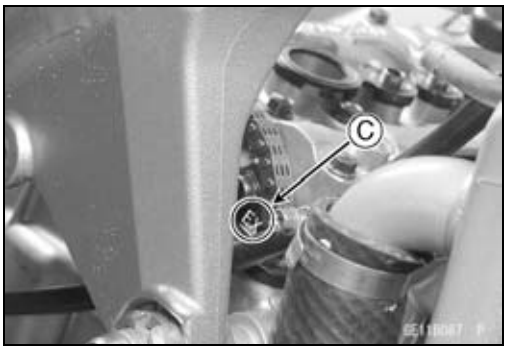

- Install the camshaft cap.

○First tighten the camshaft cap evenly to seat the camshaft in place, then tighten all bolts following the specified tightening sequence.

Torque - Camshaft Cap Bolts: 12 N·m (1.2 kgf·m, 104 in·lb)

- Tighten the camshaft chain tensioner (see Camshaft Chain Tensioner Installation).
- Install the cylinder head cover (see Cylinder Head Cover Installation).

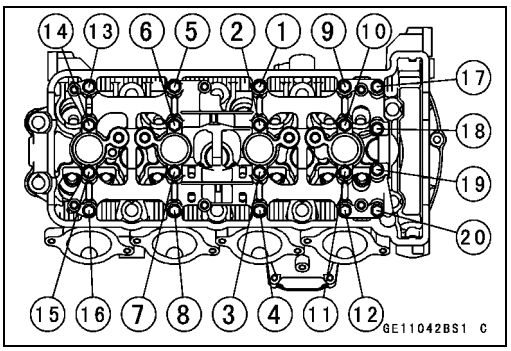

Camshaft, Camshaft Chain

Camshaft, Camshaft Cap Wear

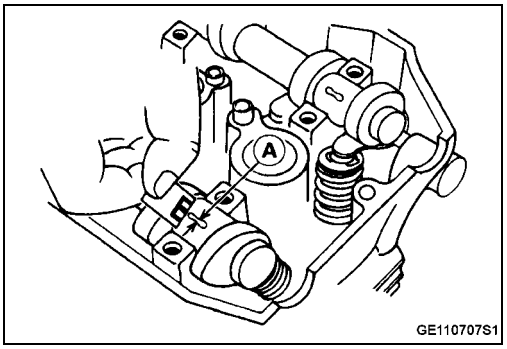

- Remove the camshaft cap (see Camshaft Removal).
- Cut strips of plastigage to journal width. Place a strip on each journal parallel to the camshaft installed in the correct position.
- Measure each clearance between the camshaft journal and the camshaft cap using plastigage (press gauge) [A].
- Tighten:

Torque - Camshaft Cap Bolts: 12 N·m (1.2 kgf·m, 104 in·lb)

NOTE

○*Do not turn the camshaft when the plastigage is between the journal and camshaft cap.*

Camshaft Journal, Camshaft Cap Clearance
Standard: 0.038 ~ 0.081 mm (0.001 ~ 0.003 in.)
Service Limit: 0.17 mm (0.007 in.)

★If any clearance exceeds the service limit, measure the diameter of each camshaft journal with a micrometer.

Camshaft Journal Diameter
Standard: 23.940 ~ 23.962 mm (0.9425 ~ 0.9434 in.)
Service Limit: 23.91 mm (0.941 in.)

★If the camshaft journal diameter is less than the service limit, replace the camshaft with a new one and measure the clearance again.
★If the clearance still remains out of the limit, replace the cylinder head unit.

Camshaft Runout

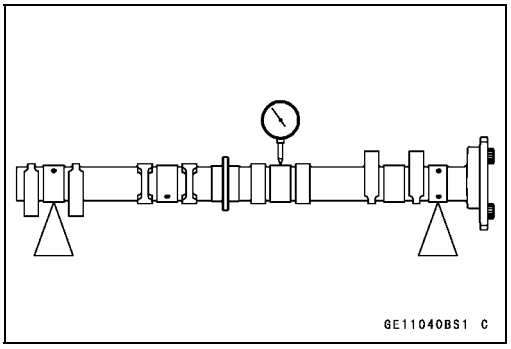

- Remove the camshaft (see Camshaft Removal).
- Set the camshaft in a camshaft alignment jig or on V blocks.
- Measure runout with a dial gauge at the specified place as shown.

★If the runout exceeds the service limit, replace the shaft.

Camshaft Runout
Standard: TIR 0.02 mm (0.00079 in.) or less
Service Limit: TIR 0.1 mm (0.004 in.)

Cam Wear

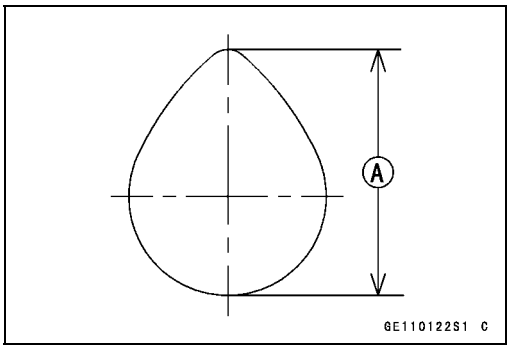

- Remove the camshaft (see Camshaft Removal).
- Measure the height [A] of each cam with a micrometer.

★If the cams are worn down past the service limit, replace the camshaft.

Cam Height

	Standard	Service Limit
Exhaust	33.146 ~ 33.254 mm (1.305 ~ 1.309 in.)	33.05 mm (1.30 in.)
Inlet	34.146 ~ 34.254 mm (1.344 ~ 1.349 in.)	34.05 mm (1.34 in.)

Camshaft, Camshaft Chain

Camshaft Chain Removal

- Split the crankcase (see Crankshaft/Transmission chapter).
- Remove the camshaft chain [A] from the crankshaft sprocket.

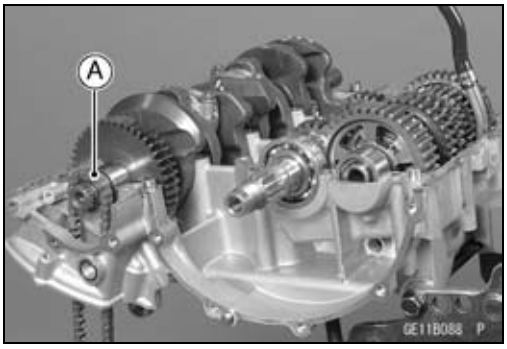

Camshaft and Sprocket Assembly

- Inlet and exhaust camshaft sprockets are the same.
- Install the sprockets so that the marked side faces outwards, and align the holes [A] on the camshaft and sprocket circular holes [B].
- Apply a non-permanent locking agent to the camshaft sprocket bolts and tighten them.

Torque - Camshaft Sprocket Bolts: 15 N·m (1.5 kgf·m, 11.0 ft·lb)

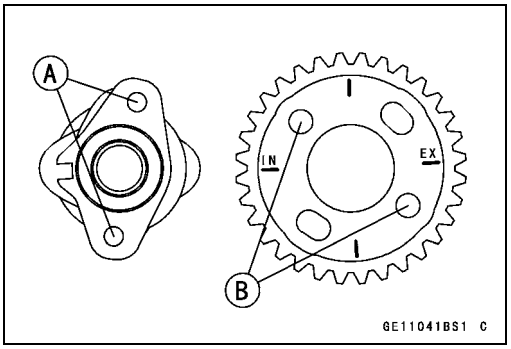

Cylinder Head

Cylinder Compression Measurement

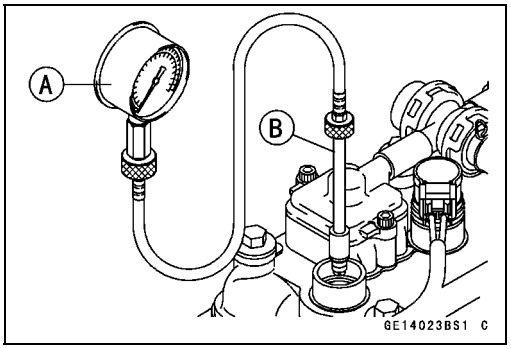

NOTE

○*Use the battery which is fully charged.*

- Warm up the engine thoroughly.
- Stop the engine.
- Remove:
  Seats (see Frame chapter)
  Fuel Tank (see Fuel System (DFI) chapter)
  Air Cleaner Housing (see Fuel System (DFI) chapter)
  Stick Coils
  Spark Plugs

Special Tool - Spark Plug Wrench, Hex 16: 57001-1262

- Attach the compression gauge [A] and adapter [B] firmly into the spark plug hole.

○Using the starter motor, turn the engine over with the throttle fully open until the compression gauge stops rising; the compression is the highest reading obtainable.

Special Tool - Compression Gauge: 57001-221
Compression Gauge Adapter, M10 × 1.0: 57001-1317

Cylinder Compression

Usable Range : 950 ~ 1 450 kPa (9.7 ~ 14.8 kgf/cm², 138 ~ 210 psi) @ 350 r/min (rpm)

- Repeat the measurement for the other cylinders.
- Install the spark plugs.

Torque - Spark Plugs: 13 N·m (1.3 kgf·m, 113 in·lb)

Cylinder Head

The following table should be consulted if the obtainable compression reading is not within the usable range.

Problem	Diagnosis	Remedy (Action)
Cylinder compression is higher than usable range	Carbon accumulation on piston and in combustion chamber possibly due to damaged valve stem oil seal and/or damaged piston oil rings (This may be indicated by white exhaust smoke).	Remove the carbon deposits and replace damaged parts if necessary.
	Incorrect cylinder head gasket thickness.	Replace the gasket with a standard part.
Cylinder compression is lower than usable range	Gas leakage around cylinder head	Replace damaged gasket and check cylinder head warp.
	Bad condition of valve seating	Repair if necessary.
	Incorrect valve clearance.	Adjust the valve clearance.
	Incorrect piston/cylinder clearance	Replace the piston and/or cylinder
	Piston seizure.	Inspect the cylinder and replace/repair the cylinder and/or piston as necessary.
	Bad condition of piston ring and/or piston ring grooves	Replace the piston and/or the piston rings.

Cylinder Head Removal

- Drain the coolant (see Cooling System in the Periodic Maintenance chapter).
- Remove:
  Engine (see Engine Removal/Installation chapter)
  Cylinder Head Cover (see Cylinder Head Cover Removal)
  Camshaft Chain Tensioner (see Camshaft Chain Tensioner Removal)
  Camshafts (see Camshaft Removal)
  Camshaft Position Sensor [A] (see Electrical System chapter)

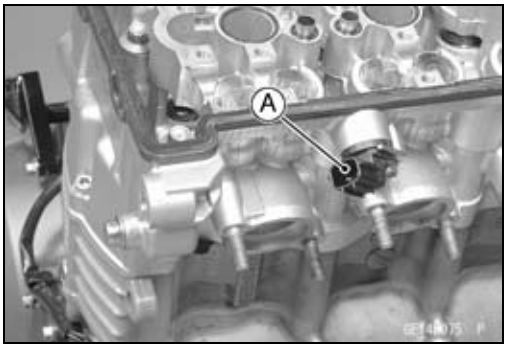

- Remove the 6 mm cylinder head bolts [A], and then the 9 mm cylinder head bolts [B].
- Take off the cylinder head.

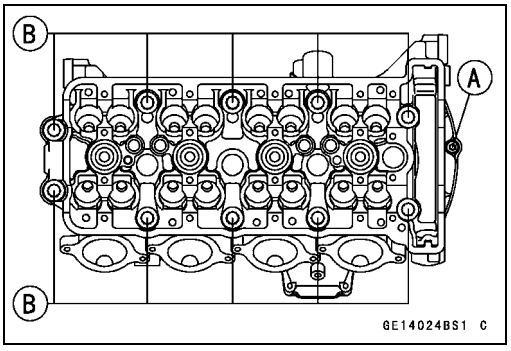

Cylinder Head

Cylinder Head Installation

NOTE

○*The camshaft cap is machined with the cylinder head, so if a new cylinder head is installed, use the cap that is supplied with the new head.*

- Install a new cylinder head gasket and knock pins.
- Apply molybdenum disulfide oil to both sides [A] of the cylinder head bolt washers.

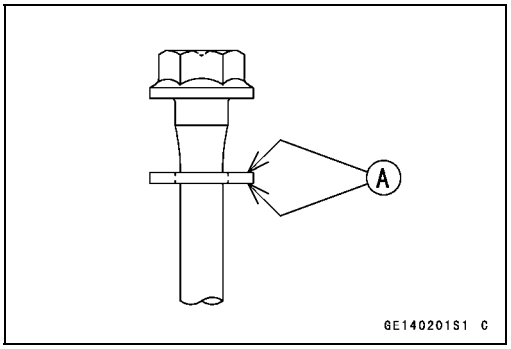

- Tighten the 9 mm cylinder head bolts following the tightening sequence [1 ~ 10].

Torque -	**Cylinder Head Bolts (9 mm):**	
First		**20 N·m (2.0 kgf·m, 14.5 ft·lb)**
Final	**Used Bolts**	**40 N·m (4.1 kgf·m, 30 ft·lb)**

- Tighten the 6 mm cylinder head bolts [11].

Torque - Cylinder Head Bolts (6 mm): 12 N·m (1.2 kgf·m, 104 in·lb)

- Install the camshaft position sensor (see Electrical System chapter).

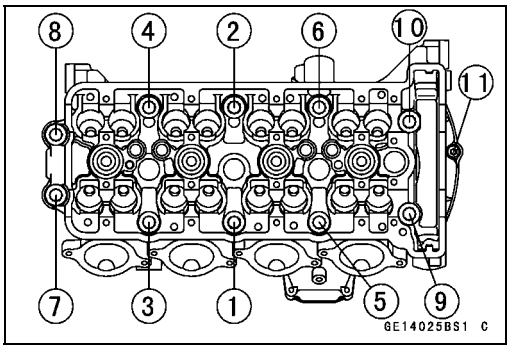

Cylinder Head Warp

- Lay a straightedge across the lower surface of the cylinder head at several positions.
- Use a thickness gauge [A] to measure the space between the straightedge [B] and the head.

Cylinder Head Warp

Standard:	**- - -**
Service Limit:	**0.05 mm (0.002 in.)**

★If the cylinder head is warped more than the service limit, replace it.

★If the cylinder head is warped less than the service limit, repair the head by rubbing the lower surface on emery paper secured to a surface plate (first No. 200, then No. 400).

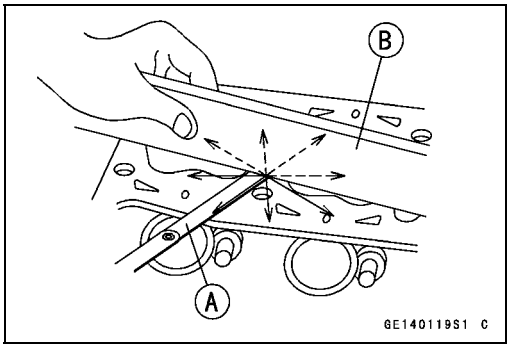

Valves

Valve Clearance Inspection

○Refer to the Engine Top End in the Periodic Maintenance chapter.

Valve Clearance Adjustment

○Refer to the Engine Top End in the Periodic Maintenance chapter.

Valve Removal

- Remove the cylinder head (see Cylinder Head Removal).
- Remove the valve lifter and shim.

○Mark and record the valve lifter and shim locations so they can be installed in their original positions.

- Using the valve spring compressor assembly, remove the valve.

Special Tools - Valve Spring Compressor Assembly: 57001 -241 [A]
Adapter, ϕ21: 57001-1272 [B]

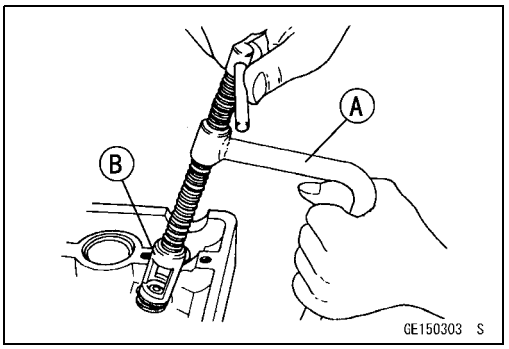

Valve Installation

- Replace the oil seal with a new one.
- Apply a thin coat of molybdenum disulfide grease to the valve stem before valve installation.
- Install the springs so that the closed coil end faces downwards.

[A] Valve Stem
[B] Oil Seal
[C] Spring Seat
[D] Closed Coil End
[E] Valve Springs
[F] Retainer
[G] Split Keepers

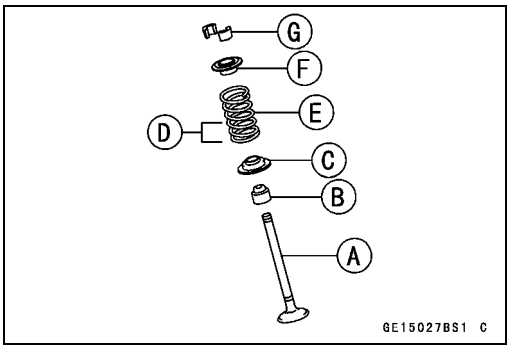

Valve Guide Removal

- Remove:
  Valve (see Valve Removal)
  Oil Seal
  Spring Seat
- Heat the area around the valve guide to 120 ~ 150°C (248 ~ 302 °F), and hammer lightly on the valve guide arbor [A] to remove the guide from the top of the head.

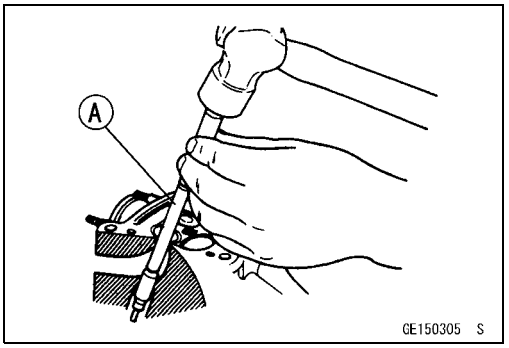

CAUTION
Do not heat the cylinder head with a torch. This will warp the cylinder head. Soak the cylinder head in oil and heat the oil.

Special Tool - Valve Guide Arbor,ϕ4: 57001-1273

Valves

Valve Guide Installation

- Apply oil to the valve guide outer surface before installation.
- Heat the area around the valve guide hole to about 120 ~ 150 °C (248 ~ 302 °F).
- Drive the valve guide in from the top of the head using the valve guide arbor. The flange stops the guide from going in too far.

Special Tool - Valve Guide Arbor,ϕ4: 57001-1273

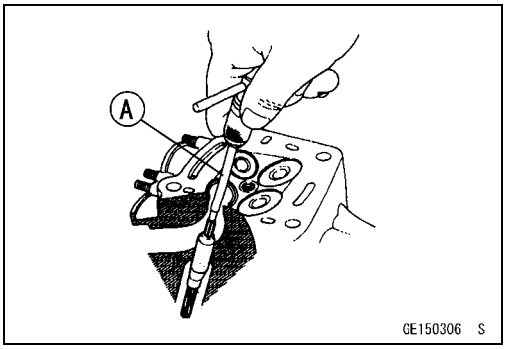

- Wait until the cylinder head cools down and then ream the valve guide with the valve guide reamer [A] even if the old guide is reused.

○Turn the reamer in a clockwise direction until the reamer turns freely in the guide. Never turn the reamer counterclockwise or it will be dulled.

○Once the guides are reamed they must be cleaned thoroughly.

Special Tool - Valve Guide Reamer,ϕ4: 57001-1274

Valve-to-Guide Clearance Measurement (Wobble Method)

If a small bore gauge is not available, inspect the valve guide wear by measuring the valve to valve guide clearance with the wobble method as indicated below.

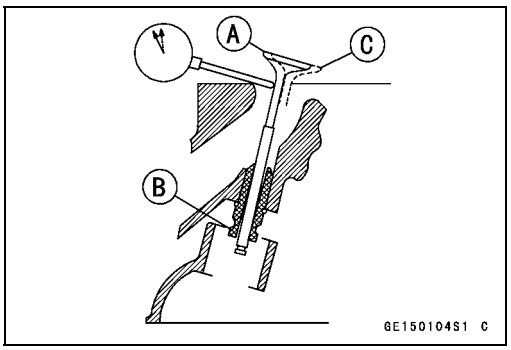

- Insert a new valve [A] into the guide [B] and set a dial gauge against the stem perpendicular to it as close as possible to the cylinder head mating surface.
- Move the stem back and forth [C] to measure valve/valve guide clearance.
- Repeat the measurement in a direction at a right angle to the first.

★If the reading exceeds the service limit, replace the guide.

NOTE

○*The reading is not actual valve/valve guide clearance because the measuring point is above the guide.*

Valve/Valve Guide Clearance (Wobble Method)

	Standard	Service Limit
Inlet	**0.03 ~ 0.12 mm**	**0.29 mm**
	(0.0012 ~ 0.0047 in.)	**(0.011 in.)**
Exhaust	**0.10 ~ 0.18 mm**	**0.35 mm**
	(0.0039 ~ 0.0071 in.)	**(0.014 in.)**

Valves

Valve Seat Inspection

- Remove the valve (see Valve Removal).
- Check the valve seating surface [A] between the valve [B] and valve seat [C].

○Measure the outside diameter [D] of the seating pattern on the valve seat.

★If the outside diameter is too large or too small, repair the seat (see Seat Repair).

Valve Seating Surface Outside Diameter

Standard:	**Inlet**	**26.4 ~ 26.6 mm (1.04 ~ 1.05 in.)**
	Exhaust	**22.1 ~ 22.3 mm (0.87 ~ 0.88 in.)**

○Measure the seat width [E] of the portion where there is no build-up carbon (white portion) of the valve seat with a vernier caliper.

Good [F]

★If the width is too wide [G], too narrow [H] or uneven [J], repair the seat (see Valve Seat Repair).

Valve Seating Surface Width

Standard:	**Inlet, Exhaust**	**0.5 ~ 1.0 mm (0.02 ~ 0.04 in.)**

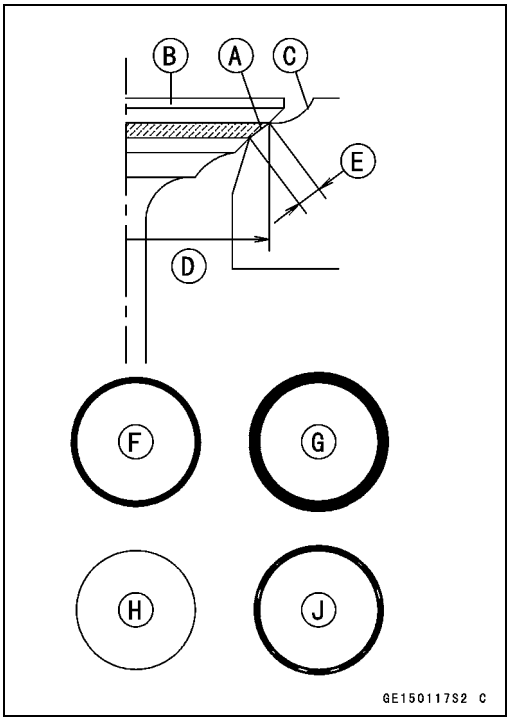

Valve Seat Repair

- Repair the valve seat with the valve seat cutters [A].

Special Tools -
Valve Seat Cutter Holder,ϕ4: 57001-1275 [B]
Valve Seat Cutter Holder Bar: 57001-1128 [C]
[For Inlet Valve Seat]
Valve Seat Cutter, 45° -ϕ24: 57001-1113
Valve Seat Cutter, 32° -ϕ25: 57001-1118
Valve Seat Cutter, 60° -ϕ25: 57001-1328
[For Exhaust Valve Seat]
Valve Seat Cutter, 45° -ϕ27.5: 57001-1114
Valve Seat Cutter, 32° -ϕ28 : 57001-1119
Valve Seat Cutter, 60° -ϕ27: 57001-1409

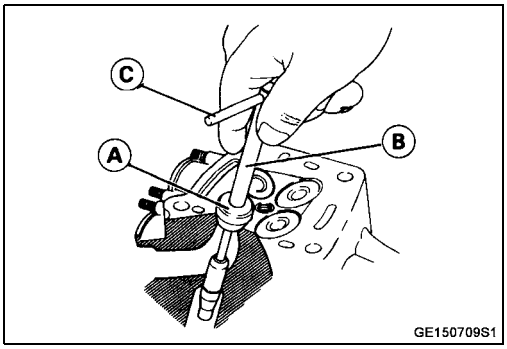

★If the manufacturer's instructions are not available, use the following procedure.

Valves

Seat Cutter Operation Care:

1. This valve seat cutter is developed to grind the valve for repair. Therefore the cutter must not be used for other purposes than seat repair.
2. Do not drop or shock the valve seat cutter, or the diamond particles may fall off.
3. Do not fail to apply engine oil to the valve seat cutter before grinding the seat surface. Also wash off ground particles sticking to the cutter with washing oil.

NOTE

○*Do not use a wire brush to remove the metal particles from the cutter. It will take off the diamond particles.*

4. Setting the valve seat cutter holder in position, operate the cutter in one hand. Do not apply too much force to the diamond portion.

NOTE

○*Prior to grinding, apply engine oil to the cutter and during the operation, wash off any ground particles sticking to the cutter with washing oil.*

5. After use, wash it with washing oil and apply thin layer of engine oil before storing.

Marks Stamped on the Cutter:

The marks stamped on the back of the cutter [A] represent the following.

60° ..... Cutter angle [B]
37.5ϕ ..... Outer diameter of cutter [C]

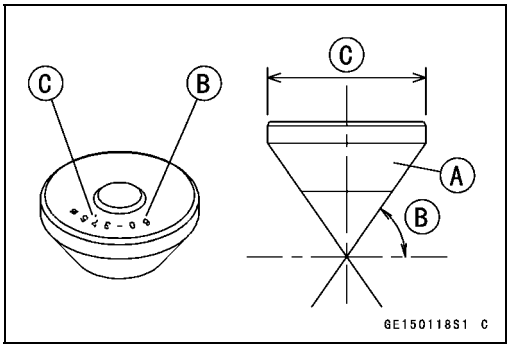

Operating Procedures:

- Clean the seat area carefully.
- Coat the seat with machinist's dye.
- Fit a 45° cutter into the holder and slide it into the valve guide.
- Press down lightly on the handle and turn it right or left. Grind the seating surface only until it is smooth.

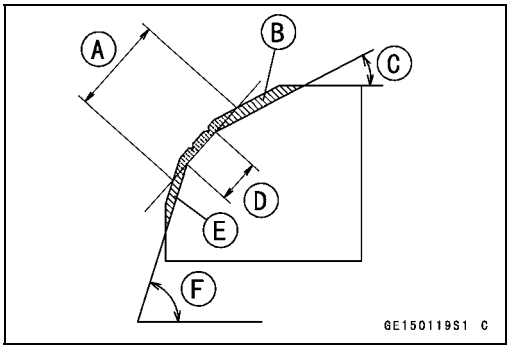

CAUTION

Do not grind the seat too much. Overgrinding will reduce valve clearance by sinking the valve into the head. If the valve sinks too far into the head, it will be impossible to adjust the clearance, and the cylinder head must be replaced.

Widened Width [A] of engagement by machining with 45° cutter
Ground Volume [B] by 32° cutter
32° [C]
Correct Width [D]
Ground Volume [E] by 60° cutter
60° [F]

Valves

- Measure the outside diameter of the seating surface with a vernier caliper.

★If the outside diameter of the seating surface is too small, repeat the 45° grind [A] until the diameter is within the specified range.

Original Seating Surface [B]

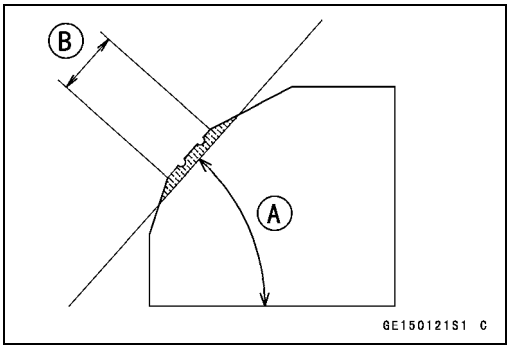

NOTE

○*Remove all pittings of flaws from 45° ground surface.*

○*After grinding with 45° cutter, apply thin coat of machinist's dye to seating surface. This makes seating surface distinct and 32° and 60° grinding operation easier.*

○*When the valve guide is replaced, be sure to grind with 45° cutter for centering and good contact.*

★If the outside diameter of the seating surface is too large, make the 32° grind described below.

★If the outside diameter [A] of the seating surface is within the specified range, measure the seat width as described below.

- Grind the seat at a 32° angle [B] until the seat O.D. is within the specified range.

○To make the 32° grind, fit a 32° cutter into the holder, and slide it into the valve guide.

○Turn the holder one turn at a time while pressing down very lightly. Check the seat after each turn.

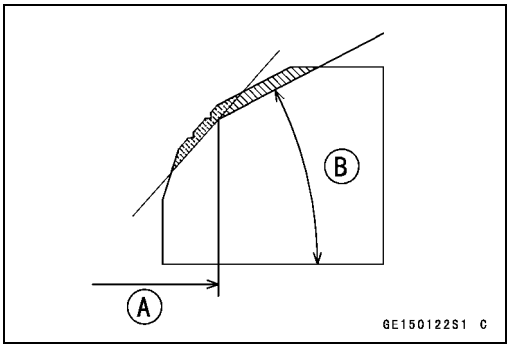

CAUTION
The 32° cutter removes material very quickly. Check the seat outside diameter frequently to prevent overgrinding.

○After making the 32° grind, return to the seat O.D. measurement step above.

- To measure the seat width, use a vernier caliper to measure the width of the 45° angle portion of the seat at several places around the seat.

★If the seat width is too narrow, repeat the 45° grind until the seat is slightly too wide, and then return to the seat O.D. measurement step above.

★If the seat width is too wide, make the 60° [A] grind described below.

★If the seat width is within the specified range, lap the valve to the seat as described below.

- Grind the seat at a 60° angle until the seat width is within the specified range.

○To make the 60° grind, fit 60° cutter into the holder, and slide it into the valve guide.

○Turn the holder, while pressing down lightly.

○After making the 60° grind, return to the seat width measurement step above.

Correct Width [B]

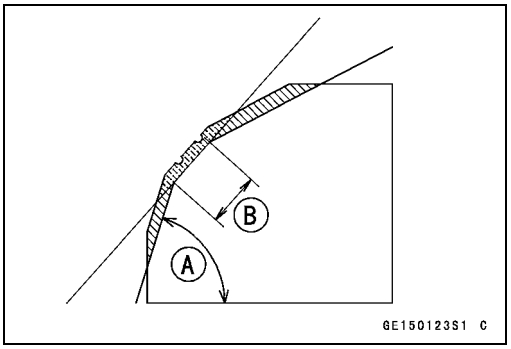

Valves

- Lap the valve to the seat, once the seat width and O.D. are within the ranges specified above.

○Put a little coarse grinding compound on the face of the valve in a number of places around the valve head.

○Spin the valve against the seat until the grinding compound produces a smooth, matched surface on both the seat and the valve.

○Repeat the process with a fine grinding compound.

[A] Lapper
[B] Valve Seat
[C] Valve

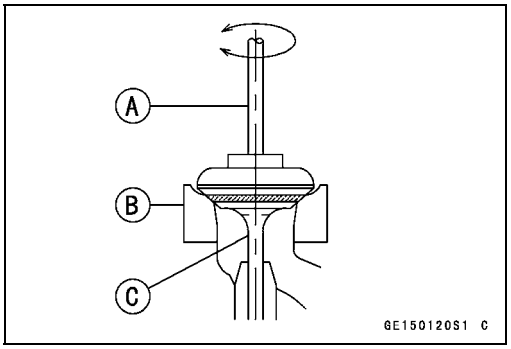

- The seating area should be marked about in the middle of the valve face.

★If the seat area is not in the right place on the valve, check to be sure the valve is the correct part. If it is, it may have been refaced too much; replace it.

- Be sure to remove all grinding compound before assembly.
- When the engine is assembled, be sure to adjust the valve clearance (see Engine Top End in the Periodic Maintenance chapter).

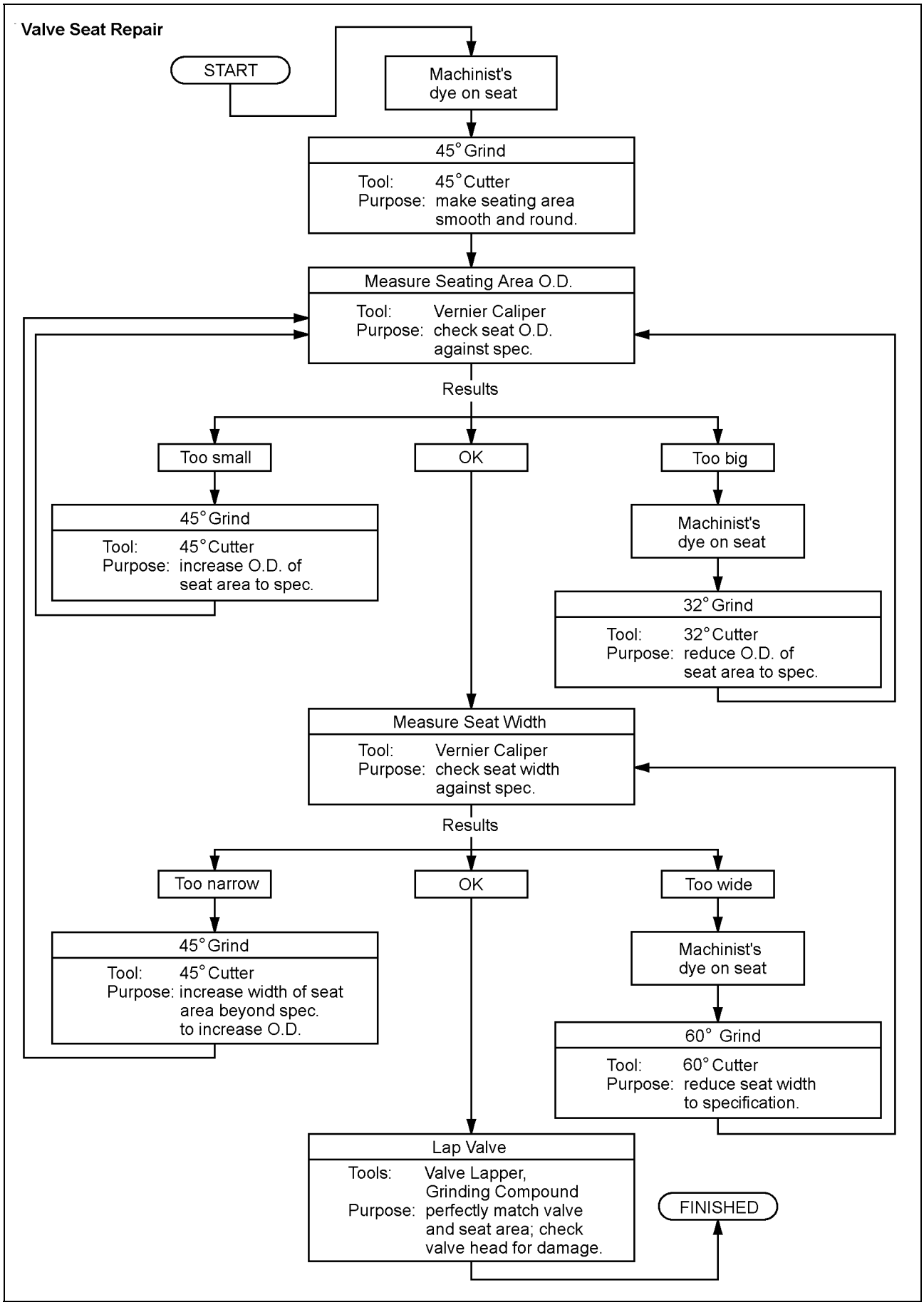
Valve Seat Repair
START
Machinist's dye on seat
45° Grind
Tool: 45° Cutter
Purpose: make seating area smooth and round.
Measure Seating Area O.D.
Tool: Vernier Caliper
Purpose: check seat O.D. against spec.
Results
Too small
OK
Too big
45° Grind
Tool: 45° Cutter
Purpose: increase O.D. of seat area to spec.
Machinist's dye on seat
32° Grind
Tool: 32° Cutter
Purpose: reduce O.D. of seat area to spec.
Measure Seat Width
Tool: Vernier Caliper
Purpose: check seat width against spec.
Results
Too narrow
OK
Too wide
45° Grind
Tool: 45° Cutter
Purpose: increase width of seat area beyond spec. to increase O.D.
Machinist's dye on seat
60° Grind
Tool: 60° Cutter
Purpose: reduce seat width to specification.
Lap Valve
Tools: Valve Lapper, Grinding Compound
Purpose: perfectly match valve and seat area; check valve head for damage.
FINISHED

Cylinder, Pistons

Cylinder Removal

- Remove:
  Engine (see Engine Removal/Installation chapter)
  Cylinder Head (see Cylinder Head Removal)
- Remove the cylinder.

Cylinder Installation

NOTE

○*If a new cylinder is used, use new piston ring.*

- Install the pins [A] and new cylinder gasket [B].
- Apply engine oil to the cylinder bore.
- Prepare two auxiliary head bolts with their head cut.
- Install the two bolts [C] diagonally in the crankcase.

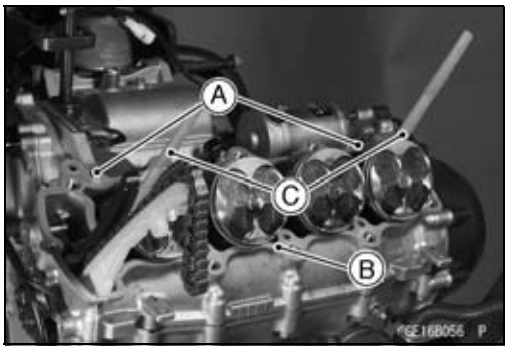

- The piston ring openings must be positioned as shown in the figure. The openings of the oil ring steel rails must be about 30 – 40° of angle from the opening of the top ring.

[A] Top Ring	[D] Oil Ring Expander
[B] Second Ring	[E] Lower Oil Ring Steel Rail
[C] Upper Oil Ring Steel Rail	[F] Hollow

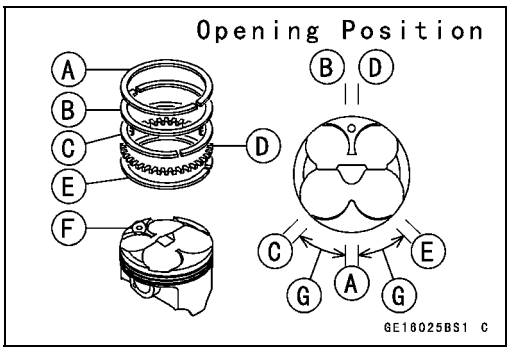

- Position the crankshaft so that all the piston heads are almost level.
- Install the cylinder block [A].
  Auxiliary Head Bolts [B]
  Pistons [C]
- Insert the piston rings with your thumbs.

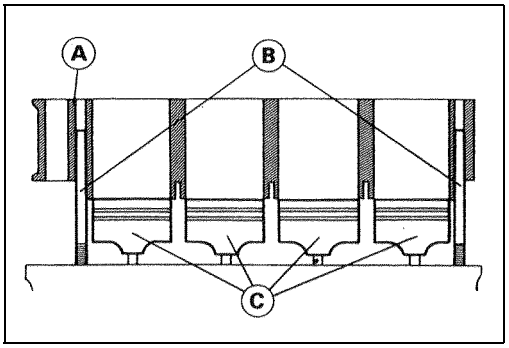

Piston Removal

- Remove the cylinder (see Cylinder Removal).
- Place a clean cloth under the pistons and remove the piston pin snap ring [A] from the outside of each piston.

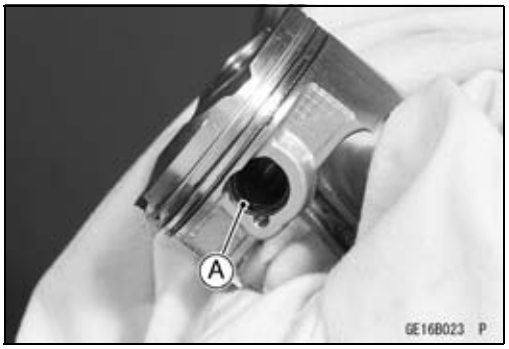

- Remove the piston pins.

  Special Tool - Piston Pin Puller Assembly: 57001-910 [A]

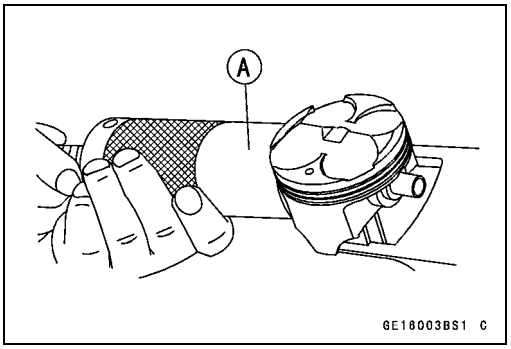

- Carefully spread the ring opening with your thumbs and then push up on the opposite side of the ring [A] to remove it.
- Remove the 3-piece oil ring with your thumbs in the same manner.

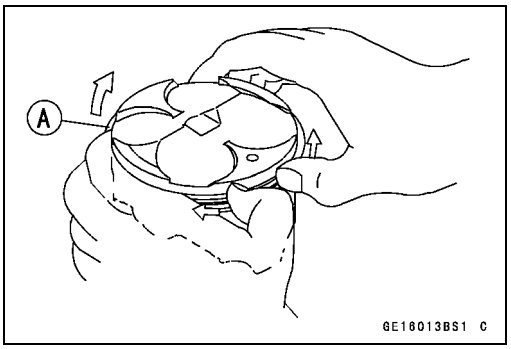

Piston Installation

NOTE

○*If a new piston is used, use new piston ring.*

- Install the piston with its marking hollow facing forward.
- Fit a new piston pin snap ring into the side of the piston so that the ring opening [A] does not coincide with the slit [B] of the piston pin hole.

○When installing the piston pin snap ring, compress it only enough to install it and no more.

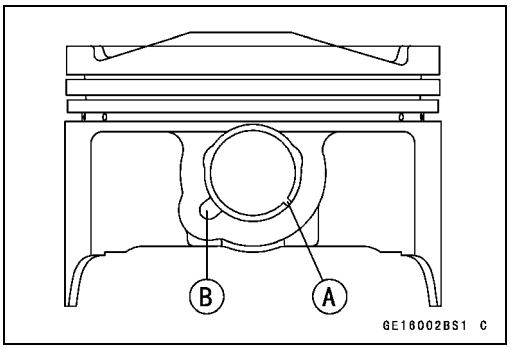

CAUTION

Do not reuse snap rings, as removal weakens and deforms them.
They could fall out and score the cylinder wall.

- Install the oil ring expander [A] in the bottom piston ring groove so the ends [B] butt together.
- Install the oil ring steel rails, one above the expander and one below it.

○Spread the rail with your thumbs, but only enough to fit the rail over the piston.

○Release the rail into the bottom piston ring groove.

NOTE

○*The oil ring rails have no “top” or “bottom”.*

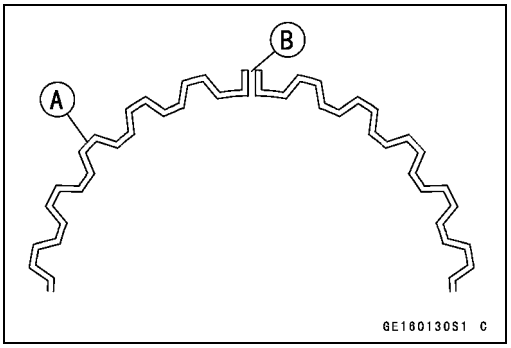

Cylinder, Pistons

- Do not mix up the top and second ring.
- Install the top ring [A] so that the "R" mark [B] faces up.
- Install the second ring [C] so that the "RN" mark [D] faces up.

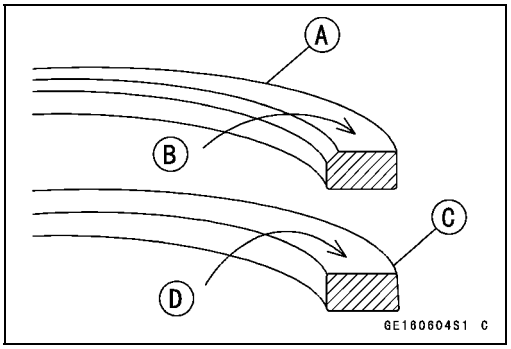

Cylinder Wear

- Since there is a difference in cylinder wear in different directions, take a side-to-side and a front-to-back measurement at each of the two locations (total of four measurements) shown in the figure.

★If any of the cylinder inside diameter measurements exceeds the service limit, replace the cylinder.
[A] 10 mm (0.39 in.)
[B] 60 mm (2.36 in.)

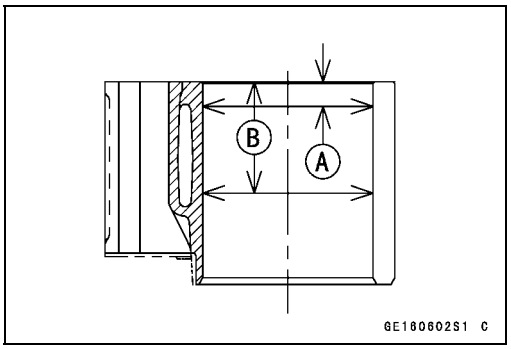

Cylinder Inside Diameter

Standard:

ZX636	**68.000 ~ 68.012 mm (2.677 ~ 2.678 in.)**
ZX600	**67.000 ~ 67.012 mm (2.637 ~ 2.638 in.)**

Service Limit:

ZX636	**68.10 mm (2.68 in.)**
ZX600	**67.10 mm (2.64 in.)**

Piston Wear

- Measure the outside diameter [A] of each piston 5 mm (0.20 in.) [B] up from the bottom of the piston at a right angle to the direction of the piston pin.

★If the measurement is under service limit, replace the piston.

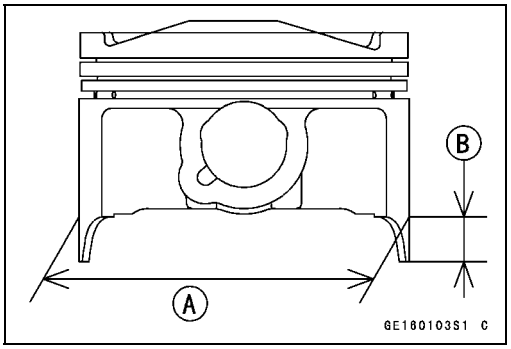

Piston Diameter

Standard:

ZX636	**67.975 ~ 67.990 mm (2.676 ~ 2.677 in.)**
ZX600	**66.975 ~ 66.990 mm (2.636 ~ 2.637 in.)**

Service Limit:

ZX636	**67.83 mm (2.67 in.)**
ZX600	**66.83 mm (2.63 in.)**

Cylinder, Pistons

Piston Ring, Piston Ring Groove Wear

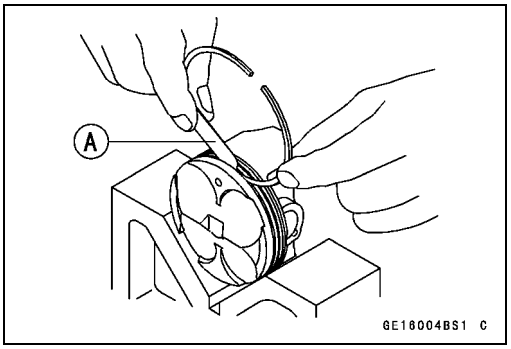

- Check for uneven groove wear by inspecting the ring seating.

★The rings should fit perfectly parallel to groove surfaces. If not, replace the piston and all the piston rings.

- With the piston rings in their grooves, make several measurements with a thickness gauge [A] to determine piston ring/groove clearance.

Piston Ring/Groove Clearance

Standard		
Top	**ZX636**	**0.03 ~ 0.05 mm (0.0012 ~ 0.0020 in.)**
	ZX600	**0.05 ~ 0.09 mm (0.0020 ~ 0.0035 in.)**
Second		**0.03 ~ 0.07 mm (0.0012 ~ 0.0028 in.)**
Service Limit		
Top	**ZX636**	**0.15 mm (0.0059 in.)**
	ZX600	**0.19 mm (0.0075 in.)**
Second		**0.17 mm (0.0067 in.)**

Piston Ring Groove Width

- Measure the piston ring groove width.

○Use a vernier caliper at several points around the piston.

Piston Ring/Groove Width

Standard		
Top	**ZX636**	**0.82 ~ 0.84 mm (0.0322 ~ 0.0331 in.)**
	ZX600	**0.84 ~ 0.86 mm (0.0331 ~ 0.0339 in.)**
Second		**0.82 ~ 0.84 mm (0.323 ~ 0.0331 in.)**
Service Limit		
Top	**ZX636**	**0.92 mm (0.036 in.)**
	ZX600	**0.94 mm (0.037 in.)**
Second		**0.92 mm (0.036 in.)**

★If the width of any of the two grooves is wider than the service limit at any point, replace the piston.

Cylinder, Pistons

Piston Ring Thickness

- Measure the piston ring thickness.

○Use the micrometer to measure at several points around the ring.

Piston Ring Thickness

	Standard	Service Limit
Top	**0.77 ~ 0.79 mm (0.0303 ~ 0.0311 in.)**	**0.70 mm (0.028 in.)**
Second	**0.77 ~ 0.79 mm (0.0303 ~ 0.0311 in.)**	**0.70 mm (0.028 in.)**

★If any of the measurements is less than the service limit on either of the rings, replace all the rings.

NOTE

○*When using new rings in a used piston, check for uneven groove wear. The rings should fit perfectly parallel to the groove sides. If not, replace the piston.*

Piston Ring End Gap

- Place the piston ring [A] inside the cylinder, using the piston to locate the ring squarely in place. Set it close to the bottom of the cylinder, where cylinder wear is low.
- Measure the gap [B] between the ends of the ring with a thickness gauge.

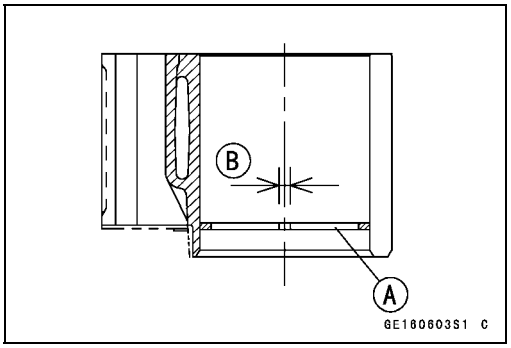

Piston Ring End Gap

	Standard	Service Limit
Top	**0.12 ~ 0.22 mm (0.0047 ~ 0.0087 in.)**	**0.5 mm (0.020 in.)**
Second	**0.30 ~ 0.45 mm (0.0118 ~ 0.0177 in.)**	**0.75 mm (0.031 in.)**

★If the end gap of either ring is greater than the service limit, replace all the rings.

Throttle Valve Holder

Throttle Valve Holder Installation

- Be sure to install the O-rings [A].
- Tighten:

Torque - Throttle Body Assembly Holder Bolts [B]: 12 N·m (1.2 kgf·m, 104 in·lb)

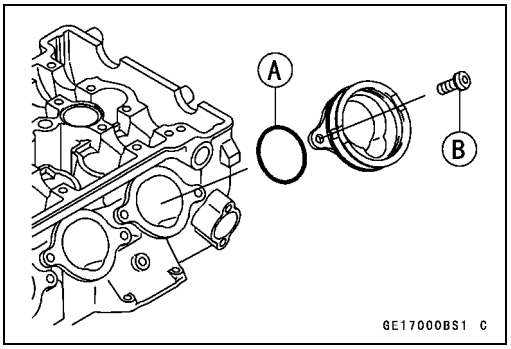

Muffler

⚠ WARNING

To avoid a serious burn, do not remove the mufflers when the engine is still hot. Wait until the mufflers cool down.

Exhaust Pipe Manifold Removal

- Remove:
  Lower Fairings (see Frame chapter)
  Muffler Body (see Muffler Body Removal)
  Radiator [A] (see Cooling System chapter)
  Exhaust Pipe Manifold Holder Nuts [B]
  Exhaust Pipe Manifold [C]

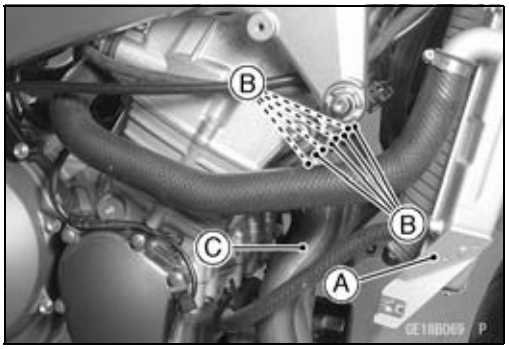

Exhaust Pipe Manifold Installation

- Replace the exhaust pipe manifold gaskets with new ones.
- Tighten:

Torque - Exhaust Pipe Manifold Nut: 17 N·m (1.7 kgf·m, 12 ft·lb)
Exhaust Pipe Clamp Bolt: 17 N·m (1.7 kgf·m, 12 ft·lb)
Muffler Body Bolt: 30 N·m (3.0 kgf·m, 22 ft·lb)

- Thoroughly warm up the engine, wait until the engine cools down, and retighten all the bolts and nuts.

Muffler Body Removal

- Remove the exhaust pipe manifold clamp bolt [A].
- Remove the muffler body mounting nut [B].
- Pull the muffler body backward.

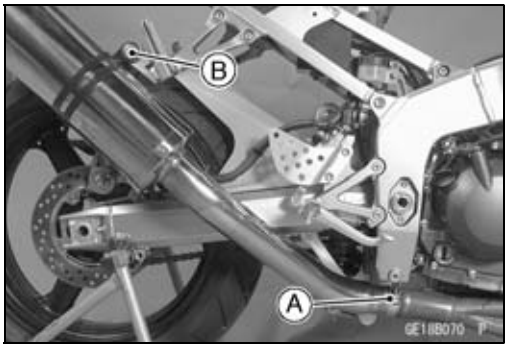

Muffler Body Installation

- Replacing the muffler pipe connection gasket with new one.
- Install the muffler body and exhaust pipe.
- Tighten:

Torque - Exhaust Pipe Manifold Clamp Bolt: 17 N·m (1.7 kgf·m, 12 ft·lb)
Muffler Body Bolt: 30 N·m (3.0 kgf·m, 22 ft·lb)

- Thoroughly warm up the engine, wait until the engine cools down, and retighten all the bolts and nuts.

Clutch

Table of Contents

Exploded View 6-2
Specifications 6-4
Special Tool and Sealant 6-5
Clutch Lever and Cable 6-6
- Lever Free Play Inspection 6-6
- Lever Free Play Adjustment 6-6
- Cable Removal 6-6
- Cable Installation 6-6
- Cable Lubrication 6-6
- Clutch Lever Installation 6-6

Clutch Cover 6-7
- Clutch Cover Removal 6-7
- Clutch Cover Installation 6-7
- Release Shaft Removal 6-7
- Release Shaft Installation 6-7

Clutch 6-8
- Clutch Removal 6-8
- Clutch Installation 6-9
- Clutch Plate Assembly Inspection (ZX636) 6-12
- Clutch Plate Assembly Adjustment (ZX636) 6-12
- Spring Plate Free Play Measurement (ZX600) 6-13
- Spring Plate Play Adjustment (ZX600) 6-14
- Clutch Plate, Wear, Damage Inspection 6-14
- Clutch Plate Warp Inspection 6-14
- Clutch Spring Free Length Measurement 6-15
- Damper Cam Inspection (ZX600) 6-15

Exploded View

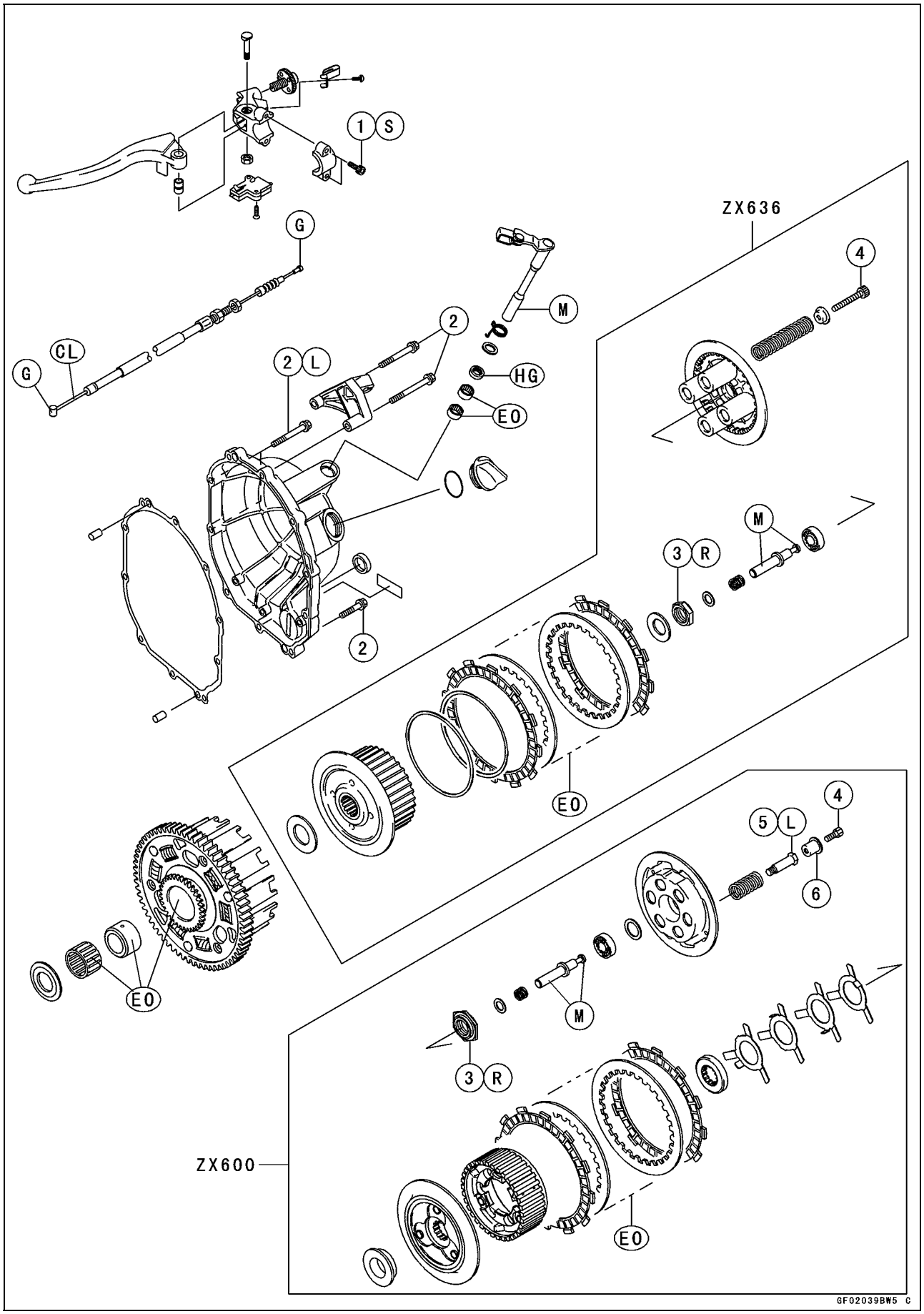

Exploded View

No.	Fastener	Torque			Remarks
		N·m	kgf·m	ft·lb	
1	Clutch lever holder bolts	7.8	0.80	69 in·lb	S
2	Clutch cover bolts	12	1.2	104 in·lb	L (2)
3	Clutch hub nut	130	13.5	98	
4	Clutch spring bolts	8.8	0.90	78 in·lb	
5	Clutch sub hub bolt	25	2.5	18	L

No.	Parts		Parts No.	Remarks
6	Clutch spring holder	STD	39108–1152	Depth 15 mm (0.59 in.)
		OPTION	39108–0001	Depth 14 mm (0.55 in.)
		OPTION	39108–0003	Depth 13 mm (0.51 in.)

CL: Apply cable lubricant.
G: Apply grease.
HG: Apply high-temperature grease.
EO: Apply engine oil.
L: Apply a non-permanent locking agent.
M: Apply molybdenum disulfide grease.
R: Replacement Parts
S: Follow the specific tightening sequence.

Specifications

Item		Standard	Service Limit
Clutch:			
Friction plate thickness		2.72 ~ 2.88 mm (0.107 ~ 0.113 in.)	2.2 mm (0.087 in.)
Friction and steel plate warp		0.2 mm (0.008 in.) or less	0.3 mm (0.012 in.)
Clutch spring free length	ZX636	80.6 mm (3.17 in.)	76.7 mm (3.02 in.)
	ZX600	39.85 mm (1.57 in.)	38.5 mm (1.52 in.)
Clutch plate assembly length	ZX636	37.7 ~ 38.3 mm (1.48 ~ 1.51 in.)	– – –
	ZX600	39.2 mm (1.54 in.)	– – –

Special Tool and Sealant

Clutch Holder:
57001–1243

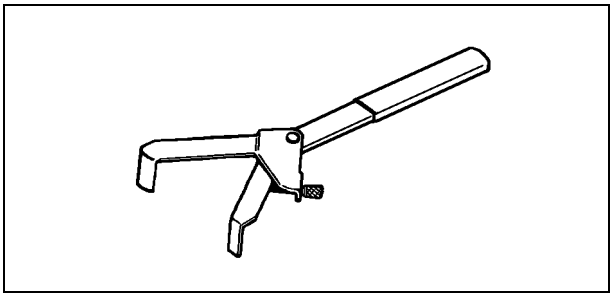

Kawasaki Bond (Silicone Sealant) :
56019–120

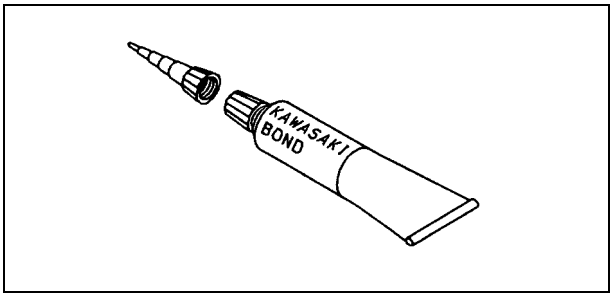

Clutch Lever and Cable

Lever Free Play Inspection

○Refer to the Clutch in the Periodic Maintenance chapter.

Lever Free Play Adjustment

○Refer to the Clutch in the Periodic Maintenance chapter.

Cable Removal

- Remove the right lower fairing (see Frame chapter).
- Slide the dust cover [A] at the clutch cable lower end out of place.
- Loosen the nuts [B], and slide the lower end [C] of the clutch cable to give the cable plenty of play.

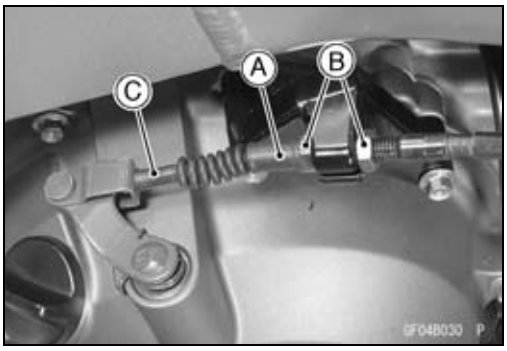

- Screw in the adjuster.
- Line up the slots [A] in the clutch lever [B], and adjuster [C], and then free the cable from the lever.
- Free the clutch inner cable tip from the clutch release lever.
- Push the release lever toward the front of the motorcycle and tape the release lever to the clutch cover to prevent the release shaft from falling out.
- Pull the clutch cable out of the frame.

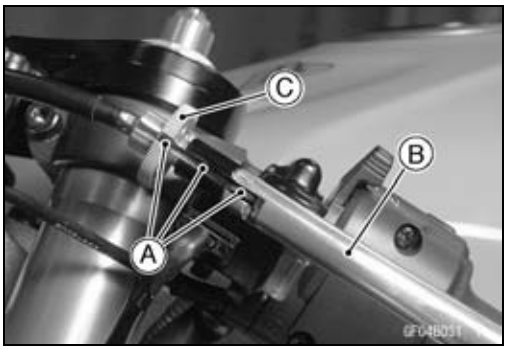

Cable Installation

- Run the clutch cable correctly (see Appendix chapter).
- Adjust the clutch cable (see Clutch in the Periodic Maintenance chapter).

Cable Lubrication

○Refer to the General Lubrication in the Periodic Maintenance chapter.

Clutch Lever Installation

- Install the clutch lever so that the punch mark [A] on the handlebar is aligned with the mating surface [B] of the clutch lever clamp.
- Tighten the upper clamp bolt first, and then the lower clamp bolt. There will be a gap at the lower part of the clamp after tightening.

Torque - Clutch Lever Holder Bolts: 7.8 N·m (0.80 kgf·m, 69 in·lb)

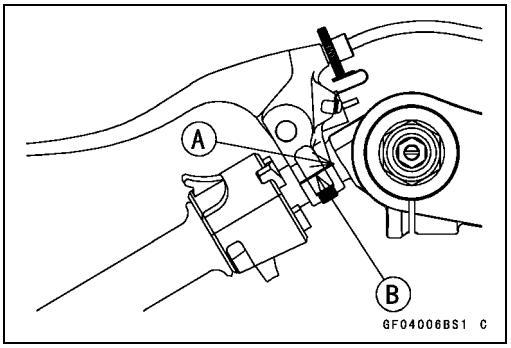

Clutch Cover

Clutch Cover Removal

- Drain the engine oil (see Cooling System in the Periodic Maintenance chapter).
- Remove:
  Right Lower Fairing (see Frame chapter)
  Clutch Cable Lower End [A]
  Clutch Cover Mounting Bolts [B]

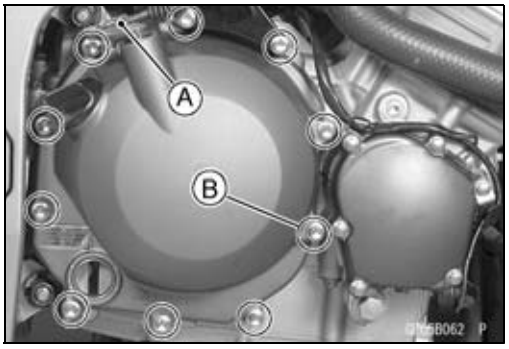

- Turn the release lever [A] toward the rear as shown, and remove the clutch cover [B].
  [C] about 90°

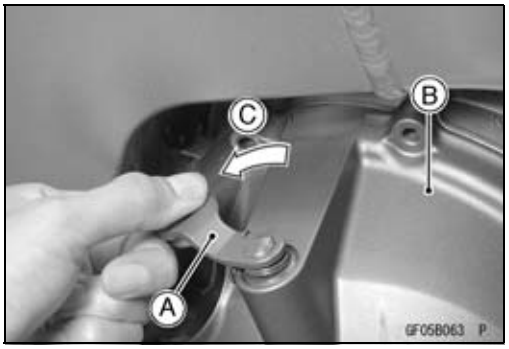

Clutch Cover Installation

- Apply silicone sealant to the area [A] where the mating surface of the crankcase touches the clutch cover gasket.

  Sealant - Kawasaki Bond (Silicone Sealant): 56019–120

- Replace the cover gasket with a new one.
- Apply a non-permanent locking agent to the threads of the two clutch cover bolts [B].
- Tighten the cover bolts.

  Torque - Clutch Cover Bolts: 12 N·m (1.2 kgf·m, 104 in·lb)

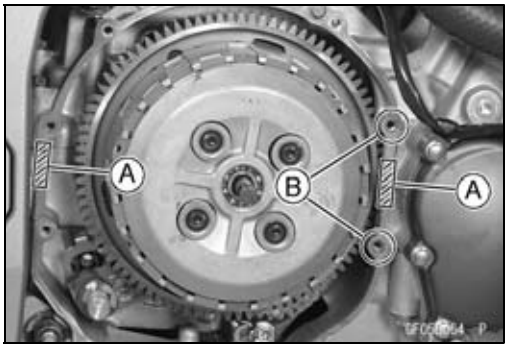

Release Shaft Removal

CAUTION
Do not remove the clutch release lever and shaft assembly unless it is absolutely necessary. If removed, the oil seal replacement may be required.

- Remove the clutch cover (see Clutch Cover Removal).
- Pull the lever and shaft assembly straight out of the clutch cover.

Release Shaft Installation

- Apply high-temperature grease to the oil seal lips on the upper ridge of the clutch cover.
- Apply oil to the bearing in the hole of the clutch cover.
- Insert the release shaft straight into the upper hole of the clutch cover.

CAUTION
When inserting the release shaft, be careful not to remove the spring of the oil seal.

- Apply molybdenum disulfide grease to the pusher-holding portion on the release shaft.

Clutch

Clutch Removal

- Drain the engine oil (see Engine Lubrication System in the Periodic Maintenance chapter).
- Remove:
  Right Lower Fairing (see Frame chapter)
  Clutch Cover (see Clutch Cover Removal)
  Clutch Spring Bolts [A]
  Clutch Spring Holders
  Clutch Springs
  Clutch Spring Plate [B] (with thrust bearing and pusher [C], spring and washer)

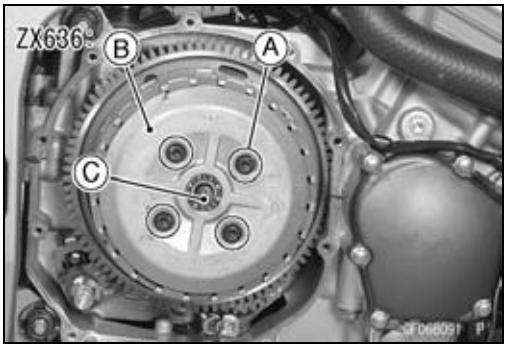

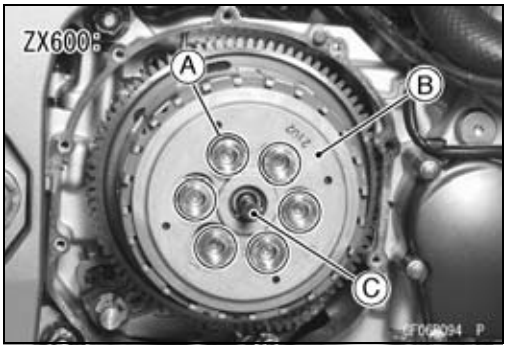

  Friction Plates, Steel Plates
  Spring, Spring Seat (ZX636 only)
  Sub Clutch Hub Bolts [A] (ZX600 only)
  Clutch Hub Nut [B]

○Holding the (sub) clutch hub [C], remove the nut.

Special Tool - Clutch Holder: 57001-1243 [D]

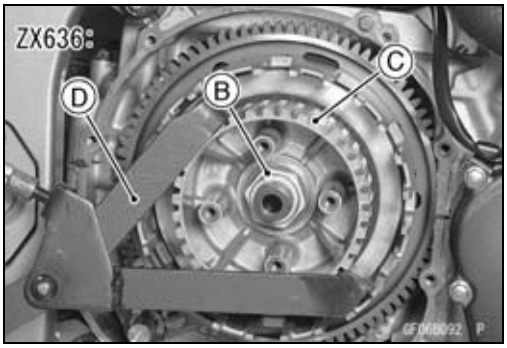

ZX636:

- Remove:
  Washer
  Clutch Hub

ZX600:

- Remove:
  Torque Limiter Springs [E]
  Collar
  Sub Clutch Hub
  Clutch Hub
  Spacer

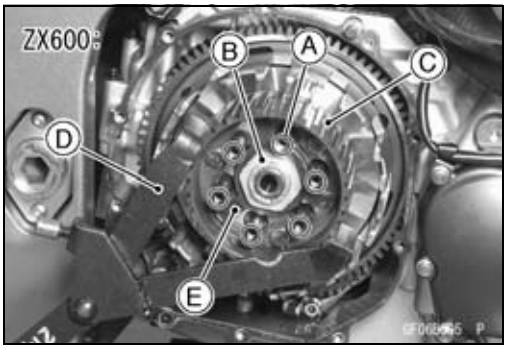

- Using the two 4 mm screws [A], pull out the sleeve [B], needle bearing [C] and clutch housing [D].
- Remove the spacer.

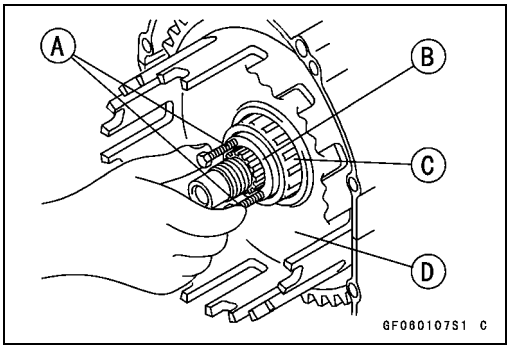

Clutch

Clutch Installation

- Inspect the clutch plate assembly length (see Clutch Plate Assembly Inspection).
- Install the following parts on the drive shaft.
  [A] Spacer
  [B] Sleeve
  [C] Needle Bearing
  [D] Clutch Housing
  [E] Spacer
  [F] Clutch Hub
  [G] Washer
  [H] Nut
  [I] Sub Clutch Hub
  [J] Collar
  [K] Torque Limiter Springs

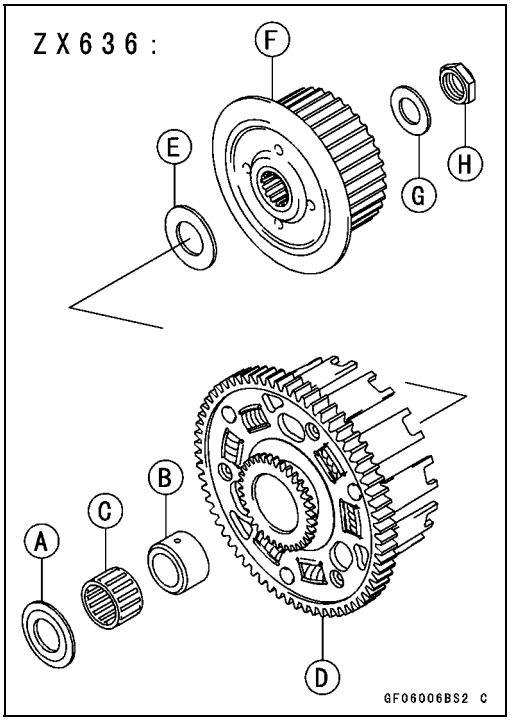

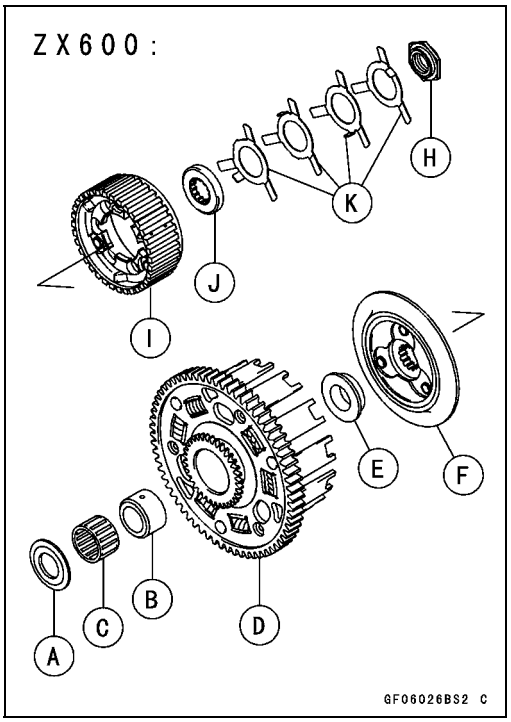

○Install the spacer [A] so that the stepped side [B] faces inward.

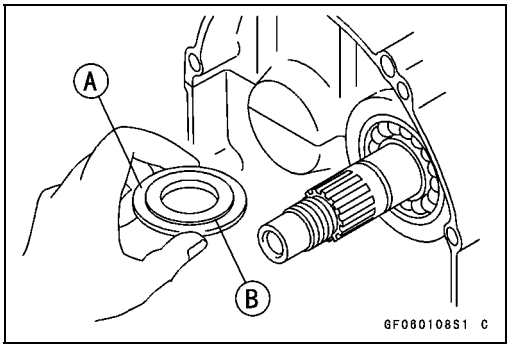

Clutch

ZX636:

○Install the washer [A] so that the OUT SIDE [B] mark faces outward.

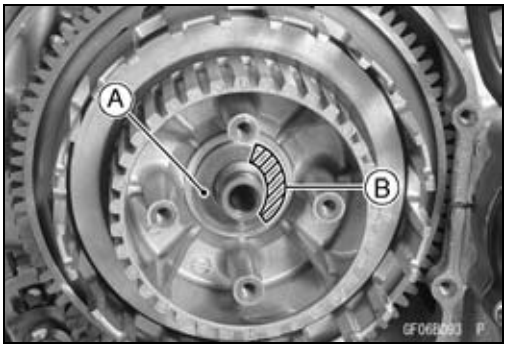

ZX600:

○Install the collar [A] so that the groove [B] faces outward.

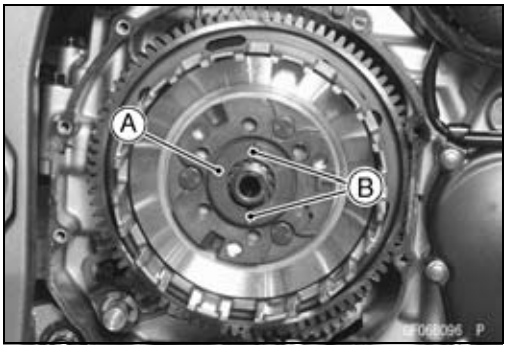

ZX600:

- Pile up the four torque limiter springs [A] so that the spring tongues [B] does not faces same direction in the sub clutch hub [C].
- Apply a non-permanent locking agent to the threads of sub clutch hub bolts.
- Tighten:

  Torque - Sub Clutch Hub Bolts: 25 N·m (2.5 kgf·m, 18 ft·lb)

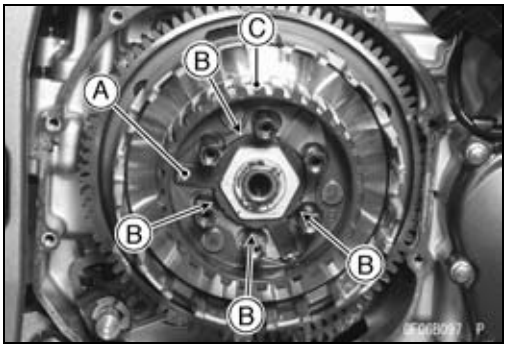

○Replace the clutch hub nut with a new one.

○Holding the clutch hub, tighten the clutch hub nut.

Special Tool - Clutch Holder: 57001-1243

Torque - Clutch Hub Nut: 130 N·m (13.5 kgf·m, 98 ft·lb)

ZX636:

- Install the spring seat [A] and spring [B] as shown.
  [C] Clutch Hub

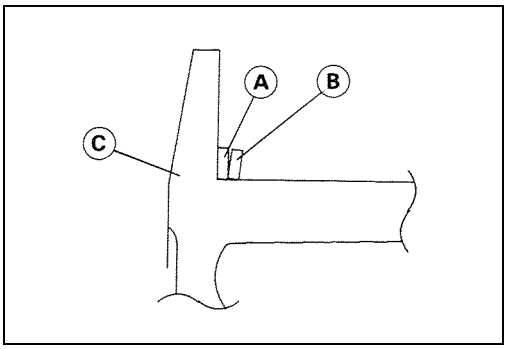

Clutch

- Install the friction plates and steel plates, starting with a friction plate and alternating them.

CAUTION
If new dry friction plates and steel plates are installed, apply engine oil to the surfaces of each plate to avoid clutch plate seizure.

○Install the last friction plate [A] fitting the tangs in the grooves in the housing as shown.

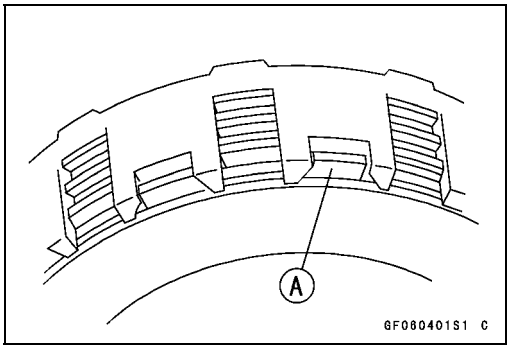

ZX636:

- Apply molybdenum disulfide grease to the pusher end [A] and install the bearing [B], pusher [C] spring [D] and washer [E] in the clutch spring plate [F].

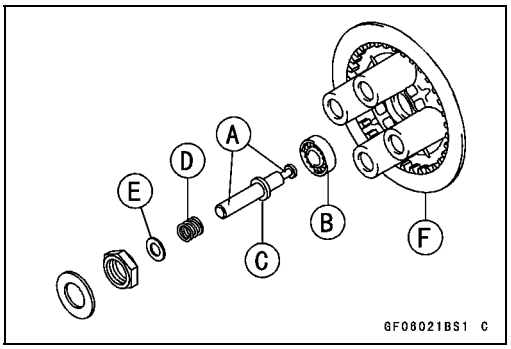

ZX600:

- Apply molybdenum disulfide grease to the pusher end [A] and install the shim [B], bearing [C], pusher [D] and spring [E] in the clutch spring plate [F].

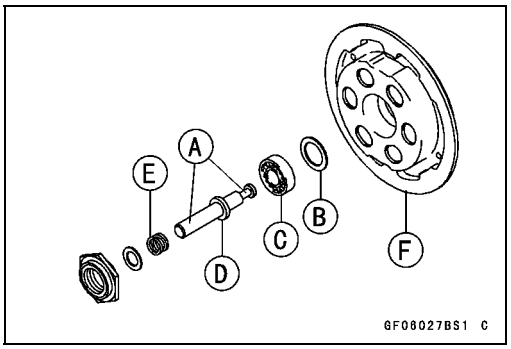

- Install the clutch spring plate, spring and spring holders, and tighten the clutch spring bolts.

  Torque - Clutch Spring Bolts: 8.8 N·m (0.90 kgf·m, 78 in·lb)

- Install the clutch cover (see Clutch Cover Installation).

Clutch

Clutch Plate Assembly Inspection (ZX636)

- Inspect the friction plate thickness (see Clutch Plate, Wear, Damage Inspection).
- Measure the length [A] of the clutch plate assembly as shown.

ZX636:

○Assemble:

Clutch Hub [B]	Spring Plate [G]
Spring Seat [C]	Springs [H]
Spring [D]	Spring Holders [I]
Friction Plate [E]	Spring Bolts [J]
Steel Plate [F]	

Torque - Clutch Spring Bolts: 8.8 N·m (0.90 kgf·m, 78 in·lb)

Clutch Plate Assembly
Standard: 37.7 ~ 38.3 mm (1.48 ~ 1.51 in.)

★If the length is not within the specified range, adjust the length (see Clutch Plate Assembly Adjustment).

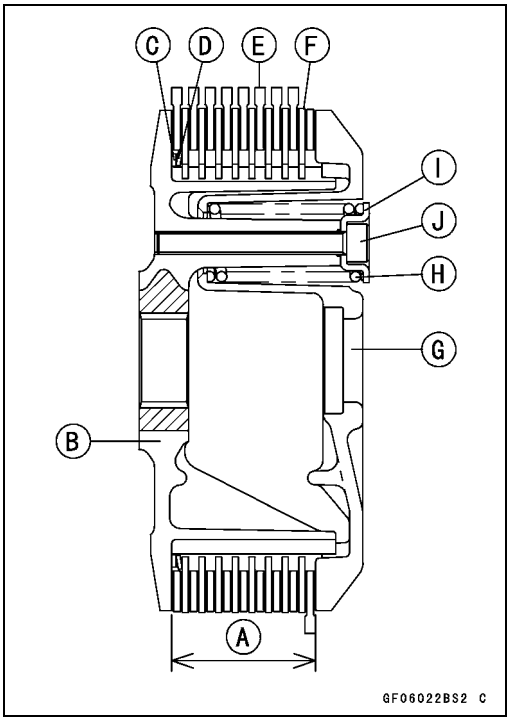

Clutch Plate Assembly Adjustment (ZX636)

- Inspect the clutch plate assembly length, and then replace the steel plate(s) which brings the length within the specified range.

○Remove:
Spring Bolts
Spring Holders
Springs
Spring Plate

○Replace the following steel plate(s).

Part No.	Thickness
13089–1126	1.4 mm (0.055 in.)
13089–013	1.6 mm (0.063 in.) (STD)
13089–1073	2.0 mm (0.079 in.)

NOTE

○*Do not use the steel plate of 1.4 mm (0.055 in.) and 2.0 mm (0.0079 in.) thickness at the same time.*

- Install the removed parts, and inspect the clutch plate assembly length.

Torque - Clutch Spring Bolts: 8.8 N·m (0.90 kgf·m, 78 in·lb)

Clutch

Spring Plate Free Play Measurement (ZX600)

Insufficient clutch free play will cause the engine braking effect to be more sudden, resulting in rear wheel hop. On the other hand, if the free play is excessive, the clutch lever may feel “spongy” or pulsate when pulled.

- Hold an extra drive shaft in a vise and install the following clutch parts on the shaft.
  [A] Spacer
  [B] Needle Bearing
  [C] Bushing
  [D] Clutch Housing
  [E] Spacer
  [F] Clutch Hub
  [G] Sub Clutch Hub
  [H] Friction Plates
  [I] Steel Plates
  [J] Spring Plate

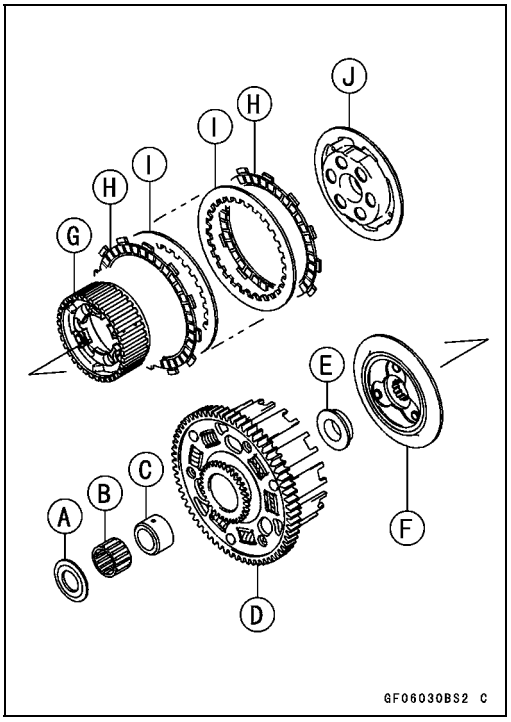

- Engage the cam followers (Clutch Hub) with the cams (Sub Clutch Hub).
- To measure the free play, set a dial gauge [A] against the raised center [B] of the clutch spring plate.
- Move the clutch housing gear back and forth [C]. The difference between the highest and lowest gauge readings is the amount of free play.
  [D] Drive Shaft
- Measure the spring plate free play (see Spring Plate Free Play Measurement).

Spring Plate Free Play
Usable range: 0.05 ~ 0.35 mm (0.002 ~ 0.014 in.)

★If the free play is not within the usable range, change all of the friction plate.

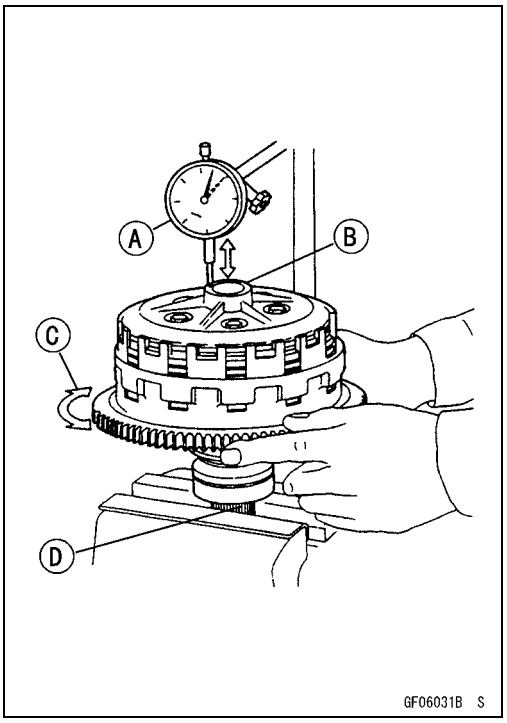

Clutch

Spring Plate Play Adjustment (ZX600)

○Apply a non permanent locking agent to the thread of sub clutch hub bolts.

- Assemble the following parts so that the clutch plate assembly length [A] is specified length.

Clutch Hub [B]	Spring Plate [G]
Sub Clutch Hub [C]	Springs [H]
Sub Clutch Hub Bolts[D]	Spring Holders [I]
Friction Plate [E]	Spring Bolts [J]
Steel Plate [F]	

○Replace the following steel plate(s).

Part No.	Thickness
13089–1126	1.4 mm (0.055 in.)
13089–013	1.6 mm (0.063 in.) (STD)
13089–1073	2.0 mm (0.079 in.)

NOTE

○Do not use the steel plate of 1.4 mm (0.055 in.) and 2.0 mm (0.079 in.) thickness at the same time.

Torque - Sub Clutch Hub Bolts: 25 N·m (2.5 kgf·m, 18 ft·lb)
Clutch Spring Bolts: 8.8 N·m (0.90 kgf·m, 78 in·lb)

Clutch Plate Assembly
Standard: 39.2 mm (1.54 in.)

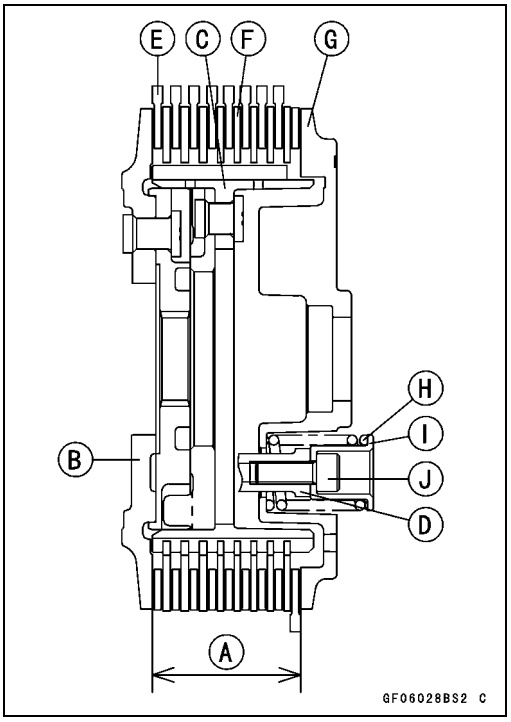

Clutch Plate, Wear, Damage Inspection

- Visually inspect the friction and steel plates for signs of seizure, overheating (discoloration), or uneven wear.
- Measure the thickness of each friction plate [A] at several points.

★If any plates show signs of damage, or if they have worn past the service limit, replace them with new ones.

Friction Plate Thickness
Standard: 2.72 ~ 2.88 mm (0.107 ~ 0.113 in.)
Service Limit: 2.2 mm (0.087 in.)

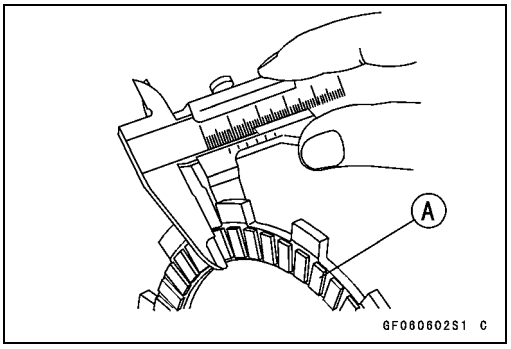

Clutch Plate Warp Inspection

- Place each friction plate or steel plate on a surface plate and measure the gap between the surface plate [A] and each friction plate or steel plate [B] with a thickness gauge [C]. The gap is the amount of friction or steel plate warp.

★If any plate is warped over the service limit, replace it with a new one.

Friction and Steel Plate Warp
Standard: 0.2 mm (0.008 in.) or less
Service Limit: 0.3 mm (0.012 in.)

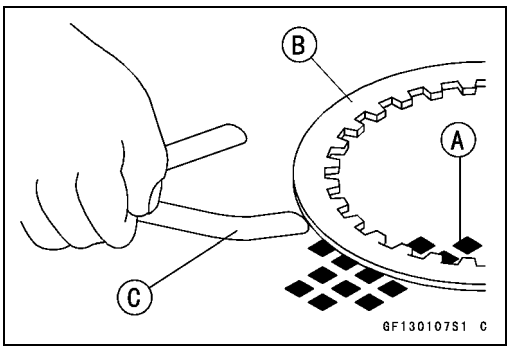

Clutch

Clutch Spring Free Length Measurement

- Measure the free length of the clutch springs [A].

★If any spring is shorter than the service limit, it must be replaced.

Clutch Spring Free Length

Standard:	**ZX636**	**80.6 mm (3.17 in.)**
	ZX600	**39.85 mm (1.57 in.)**
Service Limit:	**ZX636**	**76.7 mm (3.02 in.)**
	ZX600	**38.5 mm (1.52 in.)**

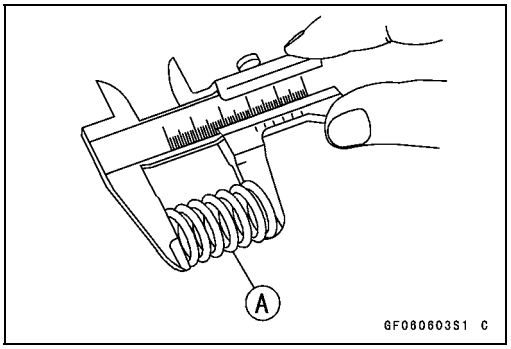

Damper Cam Inspection (ZX600)

- Remove the clutch (see Clutch Removal).
- Visually inspect the damper cam [A], cam follower [B], and the torque limiter spring [C].
- Replace the part if it appears damaged.

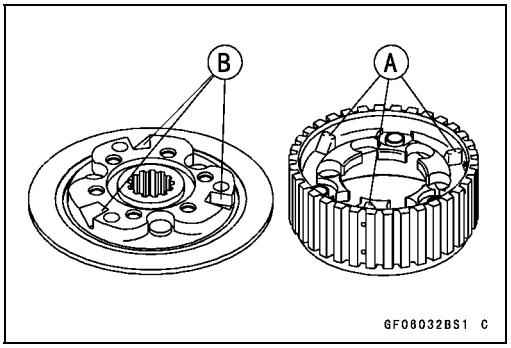

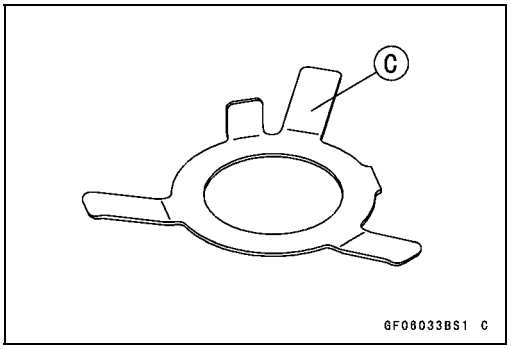

Engine Lubrication System

Table of Contents

Exploded View 7-2
Engine Oil Flow Chart 7-4
Specifications 7-5
Special Tools and Sealant 7-6
Engine Oil and Oil Filter 7-7
- Oil Level Inspection 7-7
- Engine Oil Change 7-7
- Oil Filter Replacement 7-7

Oil Pan 7-8
- Oil Pan Removal 7-8
- Oil Pan Installation 7-8

Oil Pressure Relief Valve 7-9
- Oil Pressure Relief Valve Removal 7-9
- Oil Pressure Relief Valve Installation 7-9
- Oil Pressure Relief Valve Inspection 7-9

Oil Pump 7-10
- Oil Pump Removal 7-10
- Oil Pump Installation 7-10
- Oil Pump Drive Gear Removal 7-11
- Oil Pump Drive Gear Installation 7-11

Oil Cooler 7-12
- Oil Cooler Removal 7-12
- Oil Cooler Installation 7-12

Oil Pressure Measurement 7-13
- Oil Pressure Measurement 7-13

Oil Pressure Switch 7-14
- Oil Pressure Switch Removal 7-14
- Oil Pressure Switch Installation 7-14

Exploded View

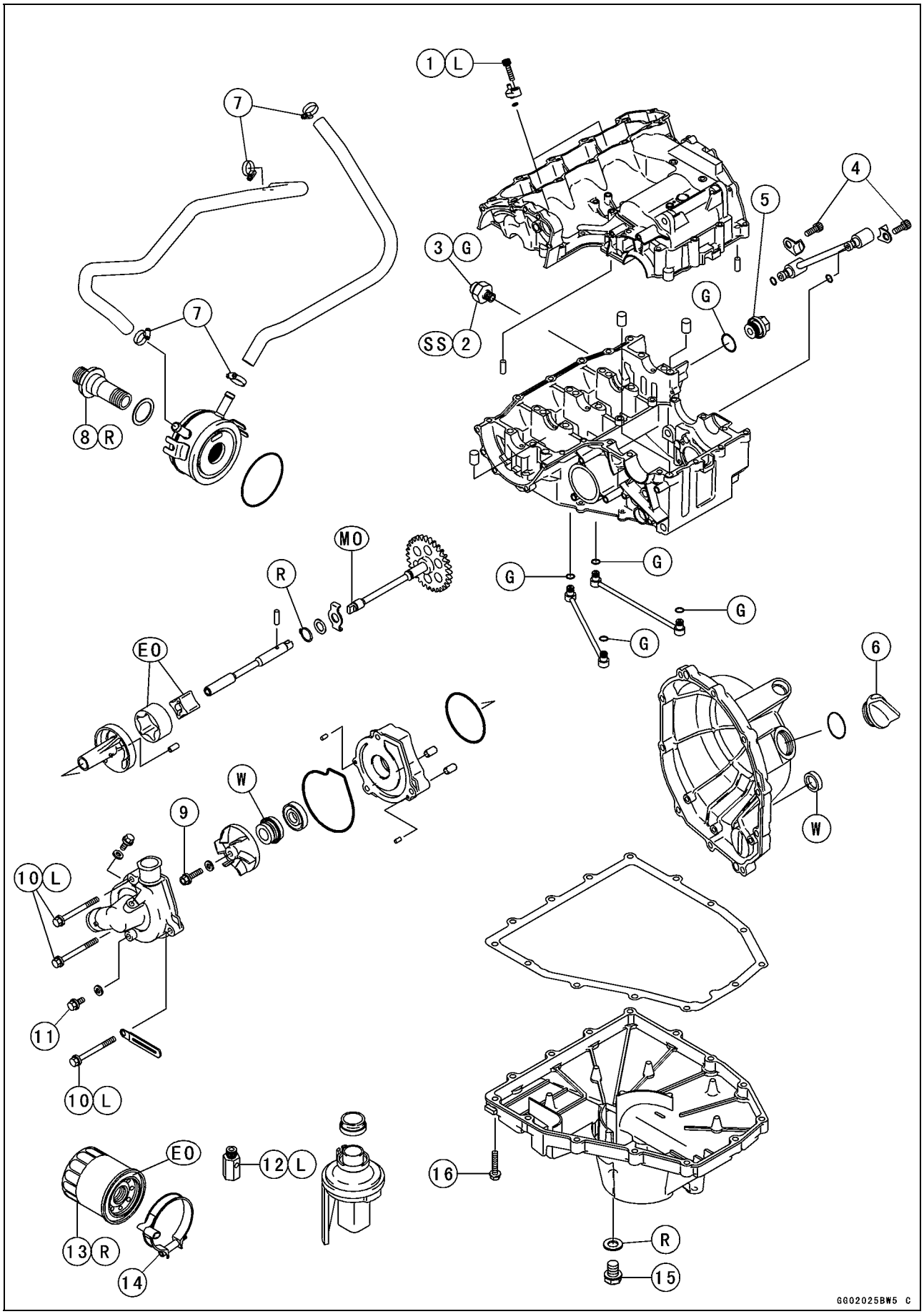

Exploded View

No.	Fastener	Torque			Remarks
		N·m	kgf·m	ft·lb	
1	Oil jet nozzle bolts	6.9	0.70	61 in·lb	L
2	Oil pressure switch	15	1.5	11	SS
3	Oil pressure switch terminal bolt	1.5	0.15	13 in·lb	G
4	Oil pipe holder bolts	12	1.2	104 in·lb	
5	Oil passage plug	15	1.5	11	
6	Oil filler plug	1.5	0.15	13 in·lb	
7	Cooling hose clamp	2	0.20	17 in·lb	
8	Oil cooler bolt	78	8.0	58	R
9	Impeller bolt	9.8	1.0	87 in·lb	
10	Water pump cover bolts	12	1.2	104 in·lb	L
11	Coolant drain plug	9.8	1.0	87 in·lb	
12	Oil pressure relief valve	15	1.5	11	L
13	Oil filter	31	3.2	23	R,EO
14	Oil filter clamp bolt	5.9	0.60	52 in·lb	
15	Engine drain plug	29	3.0	22	
16	Oil pan bolts	9.8	1.0	87 in·lb	

SS: Apply silicone sealant.
L: Apply a non-permanent locking agent.
R: Replacement Parts
G: Apply grease.
EO: Apply engine oil.
W: Apply water.
MO: Apply molybdenum disulfide oil solution.

Engine Oil Flow Chart

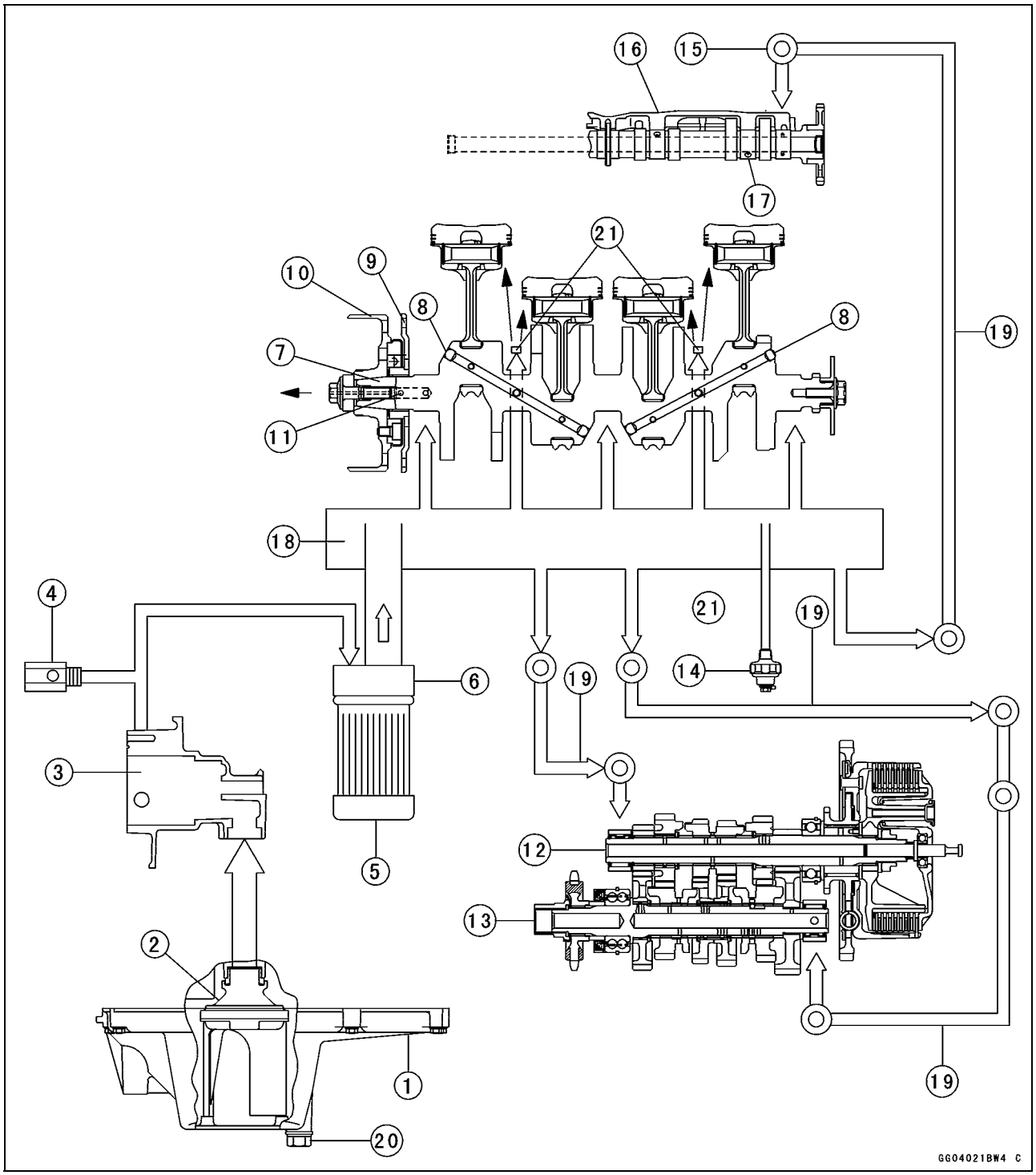

1. Oil Pan
2. Oil Screen
3. Oil Pump
4. Relief Valve
5. Oil Filter
6. Oil Cooler
7. Crankshaft
8. To Connecting Rod Journals
9. Starter Clutch Gear
10. Alternator Rotor
11. Starter Clutch Oil Passage Hole
12. Drive Shaft
13. Output Shaft
14. Oil Pressure Switch
15. Cylinder Head
16. Camshaft Cap
17. Camshaft
18. Oil Passage
19. Oil Pipe
20. Oil Drain Plug
21. Oil Jet Nozzles

Specifications

Item	Standard
Engine Oil:	
Type	API SE, SF or SG
	API SH or SJ with JASO MA
Viscosity	SAE 10W-40
Capacity	3.4 L (3.6 US qt, when filter is not removed)
	3.6 L (3.8 US qt, when filter is removed)
	4.0 L (4.2 US qt, when engine is completely dry)
Level	Between upper and lower level lines
Oil Pressure Measurement:	
Oil pressure @4 000 r/min (rpm), oil temp. 90°C (194°F)	140 ~ 200 kPa (1.4 ~ 2.0 kgf/cm², 207 ~ 29 psi)

Special Tools and Sealant

Outside Circlip Pliers:
57001–144

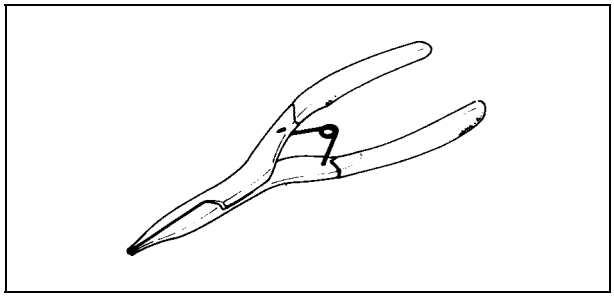

Oil Pressure Gauge, 10 kgf/cm²:
57001–164

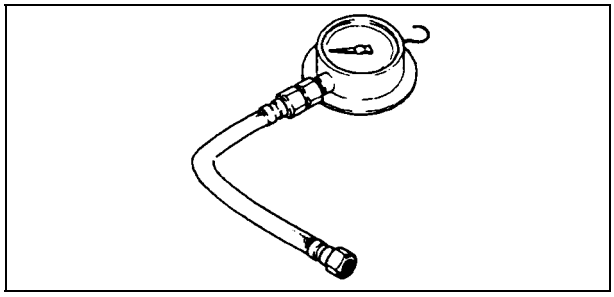

Oil Filter Wrench:
57001–1249

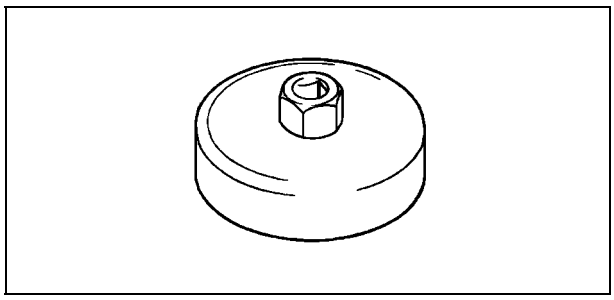

Oil Pressure Gauge Adapter, M18 × 1.5:
57001–1278

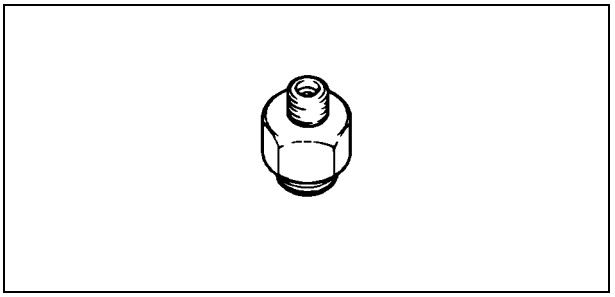

Kawasaki Bond (Silicone Sealant):
56019–120

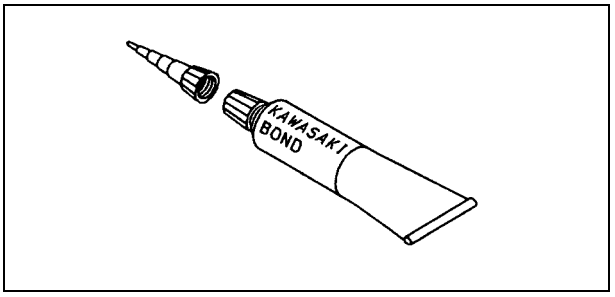

Engine Oil and Oil Filter

⚠ WARNING

Motorcycle operation with insufficient, deteriorated, or contaminated engine oil will cause accelerated wear and may result in engine or transmission seizure, accident, and injury.

Oil Level Inspection

- Check that the engine oil level is between the upper [A] and lower [B] levels in the gauge.

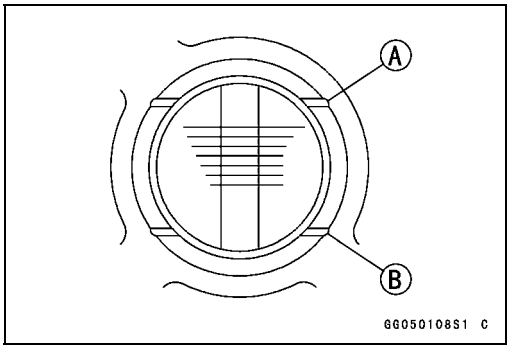

NOTE

○*Situate the motorcycle so that it is perpendicular to the ground.*

○*If the motorcycle has just been used, wait several minutes for all the oil to drain down.*

○*If the oil has just been changed, start the engine and run it for several minutes at idle speed. This fills the oil filter with oil. Stop the engine, then wait several minutes until the oil settles.*

CAUTION

Racing the engine before the oil reaches every part can cause engine seizure.
If the engine oil gets extremely low or if the oil pump or oil passages clog up or otherwise do not function properly, the oil pressure warning light will light. If this light stays on when the engine is running above idle speed, stop the engine immediately and find the cause.

Engine Oil Change

○Refer to the Engine Lubrication System in the Periodic Maintenance chapter.

Oil Filter Replacement

○Refer to the Engine Lubrication System in the Periodic Maintenance chapter.

Oil Pan

Oil Pan Removal

- Drain the Engine Oil (see Engine Lubrication System in the Periodic Maintenance chapter).
- Remove:
  Muffler (see Engine Top End chapter)
  Oil Pan Bolts [A]
  Oil Pan [B]

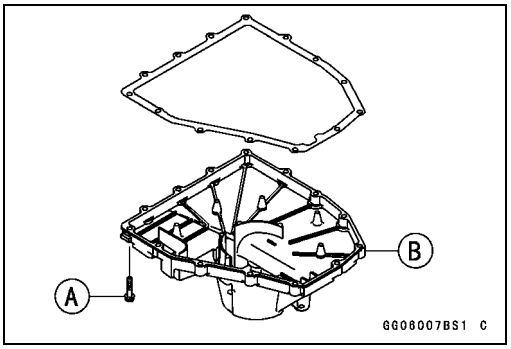

Oil Pan Installation

- Clean the oil screen [A].
- Install the oil screen so that the crankcase rib [B] fits the slot [C] of the oil screen.

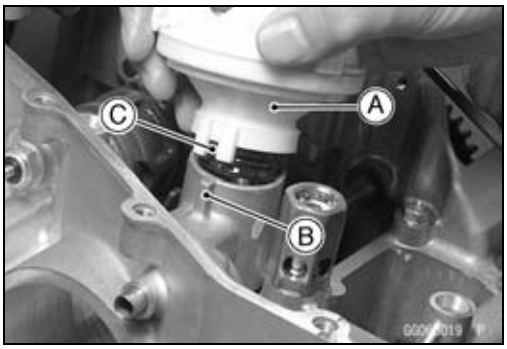

- Apply grease to the O-rings on the oil pipes [A].

★If the relief valve was removed, install it.

○Apply a non-permanent locking agent to the threads of the relief valve [B], and tighten it.

Torque - Oil Pressure Relief Valve: 15 N·m (1.5 kgf·m, 11 ft·lb)

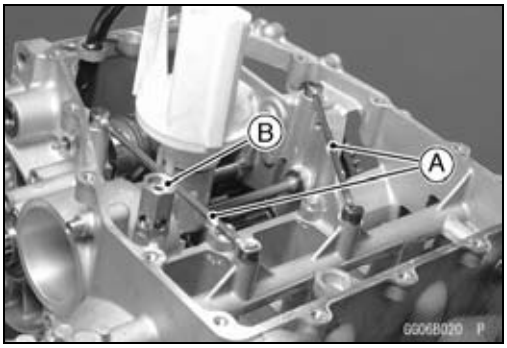

CAUTION
Do not apply too much non-permanent locking agent to the threads. This may block the oil passage.

- Replace the oil pan gasket with a new one.
- Tighten:

Torque - Oil Pan Bolts: 9.8 N·m (1.0 kgf·m, 87 in·lb)

Oil Pressure Relief Valve

Oil Pressure Relief Valve Removal

- See Oil Pan Removal.

Oil Pressure Relief Valve Installation

- See Oil Pan Installation.

Oil Pressure Relief Valve Inspection

- Check to see if the valve [A] slides smoothly when pushing it in with a wooden or other soft rod, and see if it comes back to its seat by spring [B] pressure.

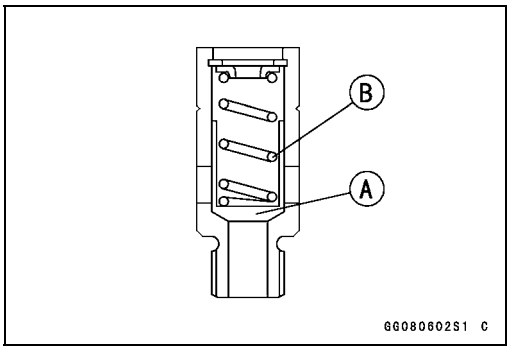

NOTE

○*Inspect the valve in its assembled state. Disassembly and assembly may change the valve performance.*

★If any rough spots are found during above inspection, wash the valve clean with a high-flash point solvent and blow out any foreign particles that may be in the valve with compressed air.

⚠ WARNING

Clean the relief valve in a well-ventilated area, and take care that there is no spark or flame anywhere near the working area. Because of the danger of highly flammable liquids, do not use gasoline or low -flash point solvent.

★If cleaning does not solve the problem, replace the relief valve as an assembly. The relief valve is precision made with no allowance for replacement of individual parts.

Oil Pump

Oil Pump Removal

- Drain:
  Coolant (see Cooling System in the Periodic Maintenance chapter)
  Engine Oil (see Engine Lubrication System in the Periodic Maintenance chapter)
- Remove:
  Water Hoses [A]
  Bolts [B] and Water Pump Cover [C]

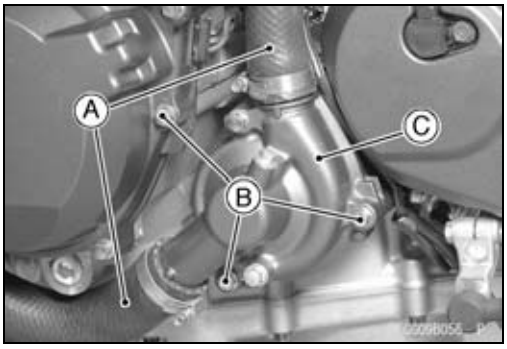

Impeller Bolt [A]
Impeller [B]

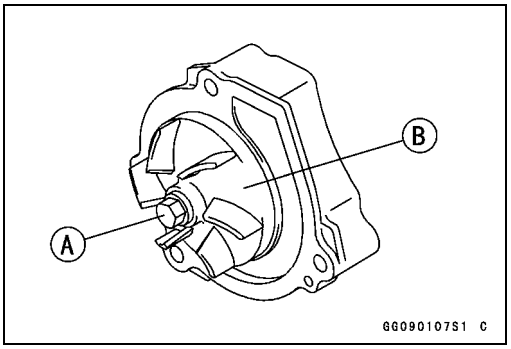

Water Pump Body [A]
Oil Pump Cover [B]
Oil (Water) Pump Shaft [C]
Outer Rotor [D] and Inner Rotor [E]

NOTE

○*The oil (water) pump assembly can easily be removed by installing water pump cover bolt [F] into the oil (water) pump shaft and pulling them.*

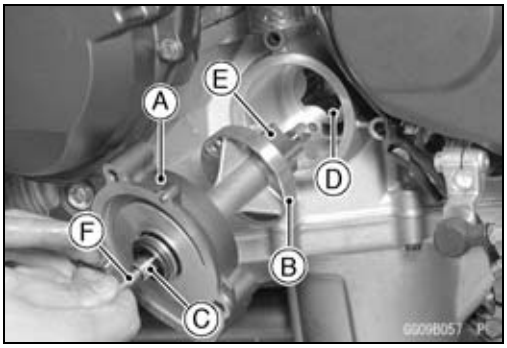

Oil Pump Installation

- Install the outer rotor [A] in to the crankcase.
- Install the pin [B], inner rotor [C] and oil (water) pump shaft [D].

○Turn the pump shaft so that the slot [E] in its shaft fits onto the projection [F] of the pump drive gear shaft.

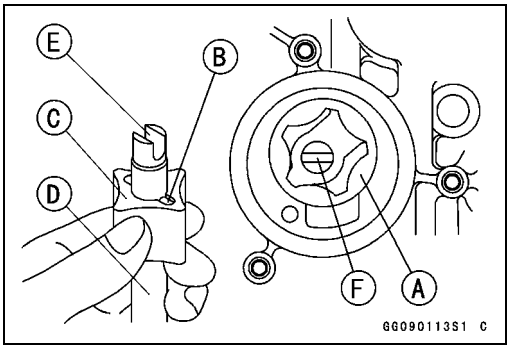

- Fit the pin [A] of the oil pump cover [B] into the hole [C] in the crankcase.

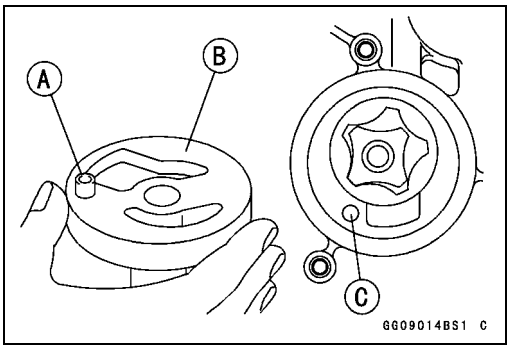

Oil Pump

- Install:
  Pins [A]
  Water Pump Body [B]

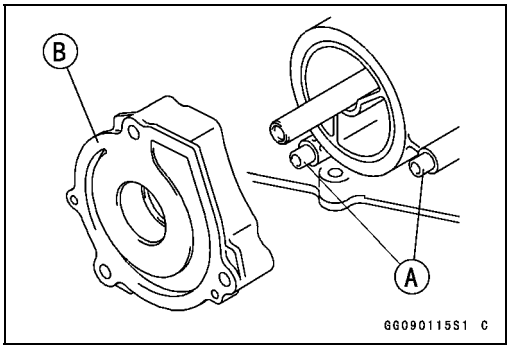

- Apply coolant to the surface of the rubber seal on the impeller.
- Install the impeller [A] and bolt [B].

Torque - Impeller Bolt: 9.8 N·m (1.0 kgf·m, 87 in·lb)

Pins [C]
Water Pump Cover [D]

- Apply a non-permanent locking agent to the threads of the water pump cover bolts, and tighten them.

Torque - Water Pump Cover Bolts: 12 N·m (1.2 kgf·m, 104 in·lb)

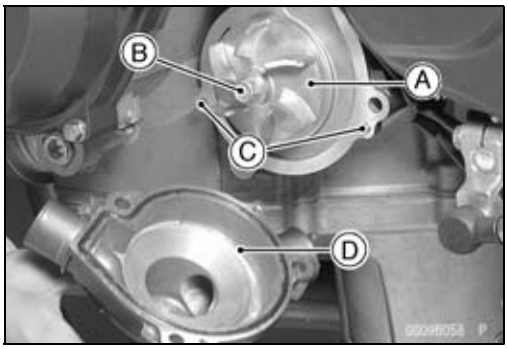

Oil Pump Drive Gear Removal

- Remove:
  Clutch (see Clutch chapter)
  Oil Pan (see Oil Pan Removal)
  Circlip [A] and Washer [B]

Special Tool - Circlip Pliers: 57001–144

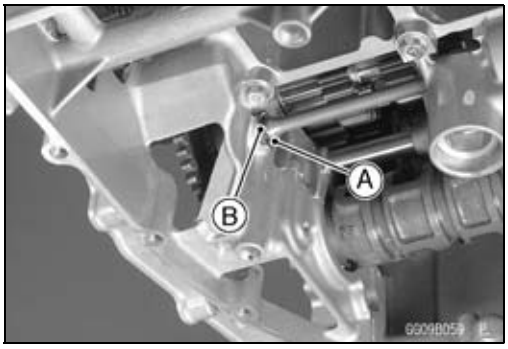

- Pull the oil pump drive gear [A].

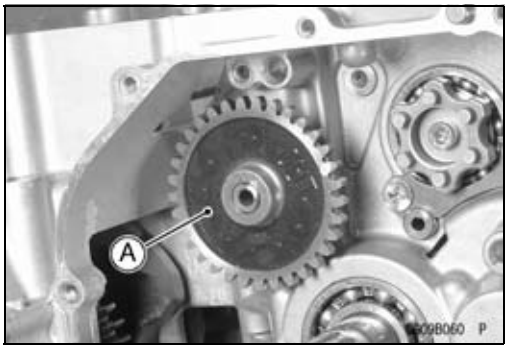

Oil Pump Drive Gear Installation

- Install the circlip [A] into the groove [B] of the oil pump drive gear shaft.

Special Tool - Circlip Pliers: 57001–144

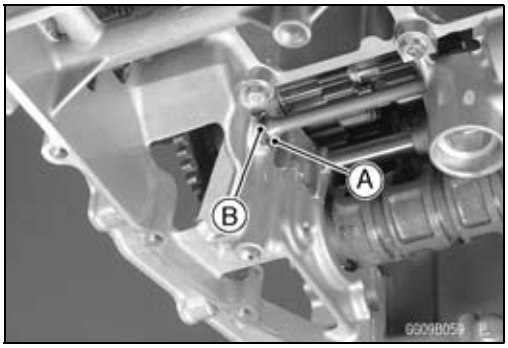

Oil Cooler

Oil Cooler Removal

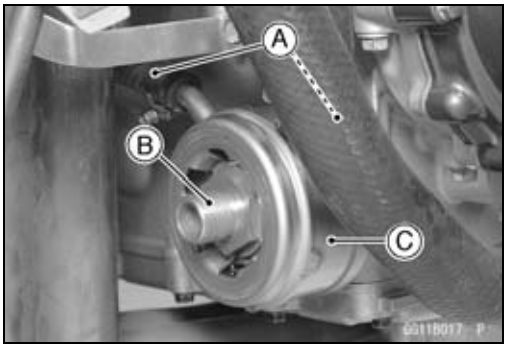

- Remove:
  Lower Fairing (see Frame chapter)
- Drain:
  Engine Oil (see Engine Lubrication System in the Periodic Maintenance chapter)
  Coolant (see Cooling System in the Periodic Maintenance chapter)
- Remove the oil filter (see Engine Lubrication System in the Periodic Maintenance chapter).
- Remove the oil cooler hoses [A] from the oil cooler.
- Unscrew the oil cooler bolt [B] from the crankcase, and remove the oil cooler [C].

Oil Cooler Installation

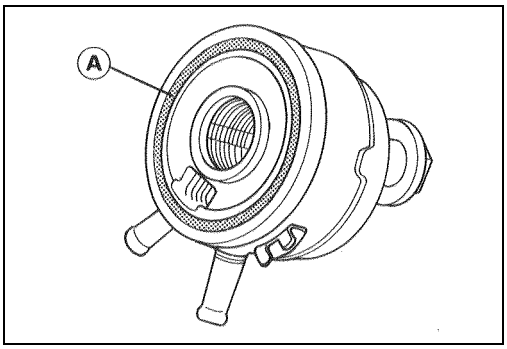

- Replace the oil cooler bolt with a new one.
- Clean off any oil or dirt on internal threads of oil cooler bolt in crankcase.
- Apply grease to the O-ring [A] before installation.

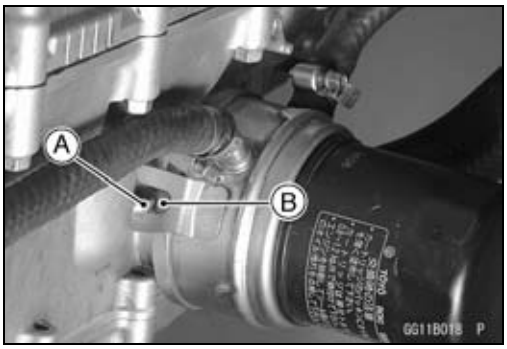

- Install the oil cooler so that the crankcase rib [A] fits the slot [B] of the oil cooler plate.
- Tighten:

  Torque - Oil Cooler Bolt: 78 N·m (8.0 kgf·m, 58 ft·lb)
- Pour:
  Engine Oil (see Engine Lubrication System in the Periodic Maintenance chapter)
  Coolant (see Cooling System chapter)

Oil Pressure Measurement

Oil Pressure Measurement

- Remove the lower fairing (see Frame chapter).
- Remove the oil passage plug, and attach the gauge [A] and adapter [B] to the plug hole.

Special Tools - Oil Pressure Gauge, 10 kgf/cm²: 57001-164
Oil Pressure Gauge Adapter, M18 × 1.5: 57001-1278

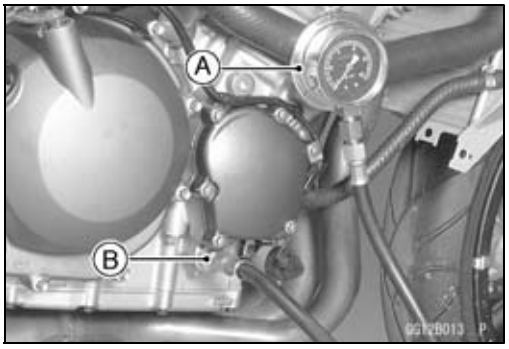

- Start the engine and warm up the engine.
- Run the engine at the specified speed, and read the oil pressure gauge.

★If the oil pressure is much lower than the standard, check the oil pump, oil pump relief valve, and/or crankshaft bearing insert wear immediately.

★If the reading is much higher than the standard, check the oil passage for clogging.

Oil Pressure
Standard: 140 ~ 200 kPa (1.4 ~ 2.0 kgf/cm², 20 ~ 29 psi) @4 000 r/min (rpm), oil temp. 90°C (194 °F)

- Stop the engine.
- Remove the oil pressure gauge and adapter.

⚠ WARNING

Take care against burns form hot engine oil that will drain through the oil passage when the gauge adapter is removed.

- Install the oil passage plug.

Torque - Oil Passage Plug (Right): 15 N·m (1.5 kgf·m, 11 ft·lb)

Oil Pressure Switch

Oil Pressure Switch Removal

- Drain the engine oil (see Engine Lubrication System in the Periodic Maintenance chapter).
- Remove:
  Right Lower Fairing (see Frame chapter)
  Switch Cover [A]
  Switch Terminal [B]
  Oil Pressure Switch [C]

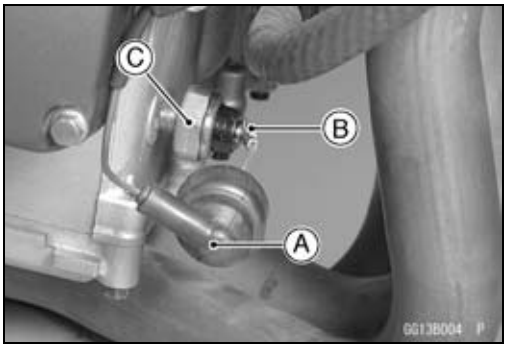

Oil Pressure Switch Installation

- Apply silicone sealant to the threads of the oil pressure switch and tighten it.

  Sealant - Kawasaki Bond (Silicone Sealant): 56019-120

  Torque - Oil Pressure Switch: 15 N·m (1.5 kgf·m, 11 ft·lb)
- Tighten:

  Torque - Oil Pressure Switch Terminal Bolt: 1.5 N·m (0.15 kgf·m, 13 in·lb)
- Apply grease to the terminal.

Engine Removal/Installation

Table of Contents

Exploded View 8-2
Special Tools 8-4
Engine Removal/Installation 8-5
Engine Removal 8-5
Engine Installation 8-7

Exploded View

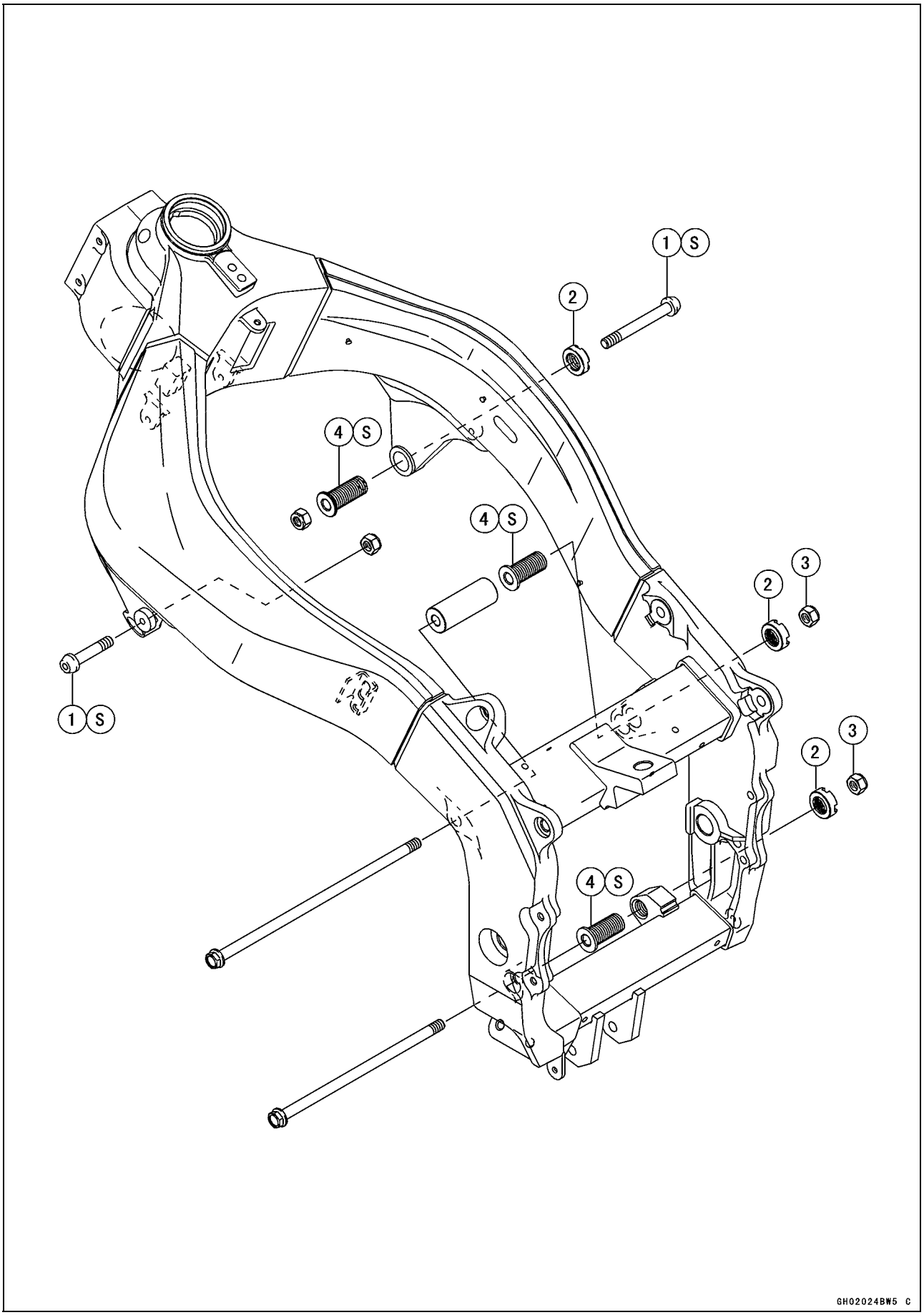

Exploded View

No.	Fastener	Torque			Remarks
		N·m	kgf·m	ft·lb	
1	Engine mounting bolts	44	4.5	33	S
2	Engine mounting locknuts	49	5.0	36	
3	Engine mounting nuts	44	4.5	33	
4	Engine mounting adjusting bolts	20	2.0	14	S

Special Tools

Jack:
57001–1238

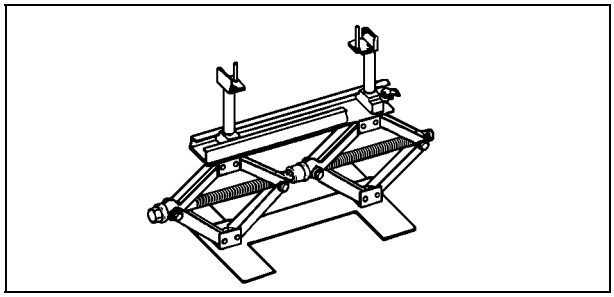

Engine Mount Nut Wrench:
57001–1450

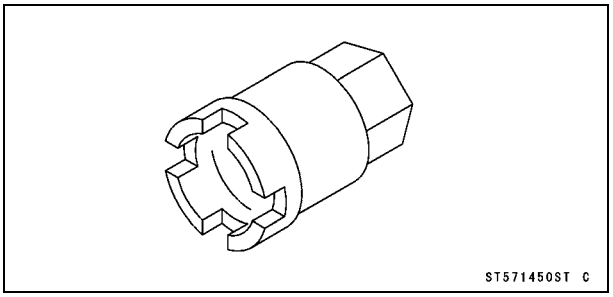

Engine Removal/Installation

Engine Removal

- Squeeze the brake lever slowly and hold it with a band [A].

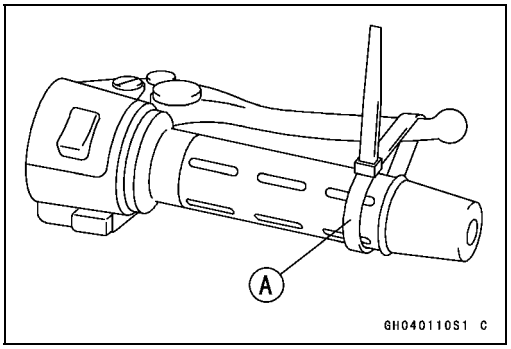

⚠ WARNING

Be sure to hold the front brake when removing the engine, or the motorcycle may fall over. It could cause an accident and injury.

CAUTION

Be sure to hold the front brake when removing the engine, or the motorcycle may fall over. The engine or the motorcycle could be damaged.

- Drain:
  Engine Oil (see Engine Lubrication System in the Periodic Maintenance chapter)
  Coolant (see Cooling System in the Periodic Maintenance chapter)
- Remove:
  Lower Fairings (see Frame chapter)
  Fuel Tank (see Fuel System (DFI) chapter)
  Air Cleaner Housing (see Fuel System (DFI) chapter)
  Throttle Body Assembly (see Fuel System (DFI) chapter)

  Radiator [A] (see Cooling System chapter)
  Clutch Cable Lower End [B] (see Clutch chapter)
  Muffler [C] (see Engine Top End chapter)

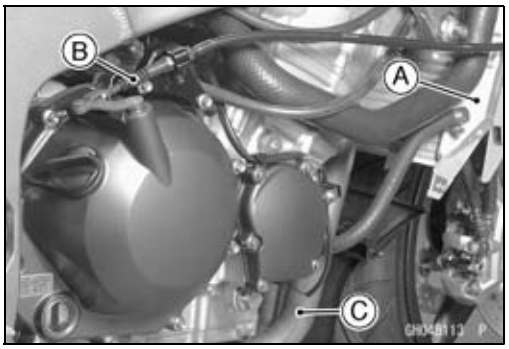

  Shift Pedal [A]
  Reserve Tank [B]
  Speed Sensor [C]
  Engine Sprocket (see Final Drive chapter)

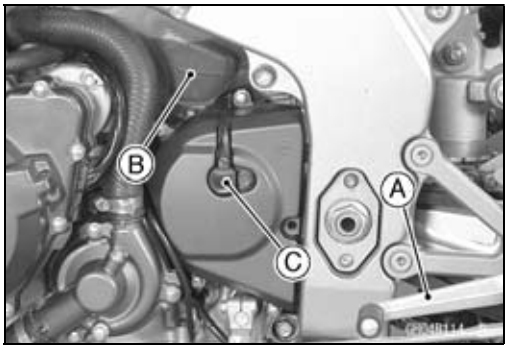

Engine Removal/Installation

- Pull off the connectors from the engine and free the wiring from the clamps.
  Pickup Coil Lead Connector [A]
  Battery Ground Lead [B]
  Starter Motor Lead [C]
  Alternator Lead Connector [D]
  Side Stand Switch Lead Connector [E]
  Speed Sensor Connector [F]
  Regulator/Rectifier Lead Connector [G]

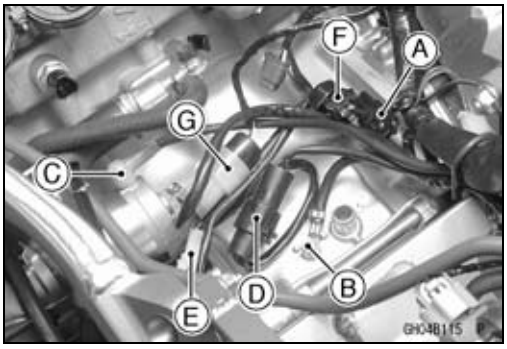

Stick Coil Harness Connector [A]

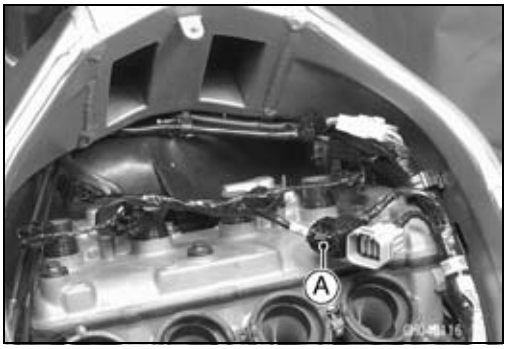

- Support the rear part of the frame on the jack.
  Special Tool - Jack: 57001-1238

- Remove:
  Water Hoses [A]

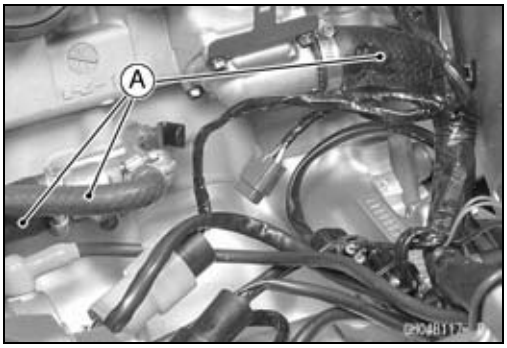

- Support the engine with a suitable stand [A].
- Remove the engine mounting bolts and nuts [B].
- Loosen the locknuts and adjusting bolts [C].
  Special Tool - Engine Mount Nut Wrench: 57001–1450
- Remove the drive chain from the output shaft.
- Using the stand, take out the engine.

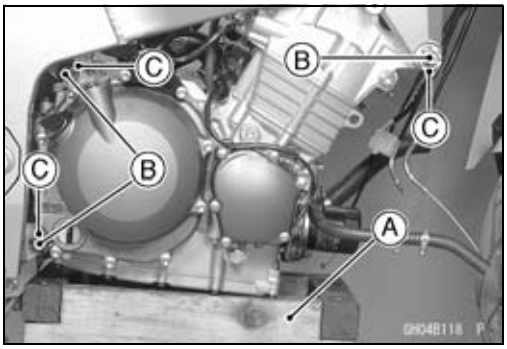

Engine Removal/Installation

Engine Installation

- Support the engine with a suitable stand.
- Hang the drive chain over the output shaft just before moving the engine into its final position in the frame.
- Screw the adjusting bolts [A], [B], [C] into the frame.
- Insert the lower mounting bolt [D] from the left side.
- Insert the upper mounting bolts [E] and [F] from the left and right side individually.
- Set the collar [G] and insert the middle mounting bolts [H] from the left side.

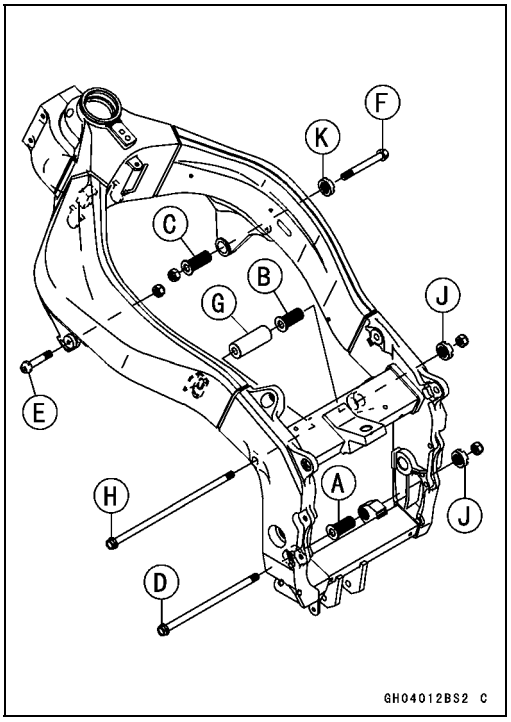

Engine Removal/Installation

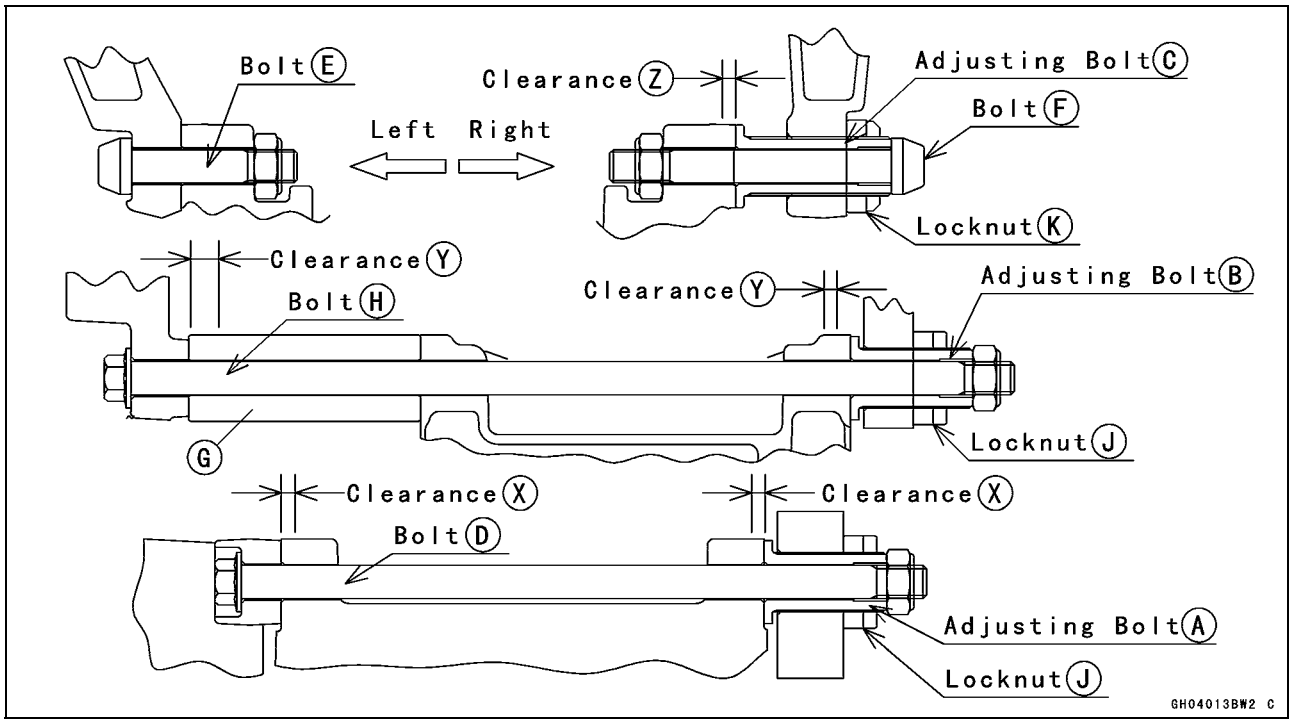

- Turn the adjusting bolt [A], [B] until the clearance [X], [Y] between the crankcase and frame come to zero mm (zero in.).

  Torque - Engine Mounting Adjusting Bolt: 20 N·m (2.0 kgf·m, 14 ft·lb)

- Tighten the engine mounting bolts [E], [D], [H] with specified torque.

○Tightening order is engine mounting bolts [E], [H] to [D].

  Torque - Engine Mounting Bolts: 44 N·m (4.5 kgf·m, 33 ft·lb)

- Pull out the engine mounting bolt [F] temporarily, and turn the adjusting bolt [C] until the clearance [Z] between the adjusting bolt and cylinder come to zero mm (zero in.) by hand.
- Insert the bolt [F] into engine mounting hole, and tighten the bolt and locknut [K], [J] with specified torque

  Torque - Engine Mounting Bolts: 44 N·m (4.5 kgf·m, 33 ft·lb)
  Engine Mounting Locknut: 49 N·m (5.0 kgf·m, 36 ft·lb)

  Special Tool - Engine Mount Nut Wrench: 57001–1450

- Run the leads, cables and hoses correctly (see Cable, Wire and Hose Routing section in Appendix chapter).
- Install the removed parts (see appropriate chapters).
- Adjust:
  Throttle Cables (see Fuel System (DFI) in the Periodic Maintenance chapter)
  Choke Cable (see Fuel System (DFI) chapter)
  Clutch Cable (see Clutch chapter)
  Drive Chain (see Final Drive in the Periodic Maintenance chapter)
- Fill the engine with engine oil (see Engine Lubrication System in the Periodic Maintenance chapter).
- Fill the engine with coolant and bleed the air from the cooling system (see Cooling System in the Periodic Maintenance chapter).

Crankshaft / Transmission

Table of Contents

Exploded View 9-2
Specifications 9-6
Special Tools and Sealant 9-8
Crankcase Splitting 9-9
- Crankcase Splitting 9-9
- Crankcase Assembly 9-9

Crankshaft and Connecting Rods 9-12
- Crankshaft Removal 9-12
- Crankshaft Installation 9-12
- Connecting Rod Removal 9-12
- Connecting Rod Installation 9-12
- Crankshaft/Connecting Rod Cleaning 9-16
- Connecting Rod Bend 9-16
- Connecting Rod Twist 9-16
- Connecting Rod Big End Side Clearance 9-16
- Connecting Rod Big End Bearing Insert/Crankpin Wear 9-17
- Crankshaft Side Clearance 9-18
- Crankshaft Runout 9-19
- Crankshaft Main Bearing Insert/Journal Wear 9-19

Starter Motor Clutch 9-21
- Starter Motor Clutch Removal/Installation 9-21
- Starter Motor Clutch Inspection 9-21
- Starter Motor Clutch Disassembly 9-21
- Starter Motor Clutch Assembly 9-21

Transmission 9-22
- Shift Pedal Removal 9-22
- Shift Pedal Installation 9-22
- External Shift Mechanism Removal 9-22
- External Shift Mechanism Installation 9-22
- External Shift Mechanism Inspection 9-23
- Transmission Shaft Removal 9-23
- Transmission Shaft Installation 9-23
- Transmission Shaft Disassembly 9-24
- Transmission Shaft Assembly 9-24
- Shift Drum and Fork Removal 9-26
- Shift Drum and Fork Installation 9-26
- Shift Drum Disassembly 9-26
- Shift Drum Assembly 9-27
- Shift Fork Bending 9-27
- Shift Fork/Gear Groove Wear 9-27
- Shift Fork Guide Pin/Drum Groove Wear 9-28
- Gear Dog and Gear Dog Hole Damage 9-28

Exploded View

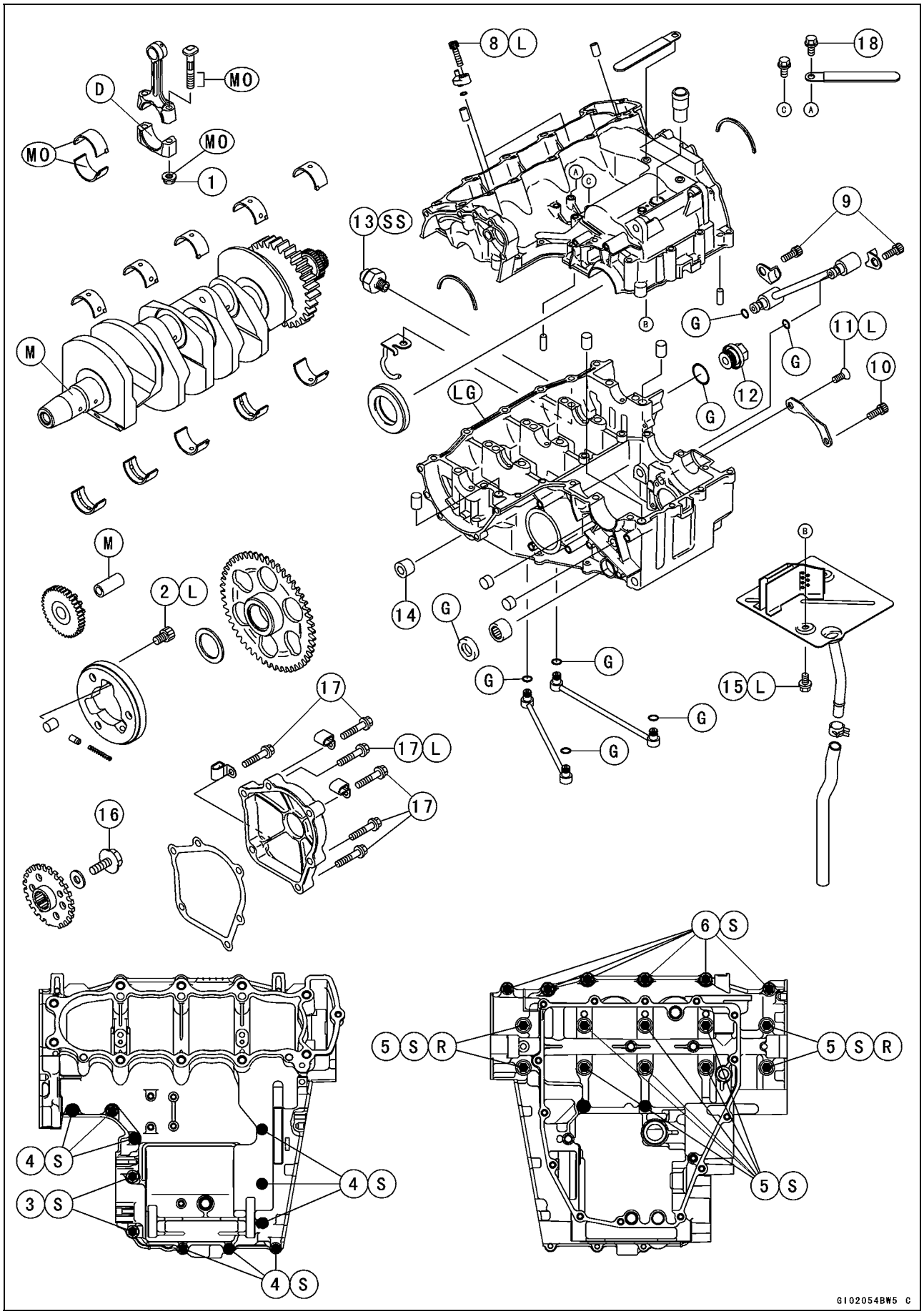

Exploded View

No.	Fastener	Torque			Remarks
		N·m	kgf·m	ft·lb	
1	Connecting rod big end nuts	See the text			
2	Starter motor clutch bolts	33	3.4	24	L
3	Upper crankcase bolts (7 mm)	20	2.0	14.5	S
4	Upper crankcase bolts (6 mm)	12	1.2	104 in·lb	S
5	Lower crankcase bolts (7 mm)	24	2.4	18	S
6	Lower crankcase bolts (7 mm)	27	2.8	20	S
7	Lower crankcase bolts (6 mm)	12	1.2	104 in·lb	S
8	Oil jet nozzle bolts	6.9	0.70	61 in·lb	L
9	Oil pipe holder bolt	12	1.2	104 in·lb	
10	Shift drum bearing holder bolt	12	1.2	104 in·lb	
11	Shift drum bearing holder screw	4.9	0.50	43 in·lb	L
12	Oil passage plug (Right)	15	1.5	11	
13	Oil pressure switch	15	1.5	11	SS
14	Oil passage plug (Left)	20	2.0	14.5	L
15	Breather plate bolts	9.8	1.0	87 in·lb	L
16	Timing rotor bolts	44	4.5	33	
17	Crankshaft sensor cover bolts	9.8	1.0	87 in·lb	L (1)
18	Harness clamp bolt	8.8	0.90	78 in·lb	L

D: Do not apply any grease or oil.
G: Apply grease.
L: Apply a non-permanent locking agent.
M: Apply molybdenum disulfide grease.
SS: Apply silicone sealant.
LG: Apply liquid gasket (Kawasaki Bond: 92104–1064).
MO: Apply molybdenum disulfide oil solution.
R: Replacement Parts
S: Follow the specific tightening sequence.

Exploded View

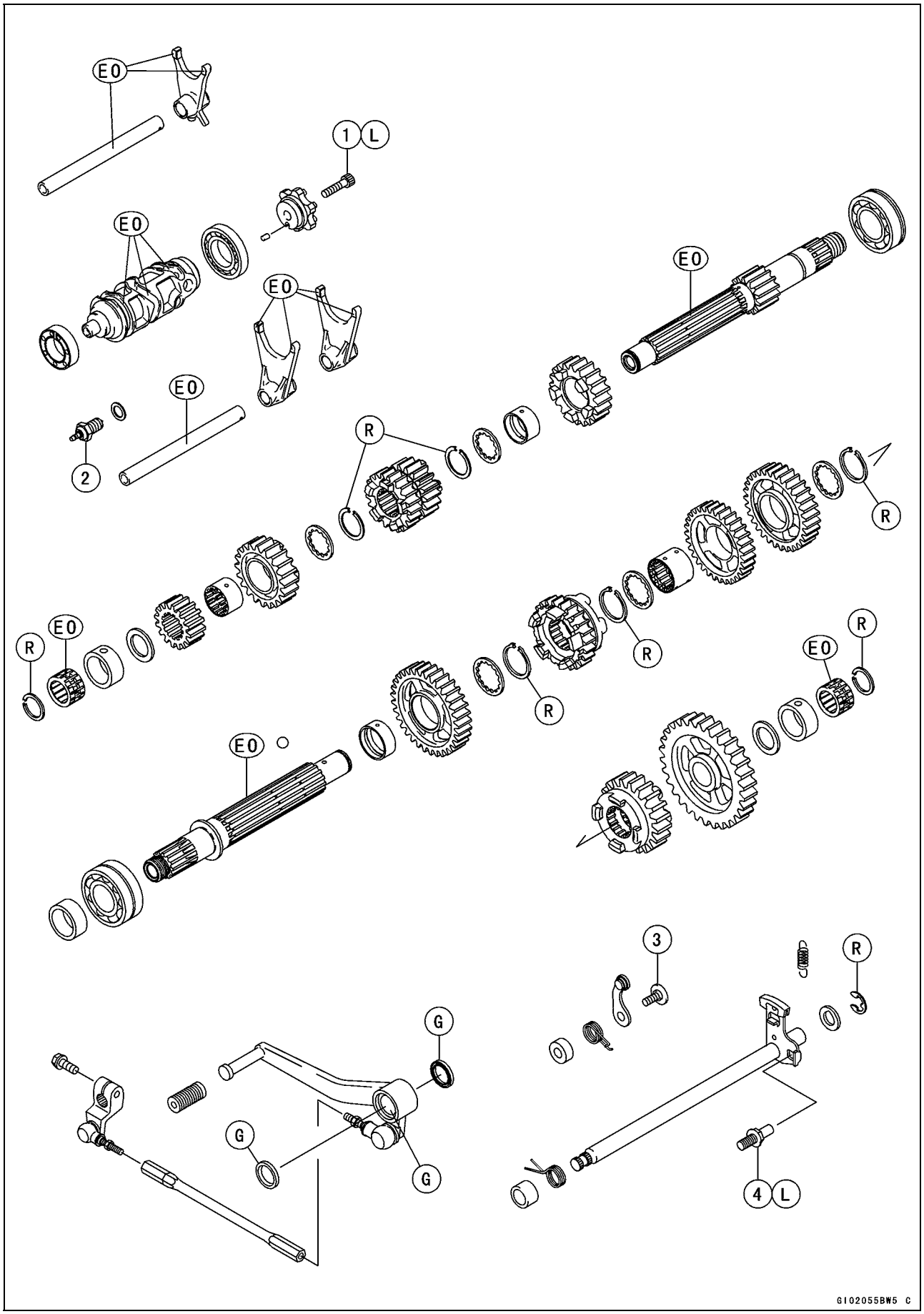

Exploded View

No.	Fastener	Torque			Remarks
		N·m	kgf·m	ft·lb	
1	Shift drum cam holder bolt	12	1.2	104 in·lb	L
2	Neutral switch	15	1.5	11	
3	Gear positioning lever bolt	9.8	1.0	87 in·lb	
4	Shift shaft return spring pin	28	2.9	21	L

G: Apply grease.
L: Apply a non-permanent locking agent.
EO: Apply engine oil.
R: Replacement Parts

Specifications

Item		Standard	Service Limit
Crankshaft, Connecting Rods:			
Connecting rod big end side clearance		0.13 ~ 0.33 mm (0.0051 ~ 0.00130 in.)	0.5 mm (0.020 in.)
Connecting rod big end bearing insert/ crankpin clearance		0.035 ~ 0.064 mm (0.0014 ~ 0.0025 in.)	0.10 mm (0.004 in.)
Crankpin diameter:		29.984 ~ 30.000 mm (1.1805 ~ 1.1811 in.)	29.97 mm (1.18 in.)
Marking	None	29.984 ~ 29.994 mm (1.1805 ~ 1.1809 in.)	– – –
	○	29.995 ~ 30.000 mm (1.1809 ~1.1811 in.)	– – –
Connecting rod big end bore diameter:		33.000 ~ 33.016 mm (1.2992 ~ 1.2998 in.)	– – –
Marking	None	33.000 ~ 33.008 mm (1.2992 ~ 1.2995 in.)	– – –
	○	33.009 ~ 33.016 mm (1.2996 ~ 1.2998 in.)	– – –
Connecting rod big end bearing insert thickness:			
	Pink	1.475 ~ 1.480 mm (0.0581 ~ 0.0583 in.)	– – –
	Brown	1.480 ~ 1.485 mm (0.0583 ~ 0.0585 in.)	– – –
	Black	1.485 ~ 1.490 mm (0.0585 ~ 0.0587 in.)	– – –

Connecting rod big end bearing insert selection:

Con-rod Big End Bore Diameter Marking	Crankpin Diameter Marking	Bearing Insert	
		Size Color	Part Number
None	○	Pink	92028-1880
None	None	Brown	92028-1879
○	○		
○	None	Black	92028-1878

Crankshaft side clearance		0.05 ~ 0.15 mm (0.002 ~ 0.006 in.)	0.35 mm (0.014 in.)
Crankshaft runout		TIR 0.02 mm (0.0008 in.) or less	TIR 0.05 mm (0.002 in.)
Crankshaft main bearing insert/journal clearance		0.031 ~ 0.059 mm (0.0012 ~ 0.0023 in.)	0.10 mm (0.0039 in.)
Crankshaft main journal diameter:		29.984 ~ 30.000 mm (1.1805 ~ 1.1811 in.)	29.96 mm (1.18 in.)
Marking	None	29.984 ~ 29.994 mm (1.1805 ~ 1.1809 in.)	– – –
	1	29.995 ~ 30.000 mm (1.1809 ~ 1.1811 in.)	– – –

Specifications

Item	Standard	Service Limit
Crankcase main bearing bore diameter:	33.000 ~ 33.016 mm (1.2992 ~ 1.2998 in.)	– – –
Marking ○	33.000 ~ 33.008 mm (1.2992 ~ 1.2995 in.)	– – –
None	33.009 ~ 33.016 mm (1.2996 ~ 1.2998 in.)	– – –
Crankshaft main bearing insert thickness:		
Brown	1.491 ~ 1.495 mm (0.0587 ~ 0.0589 in.)	– – –
Black	1.495 ~ 1.499 mm (0.0589 ~ 0.0590 in.)	– – –
Blue	1.499 ~ 1.503 mm (0.0590 ~ 0.0592 in.)	– – –

Crankshaft main bearing insert selection:

Crankcase Main Bearing Bore Diameter Marking	Crankshaft Main Journal Diameter Marking	Bearing Insert*		
		Size Color	Part Number	Journal Nos.
○	1	Brown	92028-1883	3, 5
			92028-1886	1, 2, 4
None	1	Black	92028-1882	3, 5
○	None		92028-1885	1, 2, 4
None	None	Blue	92028-1881	3, 5
			92028-1884	1, 2, 4

*The bearing inserts for Nos. 1, 2 and 4 journals have an oil groove, respectively.

Transmission:		
Shift fork ear thickness	5.9 ~ 6.0 mm (0.232 ~ 0.236 in.)	5.8 mm (0.228 in.)
Gear groove width	6.05 ~ 6.15 mm (0.238 ~ 0.242 in.)	6.25 mm (0.246 in.)
Shift fork guide pin diameter	5.9 ~ 6.0 mm (0.232 ~ 0.236 in.)	5.8 mm (0.228 in.)
Shift drum groove width	6.05 ~ 6.20 mm (0.238 ~ 0.244 in.)	6.3 mm (0.248 in.)

Special Tools and Sealant

Bearing Puller:
57001–135

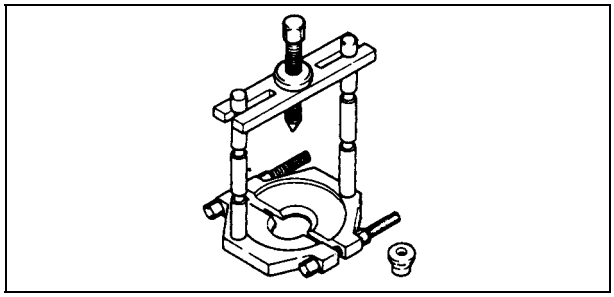

Flywheel & Pulley Holder:
57001–1343

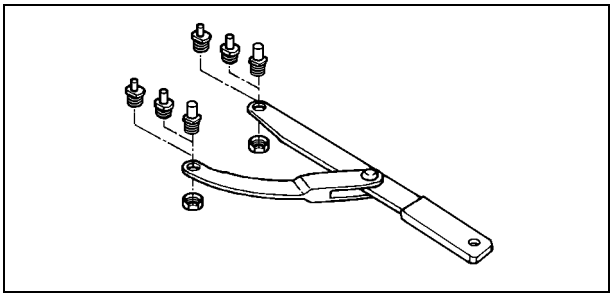

Outside Circlip Pliers:
57001–144

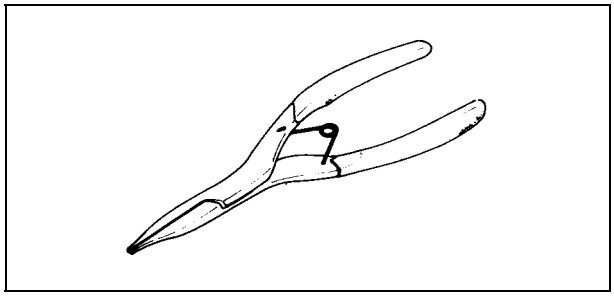

Kawasaki Bond (Liquid Gasket – gray):
92104–1064

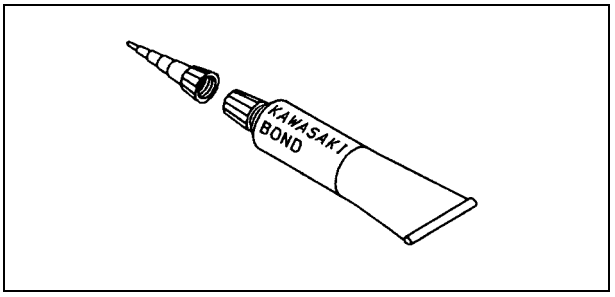

Bearing Puller Adapter:
57001–317

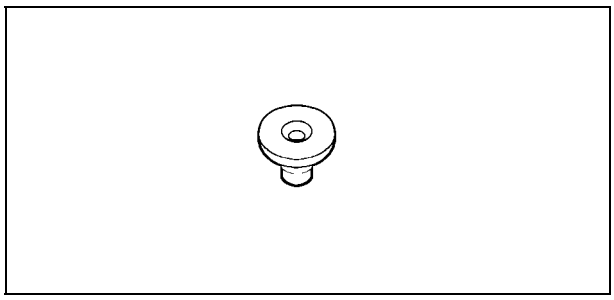

Crankcase Splitting

Crankcase Splitting

- Remove the engine (see Engine Removal/Installation chapter).
- Set the engine on a clean surface and hold the engine steady while parts are being removed.
- Remove:
  Crankshaft Sensor (see Electrical System chapter)
  Clutch (see Clutch chapter)
  External Shift Mechanism (see External Shift Mechanism Removal)
  Starter Motor (see Electrical System chapter)
  Oil Pump (see Engine Lubrication System chapter)
  Alternator Rotor (see Electrical System chapter)
  Oil Filter (see Engine Lubrication System chapter)
  Oil Cooler (see Engine Lubrication System chapter)

★If the crankshaft is to be removed, remove the pistons (see Engine Top End chapter).

- Hold the timing rotor [A] steady with the holder [B], and remove the timing rotor bolt [C] and the rotor.

Special Tool - Flywheel & Pulley Holder: 57001–1343

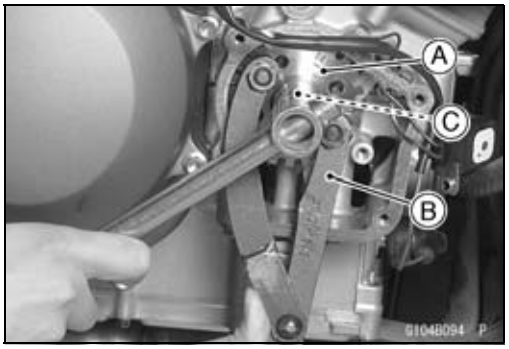

- Remove the upper crankcase bolts.

○First loosen the 6 mm bolts.
  6 mm Bolts [A]
  7 mm Bolts [B]

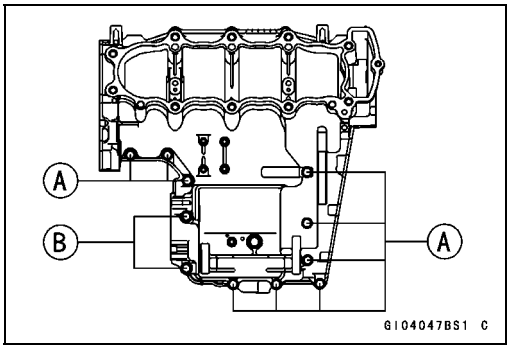

- Turn the engine upside down.
- Remove the oil pan, oil screen and oil pipes (see Engine Lubrication System chapter).
- Remove the lower crankcase bolts and brackets.

○First loosen the 6 mm bolts.
  6 mm Bolts [A]
  7 mm Bolts [B]

- Tap lightly around the crankcase mating surface with a plastic mallet, and split the crankcase. Take care not to damage the crankcase.

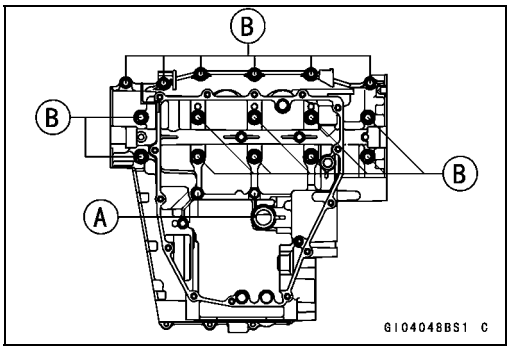

Crankcase Assembly

NOTE

○*The upper and lower crankcase halves are machined at the factory in the assembled state, so the crankcase halves must be replaced as a set.*

- With a high-flash point solvent, clean off the mating surfaces of the crankcases halves and wipe dry.
- Using compressed air, blow out the oil passages in the crankcase halves.

Crankcase Splitting

- Apply silicone sealant to the breather plate mating surface [A] 1 to 1.5 mm (0.04 to 0.06 in.) thick, and wait until sealant dries.

  Sealant - Three Bond #1207B and/or equivalent

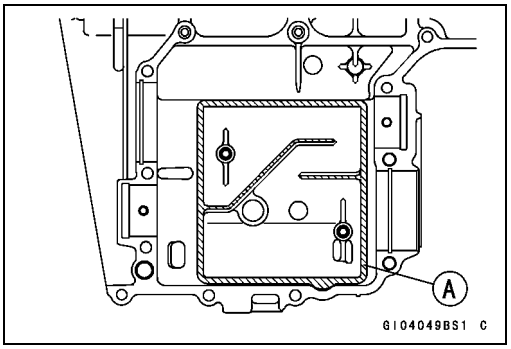

- Install the breather plate [B], and apply a non-permanent locking agent to the threads and tighten the bolts [A].

  Torque - Breather Plate Bolts: 9.8 N·m (1.0 kgf·m, 87 in·lb)

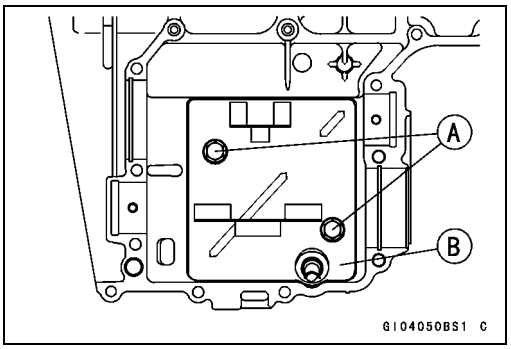

- Install the oil jet nozzles [A].
- Apply a non-permanent locking agent to the threads of oil jet nozzle bolts.
- Tighten:

  Torque - Oil Jet Nozzle Bolts: 6.9 N·m (0.70 kgf·m, 61 in·lb)

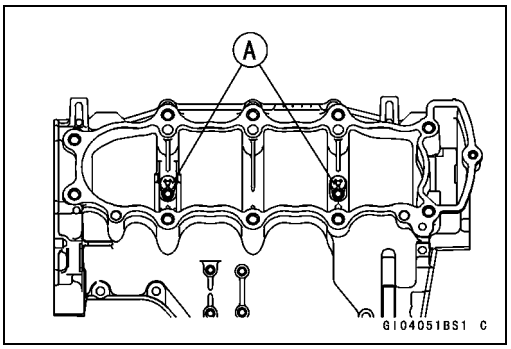

- Install:
  Crankshaft and Connecting Rods
  Camshaft Chain [A]
  Transmission Shaft and Gears
  Dowel Pins [B]
  Shift Drum
  Shift Forks and Shift Rods
- Before fitting the lower case on the upper case, check the following.

○Be sure to hang the camshaft chain on the crankshaft.
○Check to see that the shift drum and transmission gears are in the neutral position.

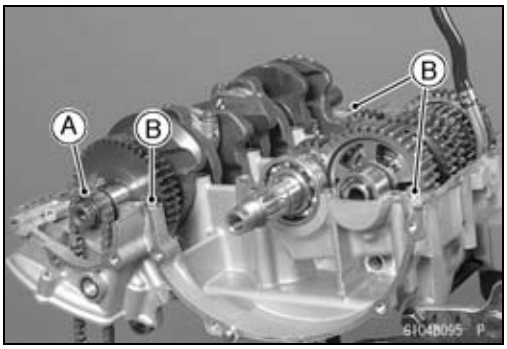

Crankcase Splitting

- Apply liquid gasket [A] to the mating surface of the lower crankcase half.

Sealant - Kawasaki Bond (Liquid Gasket – gray): 92104–1064

NOTE

○*Especially, apply a sealant carefully so that it shall be filled up on the grooves.*

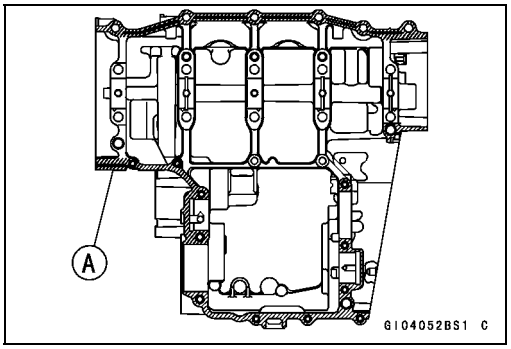

CAUTION
Do not apply silicone sealant around the crankshaft main bearing inserts, and oil passage holes.

- Tighten the lower crankcase bolts, using the following steps.
- The 7 mm bolts shown [A] has a copper plated washer. Replace it with a new one.

○Apply molybdenum disulfide oil to both side of the 7 mm bolt washers, bolt threads and seating surfaces of the washers and bolts.

○Following the sequence numbers on the lower crankcase half, tighten the 7 mm bolts [1 ~ 10].

Torque - Crankcase 7 mm Bolts: 24 N·m (2.4 kgf·m, 18 ft·lb)

○Install the clamp [B] and tighten the 7 mm bolts [C].

Torque - Crankcase (L38 mm) 7 mm Bolts: 27 N·m (2.8 kgf·m, 20 ft·lb)

○Tighten the 6 mm bolts [D].

Torque - Crankcase 6 mm Bolts: 12 N·m (1.2 kgf·m, 104 in·lb)

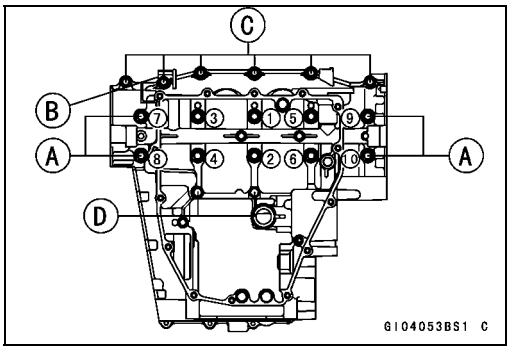

- Turn the crankcase assembly up.
- Tighten the upper crankcase bolts in the order listed.

○Install the clamp [A].

Torque - Crankcase 7 mm Bolts [B]: 20 N·m (2.0 kgf·m, 14.5 ft·lb)
Crankcase 6 mm Bolts [C]: 12 N·m (1.2 kgf·m, 104 in·lb)

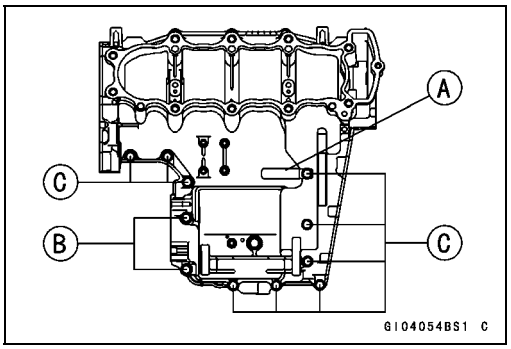

- After tightening all crankcase bolts, check the following items.

○Crankshaft and transmission shafts turn freely.

○While spinning the output shaft, gears shift smoothly from the 1st to 6th gear, and 6th to 1st.

○When the output shaft stays still, the gear can not be shifted to 2nd gear or other higher gear positions.

Crankshaft and Connecting Rods

Crankshaft Removal

- Split the crankcase (see Crankcase Splitting).
- Remove the crankshaft.

Crankshaft Installation

CAUTION

If the crankshaft, bearing inserts, or crankcase halves are replaced with new ones, select the bearing inserts and check clearance with a plastigage (press gauge) before assembling engine to be sure the correct bearing inserts are installed.

- Apply engine oil to the crankshaft main bearing inserts.
- Install the crankshaft with the camshaft chain [A] hanging on it.

Connecting Rod Removal

- Split the crankcase (see Crankcase Splitting).
- Remove the connecting rod nuts.
- Remove the crankshaft.

NOTE

○*Mark and record the locations of the connecting rods and their big end caps so that they can be reassembled in their original positions.*

- Remove the connecting rods from the crankshaft.

CAUTION

Discard the connecting rod bolts. To prevent damage to the crankpin surfaces, do not allow the connecting rod bolts to bump against the crankpins.

Connecting Rod Installation

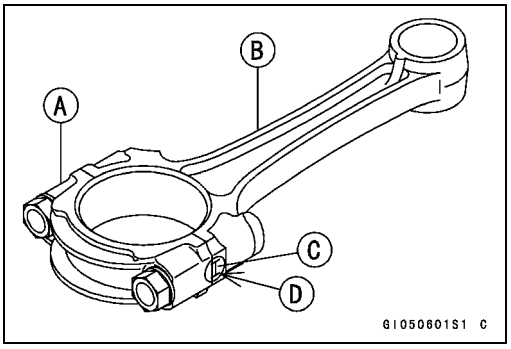

CAUTION

To minimize vibration, the connecting rods should have the same weight mark.

Big End Cap [A]
Connecting Rod [B]
Weight Mark, Alphabet [C]
Diameter Mark (Around Weight Mark) [D]: "○" or no mark

Crankshaft and Connecting Rods

CAUTION

If the connecting rods, big end bearing inserts, or crankshaft are replaced with new ones, select the bearing insert and check clearance with a plastigage (press gauge) before assembling engine to be sure the correct bearing inserts are installed.

CAUTION

The connecting rod bolts are designed to stretch when tightened. Never reuse them.

- Replace the connecting rod big end bolts and nuts with new ones.

- Apply molybdenum disulfide oil to the inner surface of upper and lower bearing inserts [A].
- Apply molybdenum disulfide oil to the threads [B] and seating surface [C] of the connecting rod nuts.
- Install the inserts so that their nails [D] are on the same side and fit them into the recess of the connecting rod and cap.

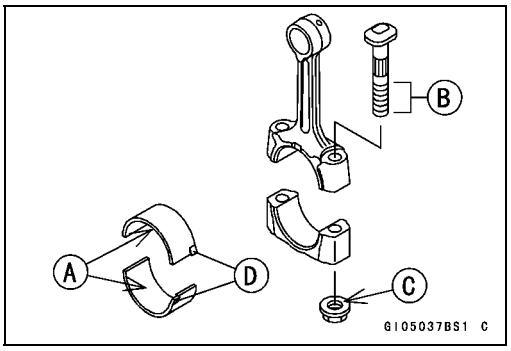

CAUTION

Wrong application of oil and grease could cause bearing damage.

○When installing the inserts [A], be careful not to damage the insert surface with the edge of the connecting rod [B] or the cap [C]. One way to install inserts is as follows.
Installation [D] to Cap
Installation [E] to Connecting Rod
Push [F]
Spare Dowel Pin [G]
Connecting Rod Bolts [H]

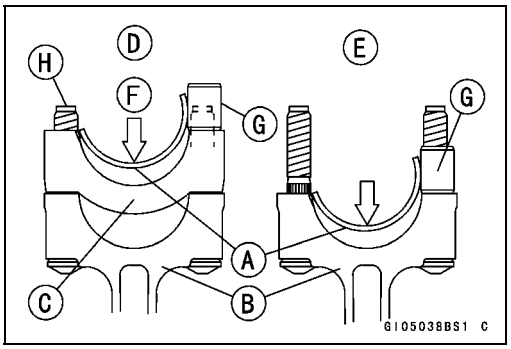

○The connecting rod big end is bolted using the “plastic region fastening method”.
○This method precisely achieves the needed clamping force without exceeding it unnecessarily, allowing the use of thinner, lighter bolts further decreasing connecting rod weight.
○There are two types of the plastic region fastening. One is a bolt length measurement method and other is a tightening torque method. Observe one of the following two, but the bolt length measurement method is preferable because this is a more reliable way to tighten the big end nuts.

Crankshaft and Connecting Rods

(1) Bolt Length Measurement Method

- Be sure to clean the bolts, nuts, and connecting rods thoroughly with high-flash point solvent, because the new connecting rods, bolts, and nuts are treated with an anti -rust solution.

⚠ WARNING

Clean the bolts, nuts, and connecting rods in a well -ventilated area, and take care that there is no spark or flame anywhere near the working area. This includes any appliance with a pilot light. Because of the danger of highly flammable liquids, do not use gasoline or low-flash point solvents to clean them.

CAUTION

Immediately dry the bolts and nuts with compressed air after cleaning.
Clean and dry the bolts and nuts completely.

- Install new bolts in reused connecting rods.
- Dent both bolt head and bolt tip with a punch as shown.
- Before tightening, use a point micrometer to measure the length of new connecting rod bolts and record the values to find the bolt stretch.
  Connecting Rod [A]
  Dent here with a punch [B]
  Nuts [C]
  Fit micrometer pins into dents [D]

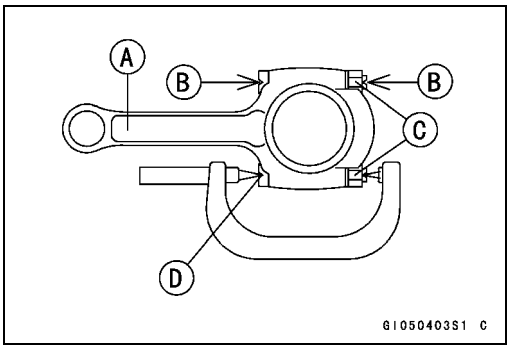

- Tighten the big end nuts until the bolt elongation reaches the specified length.
- Check the length of the connecting rod bolts.

★If the stretch is more than the usable range, the bolt has stretched too much. An overlongated bolt may break in use.

Bolt Length after tightening – Bolt Length before tightening = Stretch

Usable Range of Connecting Rod Bolt Stretch –

0.18 ~ 0.28 mm (0.007 ~ 0.011 in.)

Crankshaft and Connecting Rods

(2) Tightening Torque Method

- If you don't have a point micrometer, you may tighten the nuts using the "Tightening Torque Method".
- Be sure to clean the bolts, nuts, and connecting rods thoroughly with high-flash point solvent, because the new connecting rods, bolts, and nuts are treated with an anti -rust solution.

⚠ WARNING

Clean the bolts, nuts, and connecting rods in a well -ventilated area, and take care that there is no spark or flame anywhere near the working area. This includes any appliance with a pilot light. Because of the danger of highly flammable liquids, do not use gasoline or low-flash point solvents to clean them.

CAUTION

Immediately dry the bolts and nuts with compressed air after cleaning.
Clean and dry the bolts and nuts completely.

- Apply a small amount of molybdenum disulfide oil to the threads [A] and seating surface [B] of the connecting rod nuts.

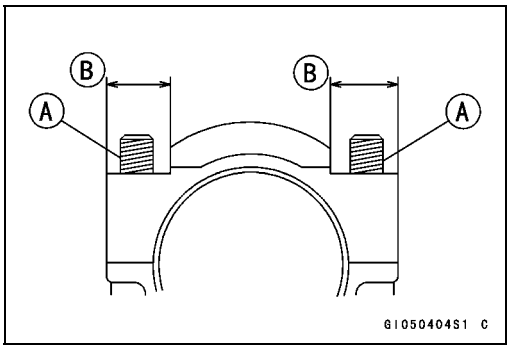

- First, tighten the nuts to the specified torque. See the table below
- Next, tighten the nuts **120°** more.

○Mark [A] the connecting rod big end caps and nuts so that nuts can be turned 120° [B] properly.

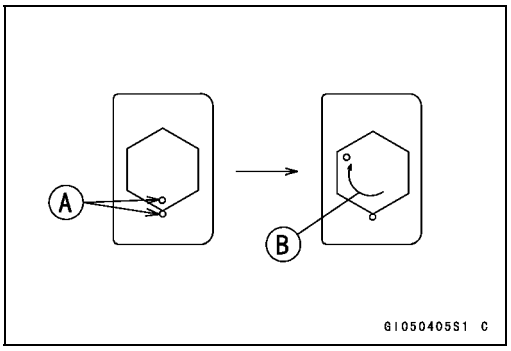

Connecting Rod Assy	Bolt, Nut	Torque + Angle N·m (kgf·m, ft·lb)
New	Use the bolts attached to new con-rod.	15 (1.5, 11) + 120°
	Another new bolts and nuts	15 (1.5, 11) + 120°
Used	Replace the bolts and nuts with new ones	15 (1.5, 11) + 120°

CAUTION

Since the friction force of the eating surface and thread portion of new nuts is different from that of used ones, the nut should be tightened with specified torque.
Be careful not to overtighten the nuts.

Crankshaft and Connecting Rods

Crankshaft/Connecting Rod Cleaning

- After removing the connecting rods from the crankshaft, clean them with a high-flash point solvent.
- Blow the crankshaft oil passages with compressed air to remove any foreign particles or residue that may have accumulated in the passages.

Connecting Rod Bend

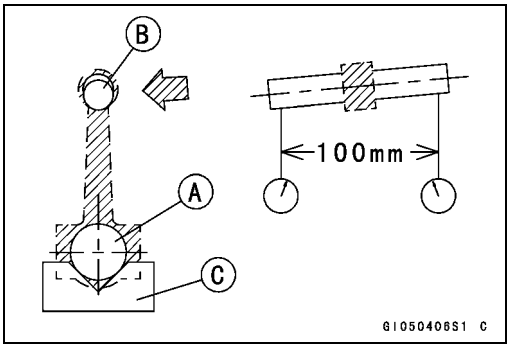

- Remove the connecting rod big end bearing inserts, and reinstall the connecting rod big end cap.
- Select an arbor [A] of the same diameter as the connecting rod big end, and insert the arbor through the connecting rod big end.
- Select an arbor of the same diameter as the piston pin and at least 100 mm (3.94 in.) long, and insert the arbor [B] through the connecting rod small end.
- On a surface plate, set the big-end arbor on V block [C].
- With the connecting rod held vertically, use a height gauge to measure the difference in the height of the arbor above the surface plate over a 100 mm (3.94 in.) length to determine the amount of connecting rod bend.

★If the connecting rod bend exceeds the service limit, the connecting rod must be replaced.

Connecting Rod Bend
Service Limit: TIR 0.2/100 mm (0.008/3.94 in.)

Connecting Rod Twist

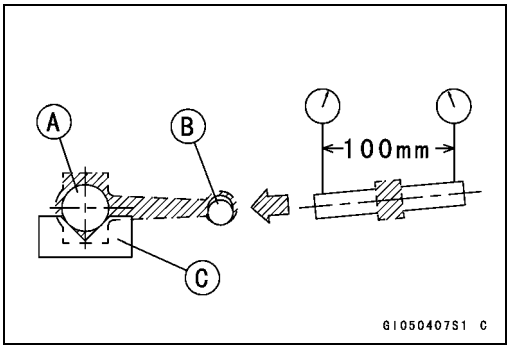

- With the big-end arbor [A] still on V block [C], hold the connecting rod horizontally and measure the amount that the arbor [B] varies from being paralleled with the surface plate over a 100 mm (3.94 in.) length of the arbor to determine the amount of connecting rod twist.

★If the connecting rod twist exceeds the service limit, the connecting rod must be replaced.

Connecting Rod Twist
Service Limit: TIR 0.2/100 mm (0.008/3.94 in.)

Connecting Rod Big End Side Clearance

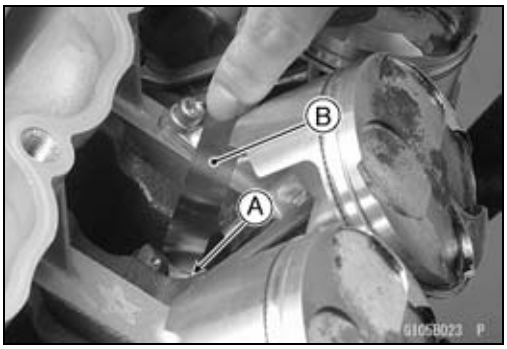

- Measure connecting rod big end side clearance [A].

○Insert a thickness gauge [B] between the big end and either crank web to determine clearance.

Connecting Rod Big End Side Clearance
Standard: 0.13 ~ 0.33 mm (0.005 ~ 0.013 in.)
Service Limit: 0.5 mm (0.020 in.)

★If the clearance exceeds the service limit, replace the connecting rod with new one and then check the clearance again. If the clearance is too large after connecting rod replacement, the crankshaft also must be replaced.

Crankshaft and Connecting Rods

Connecting Rod Big End Bearing Insert/Crankpin Wear

- Measure the bearing insert/crankpin [B] clearance with plastigage [A].
- Tighten the big end nuts to the specified torque (see Connecting Rod Installation).

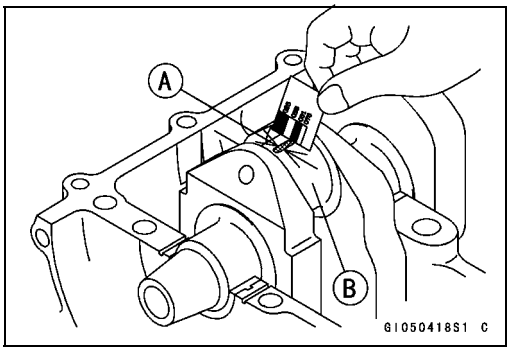

NOTE

○*Do not move the connecting rod and crankshaft during clearance measurement.*

Connecting Rod Big End Bearing Insert/Crankpin Clearance

Standard:	**0.035 ~ 0.064 mm (0.0014 ~ 0.0025 in.)**
Service Limit:	**0.10 mm (0.004 in.)**

★If the clearance is within the standard, no bearing replacement is required.

★If the clearance is between 0.065 mm (0.003 in.) and the service limit 0.10 mm (0.004 in.), replace the bearing inserts [A] with inserts painted black [B]. Check insert/crankpin clearance with the plastigage. The clearance may exceed the standard slightly, but it must not be less than the minimum in order to avoid bearing seizure.

★If the clearance exceeds the service limit, measure the diameter of the crankpins.

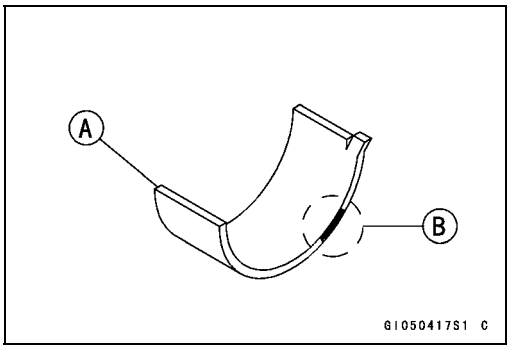

Crankpin Diameter

Standard:	**29.984 ~ 30.000 mm**
	(1.1805 ~ 1.1811 in.)
Service Limit:	**29.97 mm (1.18 in.)**

★If any crankpin has worn past the service limit, replace the crankshaft with a new one.

★If the measured crankpin diameters are not less than the service limit, but do not coincide with the original diameter markings on the crankshaft, make new marks on it.

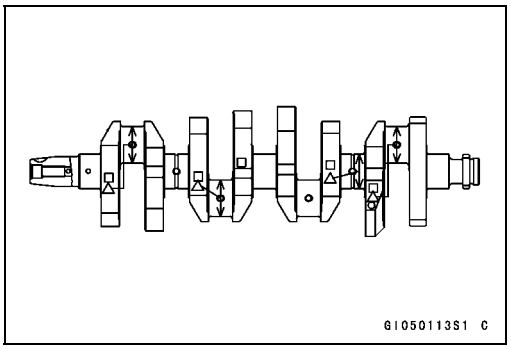

Crankpin Diameter Marks

None	**29.984 ~ 29.994 mm (1.1805 ~ 1.1809 in.)**
○	**29.995 ~ 30.000 mm (1.1809 ~ 1.1811 in.)**

Δ: Crankpin Diameter Marks, "○" mark or no mark.

Crankshaft and Connecting Rods

- Measure the connecting rod big end bore diameter, and mark each connecting rod big end in accordance with the bore diameter.
- Tighten the big end nuts to the specified torque (see Connecting Rod Installation).

NOTE

○*The mark already on the big end should almost coincide with the measurement because of little wear.*

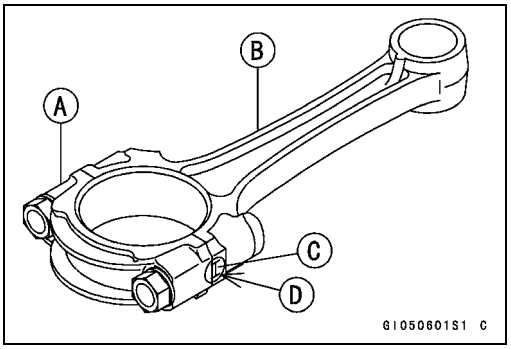

Connecting Rod Big End Bore Diameter Marks

None	**33.000 mm ~ 33.008 mm (1.2992 ~ 1.2995 in.)**
○	**33.009 ~ 33.016 mm (1.2996 ~ 1.2998 in.)**

Big End Cap [A]
Connecting Rod [B]
Weight Mark, Alphabet [C]
Diameter Mark (Around Weight Mark) [D]: "○" or no mark

- Select the proper bearing insert [A] in accordance with the combination of the connecting rod and crankshaft coding.
  Size Color [B]

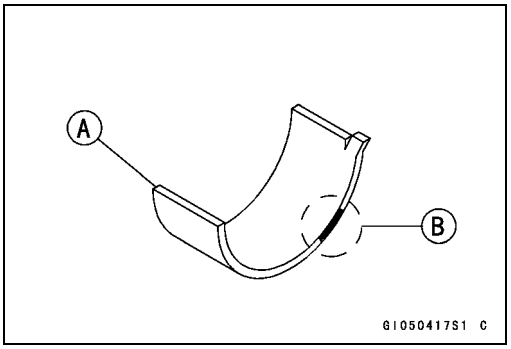

Con-rod Big End Bore Diameter Marking	Crankpin Diameter Marking	Bearing Insert	
		Size Color	Part Number
None	○	Pink	92028–1880
None	None	Brown	92028–1879
○	○		
○	None	Black	92028–1878

- Install the new inserts in the connecting rod and check insert/crankpin clearance with the plastigage.

Crankshaft Side Clearance

- Insert a thickness gauge [A] between the crankcase main bearing and the crank web at the No. 2 journal [B] to determine clearance.

★If the clearance exceeds the service limit, replace the crankcase halves as a set.

NOTE

○*The upper and lower crankcase halves are machined at the factory in the assembled state, so the crankcase halves must be replaced as a set.*

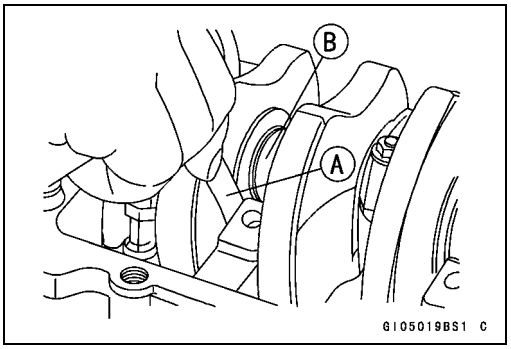

Crankshaft Side Clearance

Standard:	**0.05 ~ 0.15 mm (0.002 ~ 0.006 in.)**
Service Limit:	**0.35 mm (0.014 in.)**

Crankshaft and Connecting Rods

Crankshaft Runout

- Measure the crankshaft runout.

★If the measurement exceeds the service limit, replace the crankshaft.

Crankshaft Runout

Standard:	**TIR 0.02 mm (0.0008 in.) or less**
Service Limit:	**TIR 0.05 mmm (0.002 in.)**

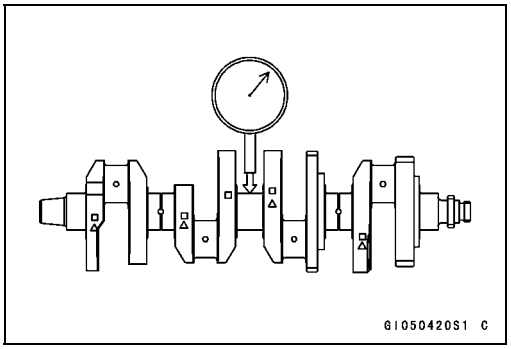

Crankshaft Main Bearing Insert/Journal Wear

- Using a plastigage (press gauge) [A], measure the bearing insert/journal [B] clearance.

NOTE

○*Tighten the crankcase bolts to the specified torque (see Crankcase Assembly).*

○*Do not turn the crankshaft during clearance measurement.*

○*Journal clearance less than 0.025 mm (0.001 in.) can not be measured by plastigage, however, using genuine parts maintains the minimum standard clearance.*

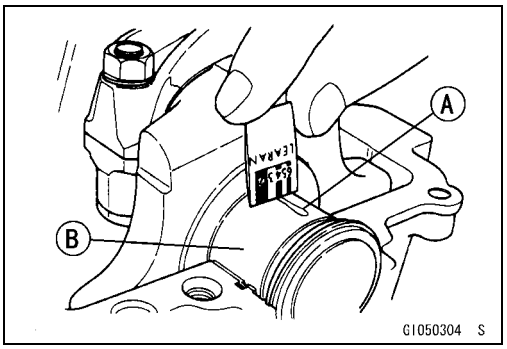

Crankshaft Main Bearing Insert/Journal Clearance

Standard:	**0.031 ~ 0.059 mm (0.0012 ~ 0.0023 in.)**
Service Limit:	**0.10 mm (0.0039 in.)**

★If the clearance is within the standard, no bearing replacement is required.

★If the clearance is between 0.059 mm (0.0023 in.) and the service limit 0.09 mm (0.0035 in.), replace the bearing inserts with inserts [A] painted blue [B]. Check insert/journal clearance with the plastigage. The clearance may exceed the standard slightly, but it must not be less than the minimum in order to avoid bearing seizure.

★If the clearance exceeds the service limit, measure the diameter of the crankshaft main journal.

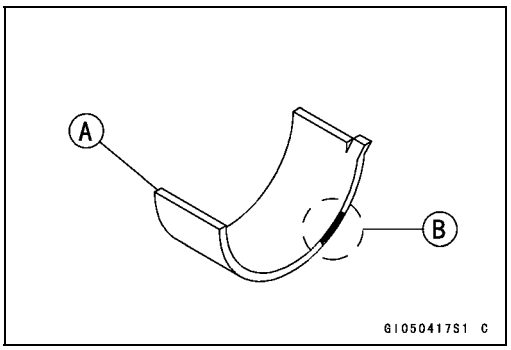

Crankshaft Main Journal Diameter

Standard:	**29.984 ~ 30.000 mm (1.1805 ~ 1.1811 in.)**
Service Limit:	**29.96 mm (1.18 in.)**

★If any journal has worn past the service limit, replace the crankshaft with a new one.

★If the measured journal diameters are not less than the service limit, but do not coincide with the original diameter markings on the crankshaft, make new marks on it.

Crankshaft Main Journal Diameter Marks

None	**29.984 ~ 29.994 mm (1.1805 ~ 1.1809 in.)**
1	**29.995 ~ 30.000 mm (1.1809 ~ 1.1811 in.)**

□: Crankshaft Main Journal Diameter Marks, "1" mark or no mark.

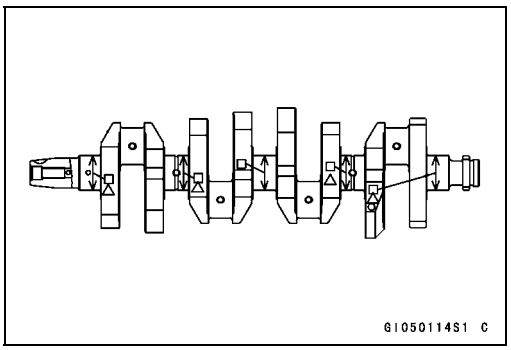

Crankshaft and Connecting Rods

- Measure the main bearing bore diameter, and mark the upper crankcase half in accordance with the bore diameter.
  A: Crankcase Main Bearing Bore Diameter Marks, "○" mark or no mark.

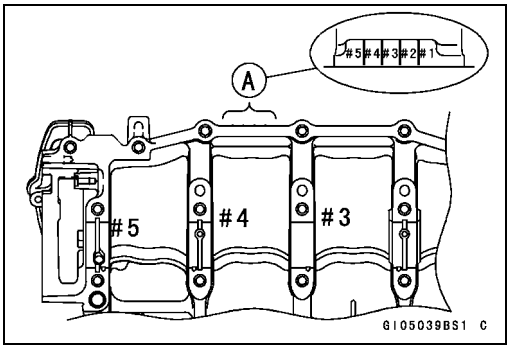

NOTE

○ *Tighten the crankcase bolts to the specified torque (see Crankcase Assembly).*

○ *The mark already on the upper crankcase half should almost coincide with the measurement.*

Crankcase Main Bearing Bore Diameter Marks

○	**33.000 ~ 33.008 mm (1.2992 ~ 1.2995 in.)**
None	**33.009 ~ 33.016 mm (1.2996 ~ 1.2998 in.)**

- Select the proper bearing insert [A] in accordance with the combination of the crankcase and crankshaft coding.
  Size Color [B]

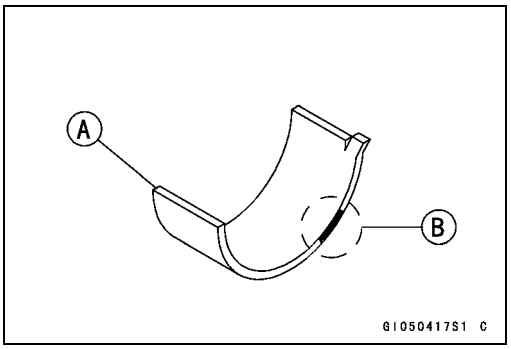

Crankcase Main Bearing Bore Diameter Marking	Crankshaft Main Journal Diameter Marking	Bearing Insert*		
		Size Color	Part Number	Journal Nos.
○	1	Brown	92028-1883	3, 5
			92028-1886	1, 2, 4
None	1	Black	92028-1882	3, 5
○	None		92028-1885	1, 2, 4
None	None	Blue	92028-1881	3, 5
			92028-1884	1, 2, 4

*The bearing inserts for Nos. 1, 2 and 4 journals have an oil groove, respectively.

- Install the new inserts in the crankcase halves and check insert/journal clearance with the plastigage.

Starter Motor Clutch

Starter Motor Clutch Removal/Installation

- Refer to Alternator Rotor Removal and Installation in the Electrical System chapter.

Starter Motor Clutch Inspection

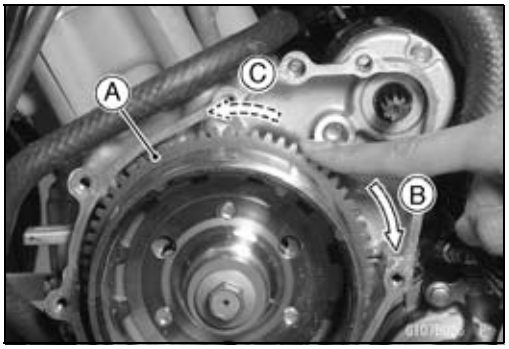

- Remove:
  Alternator Cover (see Electrical System chapter)
  Starter Idle Gear
- Turn the starter motor clutch gear [A] by hand. The starter motor clutch gear should turn clockwise [B] freely, but should not turn counterclockwise [C].

★If the starter motor clutch does not operate as it should or if it makes noise, go to the next step.

- Disassemble the starter motor clutch, and visually inspect the clutch parts.

★If there is any worn or damaged part, replace it.

NOTE

○*Examine the starter motor clutch gear as well. Replace it if it worn or damaged.*

Starter Motor Clutch Disassembly

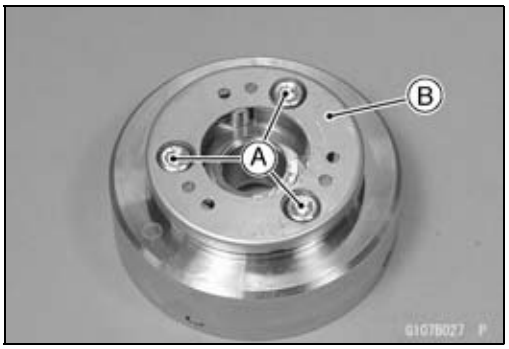

- Remove:
  Alternator Rotor (see Electrical System chapter)
  Starter Motor Clutch Bolts [A] and Starter Motor Clutch [B]

Starter Motor Clutch Assembly

- Apply a non-permanent locking agent to the threads of the starter motor clutch bolts and tighten them.

Torque - Starter Motor Clutch Bolts: 33 N·m (3.4 kgf·m, 24 ft·lb)

Transmission

Shift Pedal Removal

- Mark the position of the shift lever on the shift shaft so that it can be installed later in the same position.
- Remove the shift lever and shift pedal.

Shift Pedal Installation

- Install the shift pedal [A] so that the distance between the center of the shift pedal and the center line of the shift rod [B] is 10 ~ 15 mm (0.39 ~ 0.59 in.) by loosening the front and rear locknuts [C] and turning the rod.

NOTE

○*The locknut next to the groove [D] of the rod has left -hand threads.*

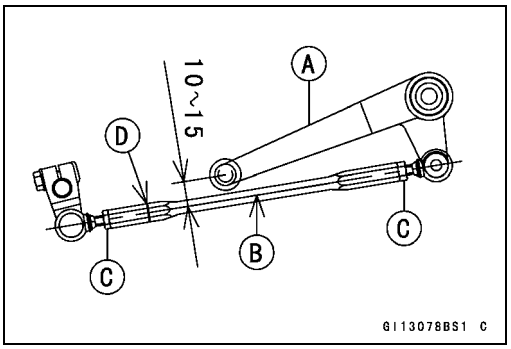

★If necessary, adjust the pedal position from the standard position to suit you as follows.

- Loosen the front and rear rod locknuts.
- Turn the rod to adjust the pedal position.
- Tighten the locknuts securely.

External Shift Mechanism Removal

- Drain the engine oil (see Cooling System in the Periodic Maintenance chapter).
- Remove:
  Shift Pedal (see Shift Pedal Removal)
  Clutch (see Clutch chapter)
  Bolts [A], Oil Pipe Holders [B], Oil Pipe [C] and O-ring

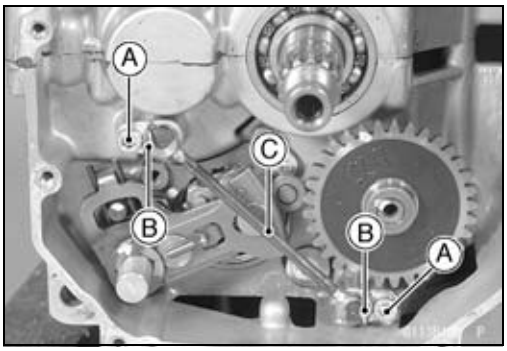

- Remove:
  Shift Shaft [A]
  Bolt [B]
  Gear Positioning Lever [C] and Spring
  Collar

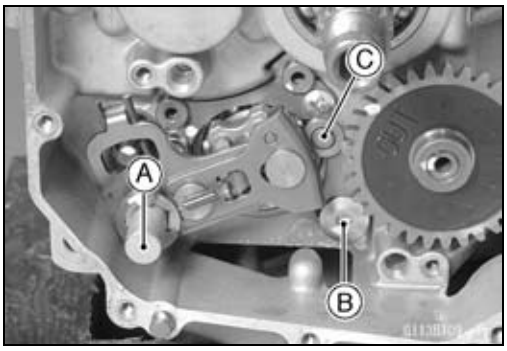

External Shift Mechanism Installation

- Install the gear positioning lever [A] as shown, and tighten the bolt.

  Springs [B] Collar [C]
  Bolt [D]

  Torque - Gear Positioning Lever Bolt: 9.8 N·m (1.0 kgf·m, 87 in·lb)

- Tighten the oil pipe holder bolts.

  Torque - Oil Pipe Holder Bolts: 12 N·m (1.2 kgf·m, 104 in·lb)

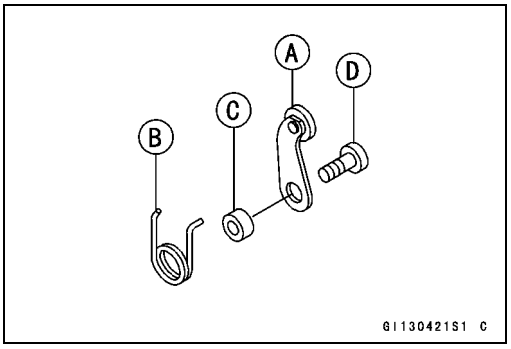

Transmission

External Shift Mechanism Inspection

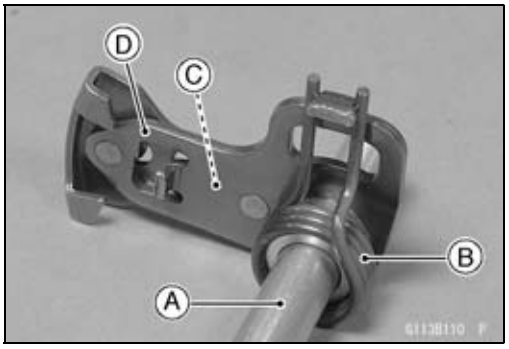

- Examine the shift shaft [A] for any damage.
★If the shaft is bent, straighten or replace it.
★If the serration are damaged, replace the shaft.
★If the springs [B] [C] are damaged in any way, replace them.
★If the shift mechanism arm [D] is damaged in any way, replace the arm.

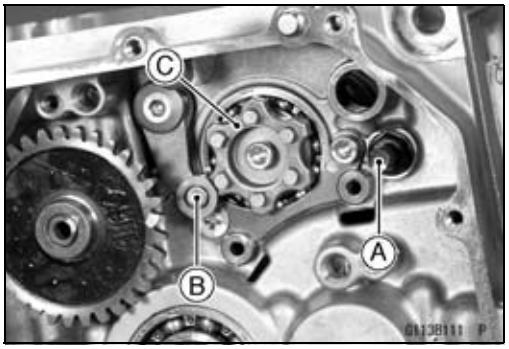

- Check the return spring pin [A] is not loose.
★If it is loose, unscrew it, apply a non-permanent locking agent to the threads, and tighten it.

Torque - Shift Shaft Return Spring Pin: 28 N·m (2.9 kgf·m, 21 ft·lb)

- Check the gear positioning lever [B] and it's spring for breaks or distortion.
★If the lever or spring are damaged in any way, replace them.
- Visually inspect the shift drum cam [C].
★If they are badly worn or if they show any damage, replace it.

Transmission Shaft Removal

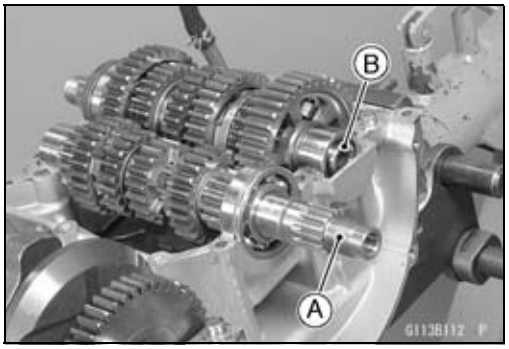

- Split the crankcase (see Crankcase Splitting).
- Remove the drive shaft [A] and output shaft [B].

Transmission Shaft Installation

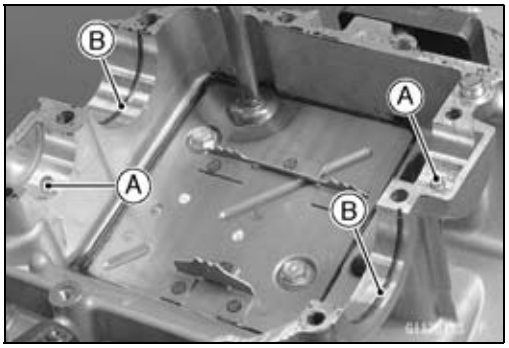

- Check to see that the set pins [A] and set rings [B] are in place.

Transmission

- Install the drive shaft and output shaft into the upper crankcase half.
- Apply engine oil to the sliding surfaces of the gears and bearings.

○The bearing set pins and rings must match properly with the holes or grooves in the bearing outer races. When they are properly matched, there is no clearance between the crankcase and the bearing outer races [A].

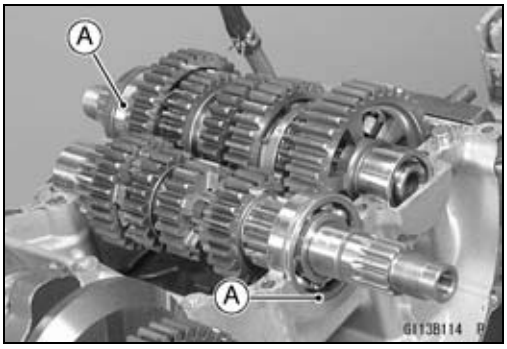

Transmission Shaft Disassembly

- Remove the transmission shafts (see Transmission Shaft Removal).
- Remove the circlips, and disassemble the transmission shafts.

Special Tool - Outside Circlip Pliers: 57001-144

- The 5th gear [A] on the output shaft has three steel balls assembled into it for the positive neutral finder mechanism. Remove the 5th gear.

○Set the output shaft in a vertical position holding the 3rd gear [B].

○Spin the 5th gear quickly [C] and pull it off upward.

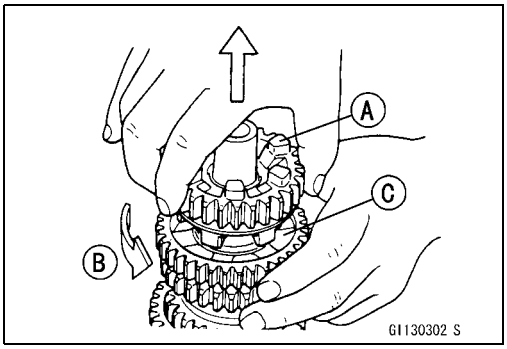

- Remove the ball bearing [A] and/or collar from each shafts.

Special Tools - Bearing Puller: 57001-135 [B]
Bearing Puller Adapter: 57001-317 [C]

- Discard the bearing.

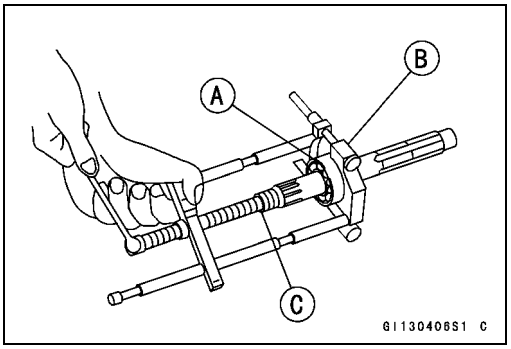

Transmission Shaft Assembly

- Apply engine oil to the ball bearing and shaft.
- Install the ball bearing on the drive shaft [A] with the groove [B] toward the clutch side using the steering stem bearing driver.
- Install the ball bearing and collar on the output shaft [C] using the steering stem bearing driver.

Special Tool - Steering Stem Bearing Driver: 57001–382

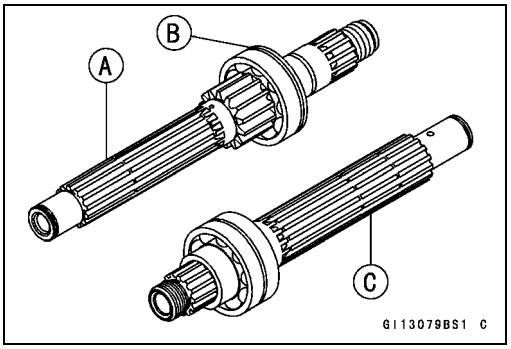

Transmission

- Install the gear bushing [A] on the shafts with their oil holes [B] aligned.

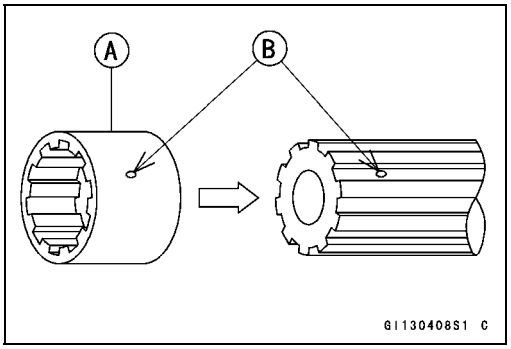

- The drive shaft gears can be recognized by size: the gear with the smallest diameter is 1st gear, and the largest one is 6th gear. Be sure that all parts are put back in the correct sequence and all circlips and washers are properly in place.
- Install the 3rd/4th gear onto the drive shaft with their holes aligned.
- The output shaft gears can be recognized by size: the gear with the largest diameter is 1st gear, and the smallest one is 6th gear. Be sure that all parts are put back in the correct sequence and all circlips and washers are properly in place.
- Install the 5th and 6th gears onto the output shaft with their holes aligned.

- Replace any circlip that were removed with new ones.
- Install the circlips [A] so that opening [B] is aligned with a spline groove [C].
- Check that each gear spins or slides freely on the transmission shafts without binding after assembly.

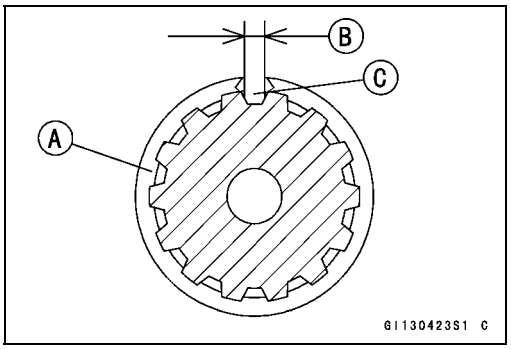

- Fit the steel balls into the 5th gear holes in the output shaft as shown.
  [A] Gear (5th)
  [B] Shaft
  [C] Steel Balls
  [D] Oil Holes

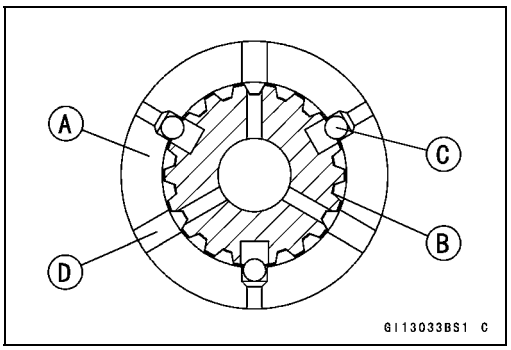

CAUTION
Do not apply grease to the steel balls to hold them in place. This will cause the positive neutral finder mechanism to malfunction.

○Check the ball-locking effect that the 5th gear does not come out of the output shaft when moving it up and down by hand.

Transmission

Shift Drum and Fork Removal

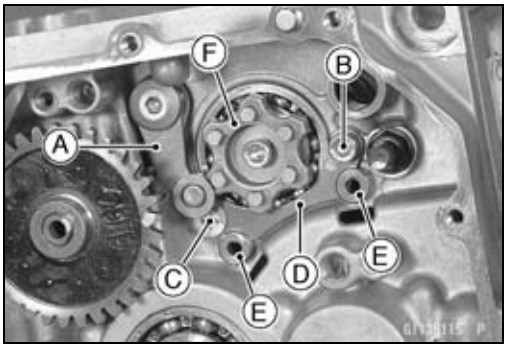

- Remove:
  Clutch (see Clutch chapter)
  Oil Pan (see Engine Lubrication System chapter)
  External Shift Mechanism (see External Shift Mechanism Removal)
  Gear Positioning Lever [A]
  Bolt [B] and Screw [C]
  Shift Drum Bearing Holder [D]
- Pull out the shift rods [E], and take off the shift forks.
- Pull out the shift drum [F] with bearing.

Shift Drum and Fork Installation

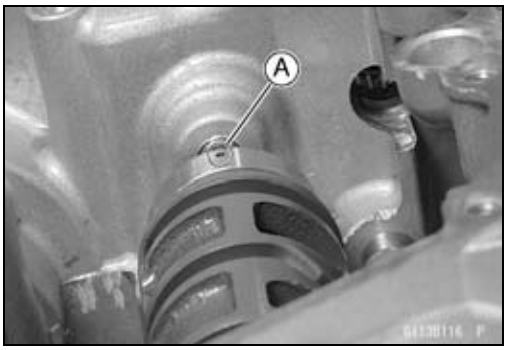

- Set the transmission gears in the neutral position.
- Install the shift drum so that the punch mark [A] on it faces oil pan side.

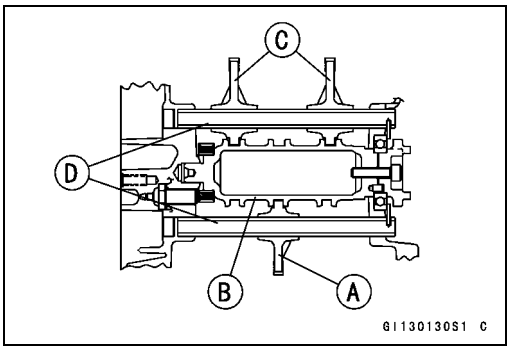

- Install the shift forks as shown.
- Position the one with shortest ears [A] on the drive shaft and place the pin in the center groove in the shift drum [B].

○The two forks [C] on the output shaft are identical.

- Install the shift rods [D], noting the groove position. The rods are identical.
- Apply a non-permanent locking agent to the threads of the shift drum bearing holder screws, and tighten them and shift drum bearing holder bolt.

Torque - Shift Drum Bearing Holder Bolt: 12 N·m (1.2 kgf·m, 104 in·lb)
Shift Drum Bearing Holder Screws: 4.9 N·m (0.50 kgf·m, 43 in·lb)

Shift Drum Disassembly

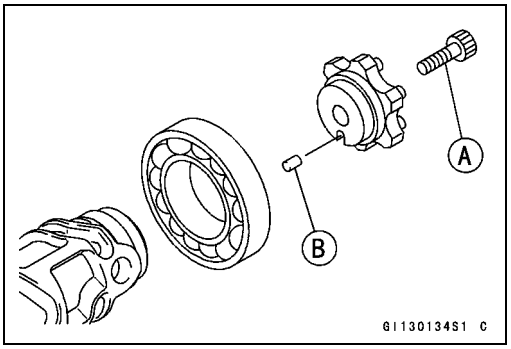

- Remove the shift drum (see Shift Drum and Fork Removal).
- While holding the shift drum with a vise, remove the shift drum cam holder bolt.
  [A] Shift Drum Cam Holder Bolt
  [B] Dowel Pin

Transmission

- Remove the holder [A] with a bearing puller [B].

  Special Tool - Bearing Puller: 57001–135

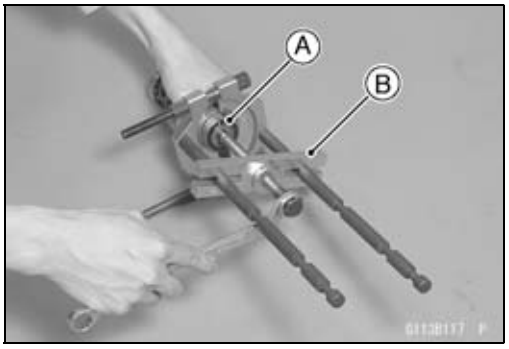

Shift Drum Assembly

- Be sure to install the dowel pin.
- Apply a non-permanent locking agent to the threads of the shift drum cam holder bolt, and tighten it.

  Torque - Shift Drum Cam Holder Bolt: 12 N·m (1.2 kgf·m, 104 in·lb)

- Install the holder with a steering stem bearing driver so that positioning hole [A] faces outside as shown.
  [B] Dowel Pin
  [C] 57°

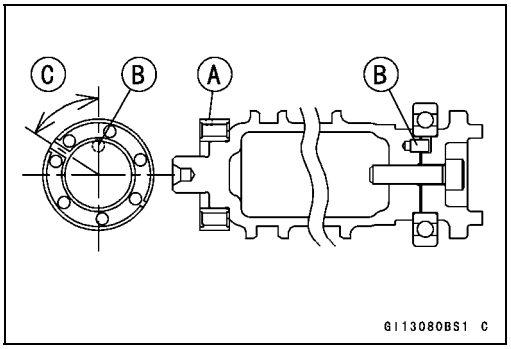

Shift Fork Bending

- Visually inspect the shift forks, and replace any fork that is bent. A bent fork could cause difficulty in shifting, or allow the transmission to jump out of gear when under power.
  90° [A]

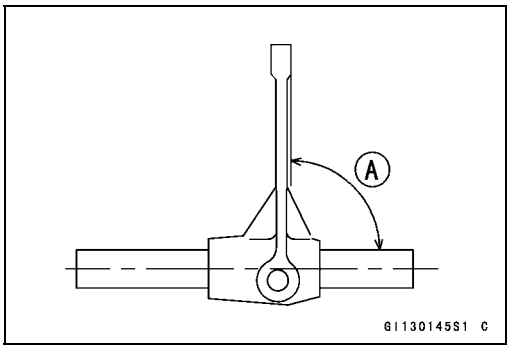

Shift Fork/Gear Groove Wear

- Measure the thickness of the shift fork ears [A], and measure the width [B] of the gear grooves.

★If the thickness of a shift fork ear is less than the service limit, the shift fork must be replaced.

Shift Fork Ear Thickness

Standard:	**5.9 ~ 6.0 mm (0.232 ~ 0.236 in.)**
Service Limit:	**5.8 mm (0.228 in.)**

★If the gear groove is worn over the service limit, the gear must be replaced.

Gear Groove Width

Standard:	**6.05 ~ 6.15 mm (0.238 ~ 0.242 in.)**
Service Limit:	**6.25 mm (0.246 in.)**

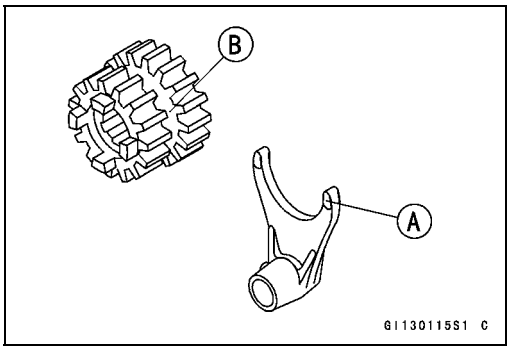

Transmission

Shift Fork Guide Pin/Drum Groove Wear

- Measure the diameter of each shift fork guide pin [A], and measure the width [B] of each shift drum groove.

★If the guide pin on any shift fork is less than the service limit, the fork must be replaced.

Shift Fork Guide Pin Diameter

Standard:	**5.9 ~ 6.0 mm (0.232 ~ 0.236 in.)**
Service Limit:	**5.8 mm (0.228 in.)**

★If any shift drum groove is worn over the service limit, the drum must be replaced.

Shift Drum Groove Width

Standard:	**6.05 ~ 6.20 mm (0.238 ~ 0.244 in.)**
Service Limit:	**6.3 mm (0.248 in.)**

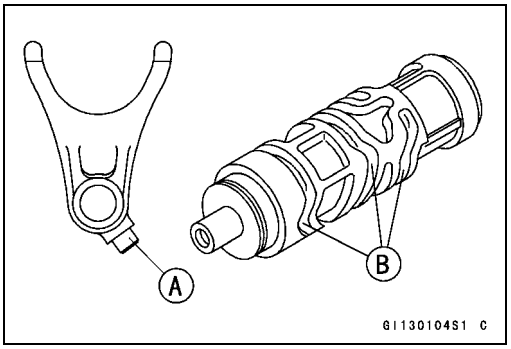

Gear Dog and Gear Dog Hole Damage

- Visually inspect the gear dogs [A] and gear dog holes [B].

★Replace any damaged gears or gears with excessively worn dogs or dog holes.

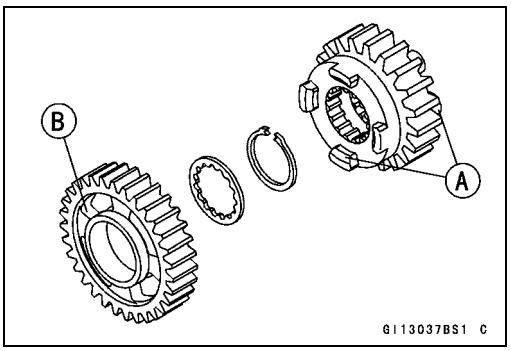

Transmission

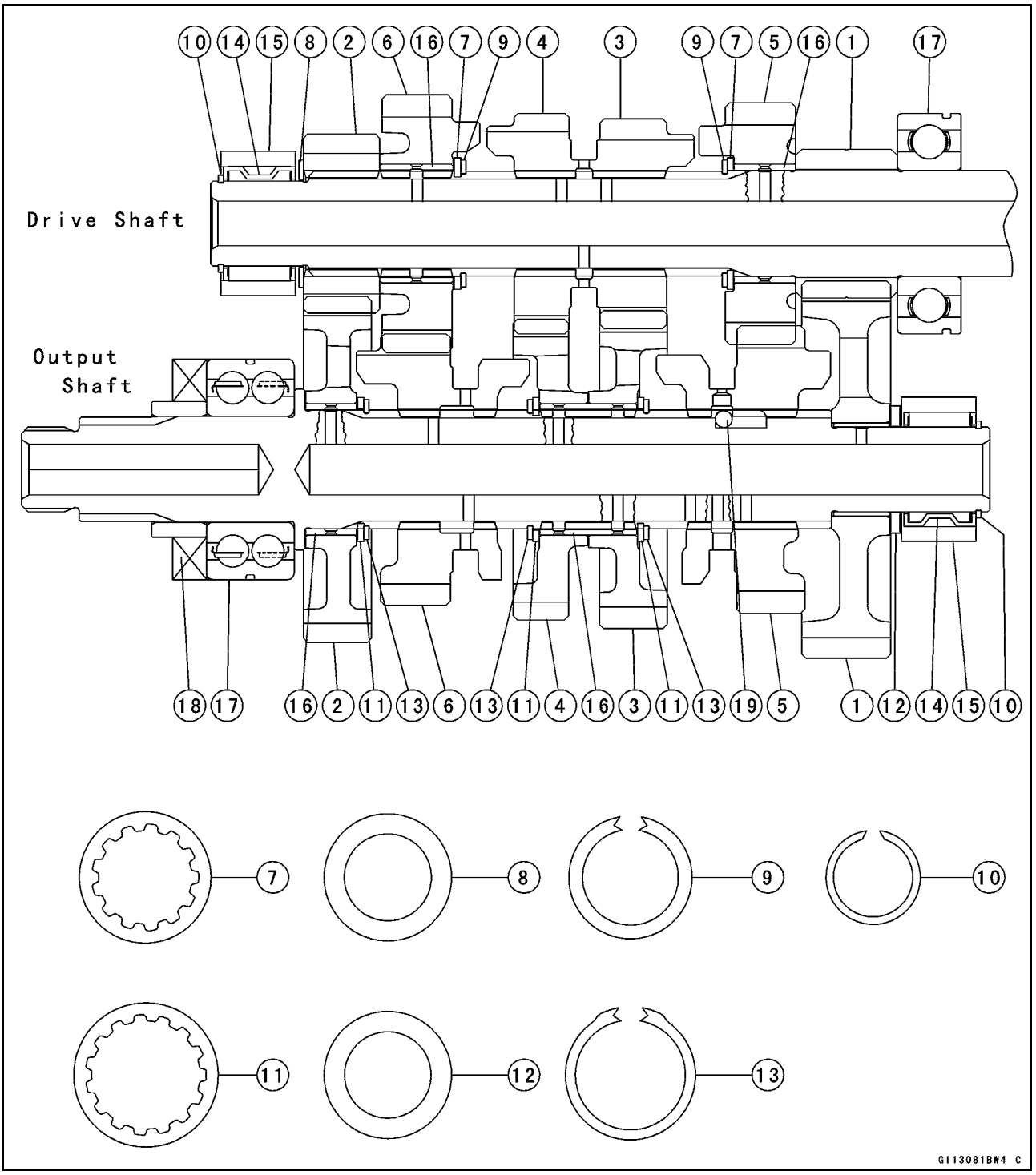

1. 1st Gear
2. 2nd Gear
3. 3rd Gear
4. 4th Gear
5. 5th Gear
6. 6th (Top) Gear
7. Toothed Washer
8. Thrust Washer (Thin)
9. Circlip
10. Circlip
11. Toothed Washer
12. Thrust Washer
13. Circlip
14. Needle Bearing
15. Bearing Outer Race
16. Bushing
17. Ball Bearing
18. Oil Seal
19. Steel Ball

Wheels / Tires

Table of Contents

Exploded View 10-2
Specifications 10-4
Special Tools 10-5
Wheels (Rims) 10-6
Front Wheel Removal 10-6
Front Wheel Installation 10-6
Rear Wheel Removal 10-7
Rear Wheel Installation 10-8
Wheel Inspection 10-9
Axle Inspection 10-9
Balance Inspection 10-9
Balance Adjustment 10-10
Balance Weight Removal 10-10
Balance Weight Installation 10-10
Tires 10-13
Air Pressure Inspection/Adjustment 10-13
Tire Inspection 10-13
Tire Removal 10-13
Tire Installation 10-13
Tire Repair 10-15
Hub Bearing 10-16
Hub Bearing Removal 10-16
Hub Bearing Installation 10-16
Hub Bearing Inspection 10-17
Hub Bearing Lubrication 10-17

Exploded View

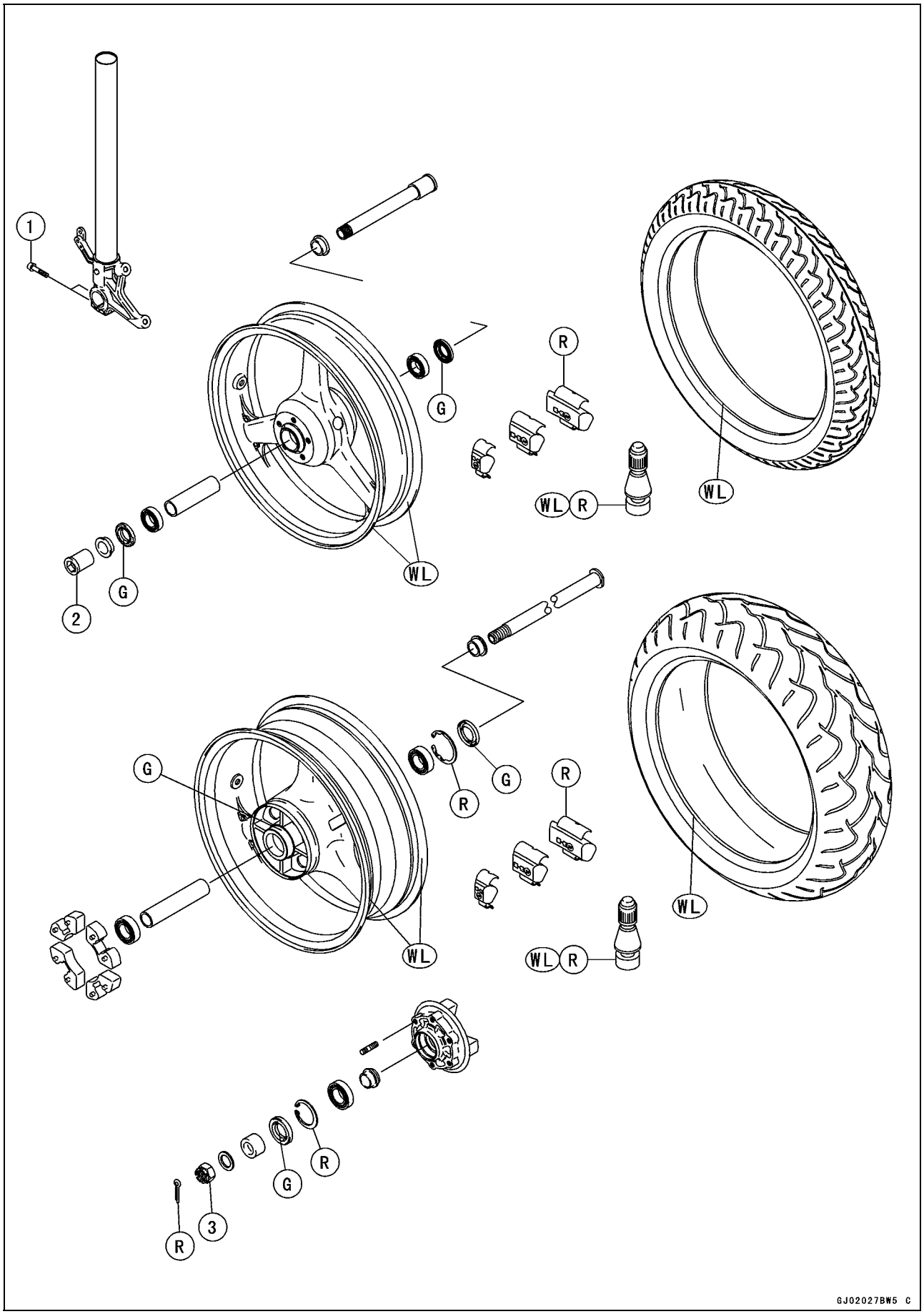

Exploded View

No.	Fastener	Torque			Remarks
		N·m	kgf·m	ft·lb	
1	Front axle clamp bolts	20	2.0	14.5	
2	Front axle nut	127	13.0	94	
3	Rear axle nut	127	13.0	94	

G: Apply grease.
R: Replacement Parts
WL: Apply soap and water solution or rubber lubricant.

Specifications

Item		Standard	Service Limit
Wheels (Rims):			
Rim runout:	Axial	– – –	0.5 mm (0.02 in.)
	Radial	– – –	0.8 mm (0.03 in.)
Axle runout/100 mm (3.9 in.)		0.05 mm (0.002 in.) or less	0.2 mm (0.01 in.)
Wheel balance		10 g or less	– – –
Balance weights		10 g, 20 g, 30 g	– – –
Tires:			
Tread depth:			
	Front	BRIDGESTONE: 3.8 mm (0.15 in.) MICHELIN: 3.8 mm (0.15 in.)	1 mm (0.04 in.) (DE, AT, CH) 1.6 mm (0.06 in.)
	Rear	BRIDGESTONE: 5.8 mm (0.23 in.) MICHELIN: 5.6 mm (0.22 in.)	Up to 130 km/h (80 mph): 2 mm (0.08 in.) Over 130 km/h (80 mph): 3 mm (0.12 in.)
Standard tires:		Make, Type	Size
	Front	BRIDGESTONE, BATTLAX BT019F RADIAL MICHELIN Pilot Sport M	120/65 ZR17 M/C (56 W)
	Rear	BRIDGESTONE, BATTLAX BT012R RADIAL G MICHELIN Pilot Sport M	180/55 ZR17 M/C (73 W)

DE: Germany AT: Austria CH: Switzerland

⚠ WARNING

Use the same manufacturer's tires on both front and rear wheels.

Special Tools

Inside Circlip Pliers:
57001–143

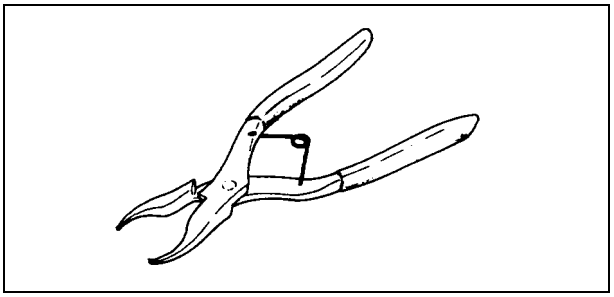

Bearing Driver Set:
57001–1129

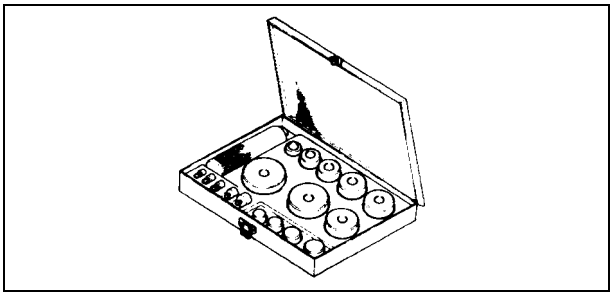

Jack:
57001–1238

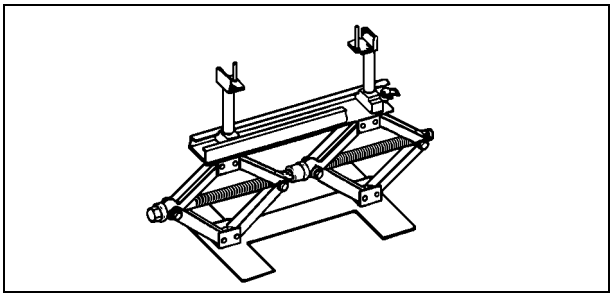

Bearing Remover Head,ϕ25 × ϕ28 :
57001–1346

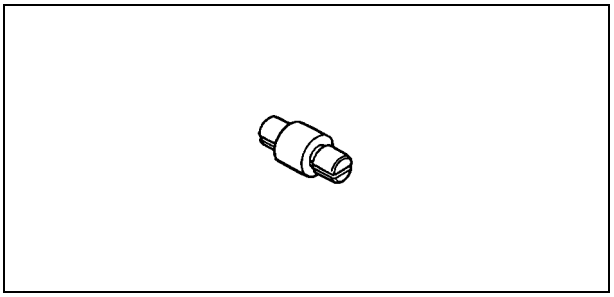

Bearing Remover Shaft, ϕ13:
57001–1377

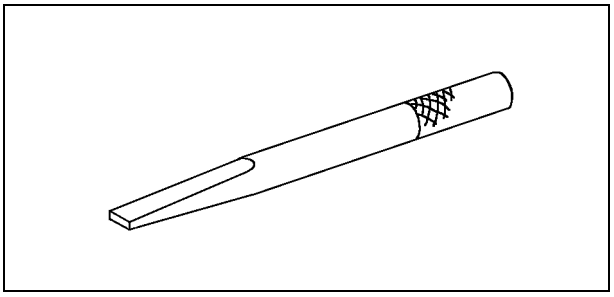

Wheels (Rims)

Front Wheel Removal

- Remove:
  Lower Fairing (see Frame chapter)
  Front Fender (see Frame chapter)
  Brake Caliper Mounting Bolts [A]

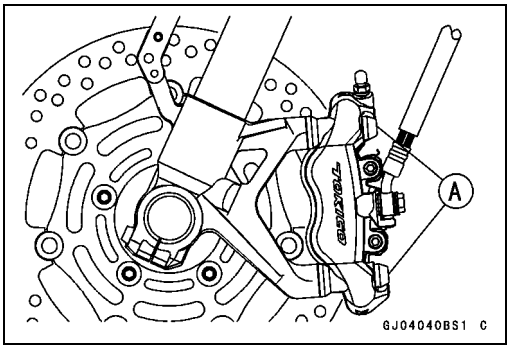

- Loosen:
  Right Side Axle Clamp Bolts [A]
  Axle [B]

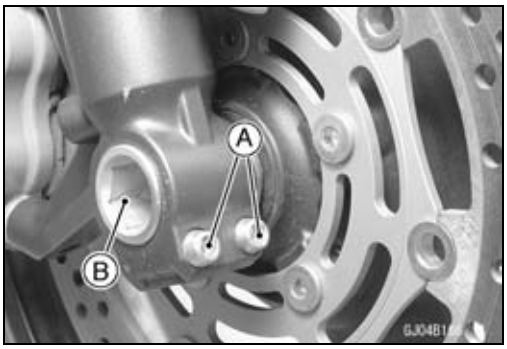

- Raise the front wheel off the ground.

  Special Tool - Jack: 57001–1238
- Pull out the axle to the right and drop the front wheel out of the forks.

CAUTION
Do not lay the wheel down on one of the discs. This can damage or warp the disc. Place blocks under the wheel so that the disc does not touch the ground.

Front Wheel Installation

NOTE

○*The direction of the wheel rotation [A] is shown by an arrow [B] on the wheel spoke.*

- Check the wheel rotation mark on the front wheel and install it.

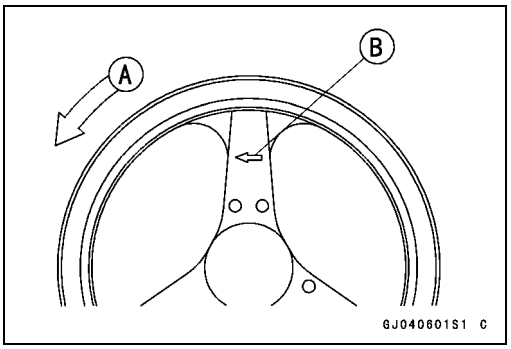

Wheels (Rims)

- Fit the collars [A] on the both sides of the hub.
- Tighten the axle nut [B].

Torque - Front Axle Nut: 127 N·m (13.0 kgf·m, 94 ft·lb)

- Before tightening the clamp bolts on the right front fork leg, pump the front fork up and down 4 or 5 times to all on the right front fork leg to seat on the front axle.

NOTE

○*Put a block in front of the front wheel to stop moving.*
○*Tighten the two clamp bolts alternately two times to ensure even tightening torque.*

- Tighten the axle clamp bolts [C] on the right fork leg first.

Torque - Front Axle Clamp Bolts : 20 N·m (2.0 kgf·m, 14.5 ft·lb)

- Install the front brake calipers (see Brakes chapter).
- Check the front brake effectiveness (see Brakes chapter).

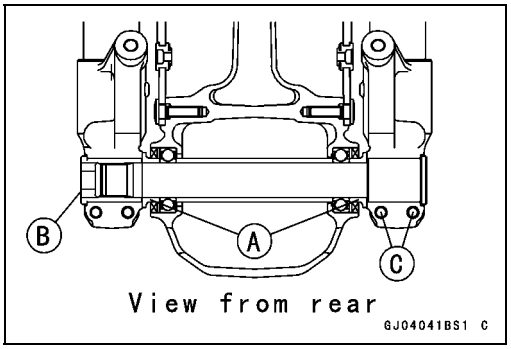

⚠ WARNING

Do not attempt to drive the motorcycle until a full brake lever is obtained by pumping the brake lever until the pads are against the disc. The brake will not function on the first application of the lever if this is not done.

Rear Wheel Removal

- Remove the lower fairings and side stand (see Frame chapter).
- Using the jack [A], raise the rear wheel off the ground.

○Adjust the length of the jack legs [B], and situate the motorcycle so that it is perpendicular to the ground.

Special Tool - Jack: 57001–1238

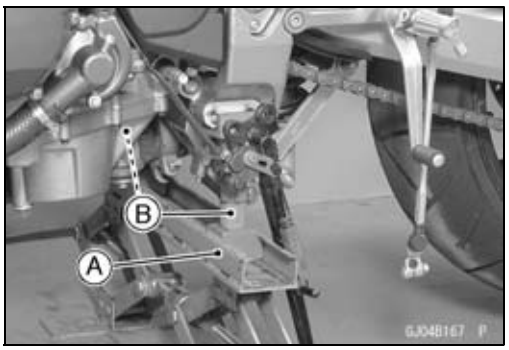

- Remove:
  Cotter Pin [A]
  Axle Nut [B]
  Axle [C]

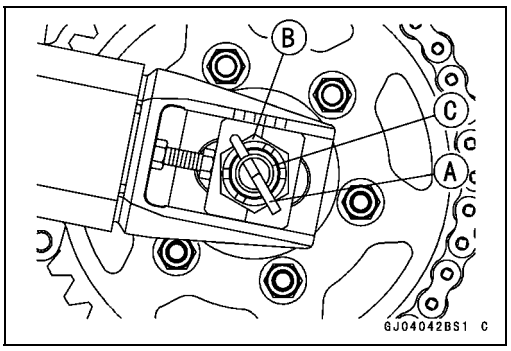

Wheels (Rims)

- Remove the rear caliper mounting bolts and rear caliper.
- Remove the inner fender and chain cover.
- Remove the drive chain [A] from the rear sprocket toward the left.
- Move the rear wheel back and remove it.

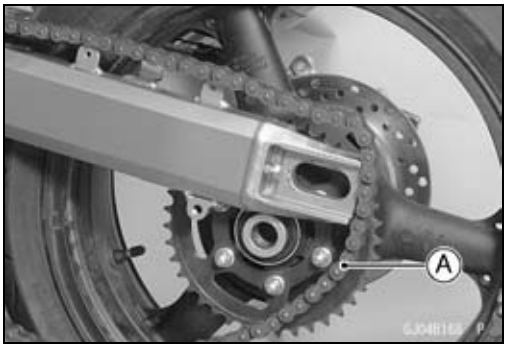

CAUTION

Do not lay the wheel on the ground with the disc facing down. This can damage or warp the disc. Place blocks under the wheel so that the disc does not touch the ground.

Rear Wheel Installation

- Engage the drive chain with the rear sprocket.
- Install the caliper bracket [A] onto the swingarm stop [B].

○Insert the axle from the right side of the wheel, and tighten the axle nut.

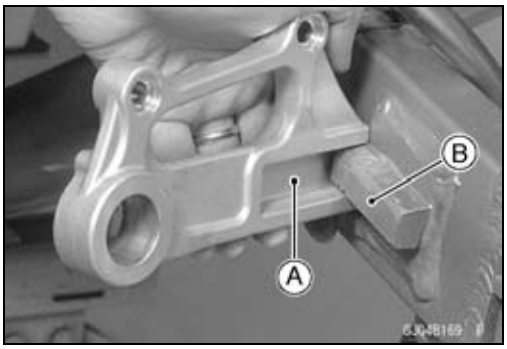

- Insert a new cotter pin [A].

NOTE

○*When inserting the cotter pin, if the slots in the nut do not align with the cotter pin hole in the axle, tighten the nit clockwise [B] up to next alignment.*

○*It should be within 30 degree.*

○*Loosen once and tighten again when the slot goes past the nearest hole.*

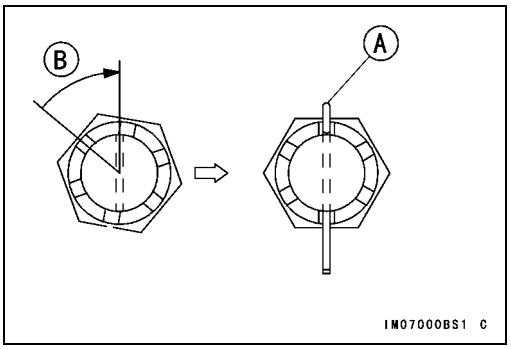

- Bend the cotter pin [A] over the nut [B].

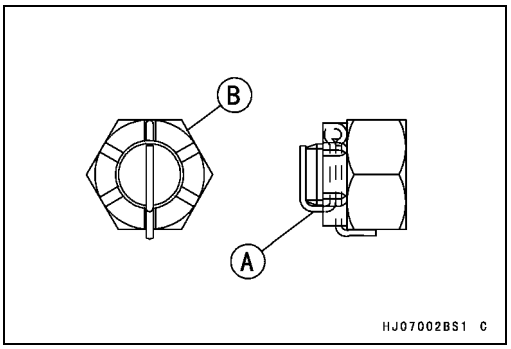

Torque - Rear Axle Nut: 127 N·m (13.0 kgf·m, 94 ft·lb)

- Adjust the drive chain slack after installation (see Final Drive in the Periodic Maintenance chapter).
- Install the rear caliper, chain cover and inner fender.
- Check the rear brake effectiveness.

⚠ WARNING

Do not attempt to drive the motorcycle until a full brake pedal is obtained by pumping the brake pedal until the pads are against the disc. The brake will not function on the first application of the pedal if this is not done.

Wheels (Rims)

Wheel Inspection

- Raise the front/rear wheel off the ground.

  Special Tool - Jack: 57001–1238

- Spin the wheel lightly, and check for roughness or binding.

★If roughness or binding is found, replace the hub bearings.

- Inspect the wheel for small cracks, dents, bending, or warp.

★If there is any damage to the wheel, replace the wheel.

- Remove the wheel, and support it without the tire by the axle.
- Measure the rim runout, radial [A] and axial [B], with a dial gauge.

★If rim runout exceeds the service limit, check the hub bearings.

★If the problem is not due to the bearings, replace the wheel.

Rim Runout

Service Limit:	**Axial**	**0.5 mm (0.02 in.)**
	Radial	**0.8 mm (0.03 in.)**

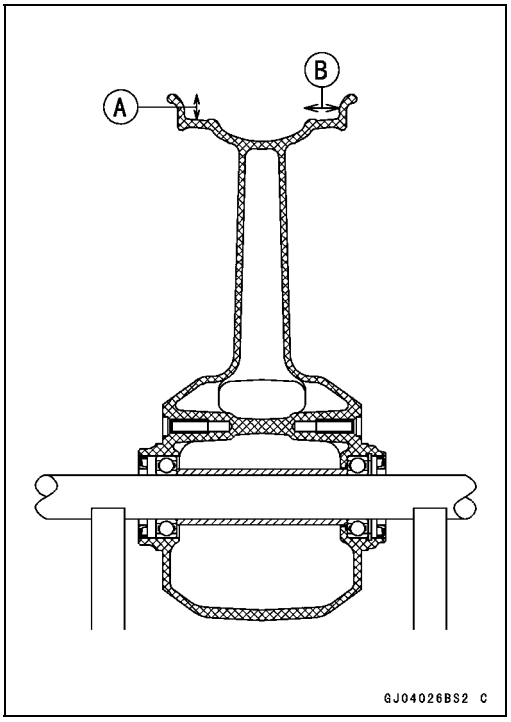

⚠ WARNING

Never attempt to repair a damaged wheel. If there is any damage besides wheel bearings, the wheel must be replaced to insure safe operational condition.

Axle Inspection

- Remove the front and rear axles.
- Visually inspect the front and rear axle for damages.

★If the axle is damaged or bent, replace it.

- Place the axle in V blocks that are 100 mm (3.94 in.) [A] apart, and set a dial gauge [B] on the axle at a point halfway between the blocks. Turn [C] the axle to measure the runout. The difference between the highest and lowest dial readings is the amount of runout.

★If axle runout exceeds the service limit, replace the axle.

Axle Runout/100 mm (3.94 in.)

Standard:	**0.05 mm (0.002 in.) or less**
Service Limit:	**0.2 mm (0.01 in.)**

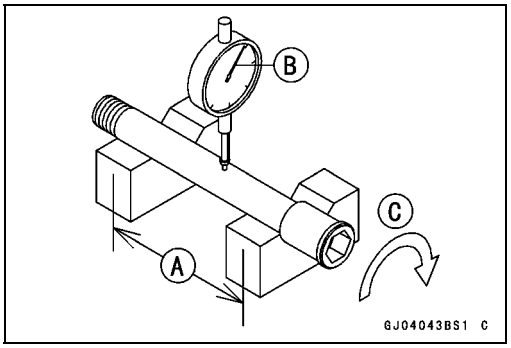

Balance Inspection

- Remove the wheel.
- Support the wheel so that it can be spun freely.
- Spin the wheel lightly, and mark [A] the wheel at the top when the wheel stops.

○Repeat this procedure several times. If the wheel stops of its own accord in various positions, it is well balanced.

★If the wheel always stops in one position, adjust the wheel balance.

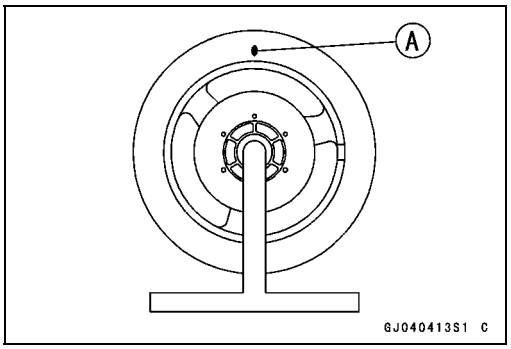

Wheels (Rims)

Balance Adjustment

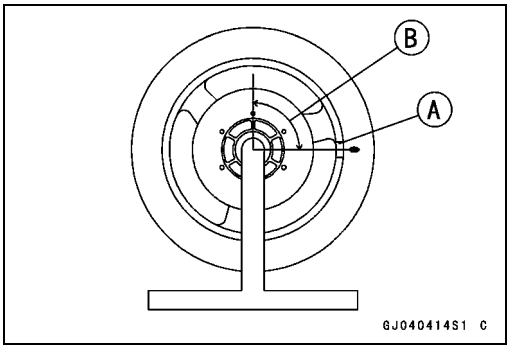

- If the wheel always stops in one position, provisionally attach a balance weight [A] on the rim at the marking using adhesive tape.
- Rotate the wheel 1/4 turn [B], and see whether or not the wheel stops in this position. If it does, the correct balance weight is being used.

★If the wheel rotates and the weight goes up, replace the weight with the next heavier size. If the wheel rotates and the weight goes down, replace the weight with the next lighter size. Repeat these steps until the wheel remains at rest after being rotated 1/4 turn.

- Rotate the wheel another 1/4 turn and then another 1/4 turn to see if the wheel is correctly balanced.
- Repeat the entire procedure as many times as necessary to achieve correct wheel balance.
- Permanently install the balance weight.

Balance Weight Removal

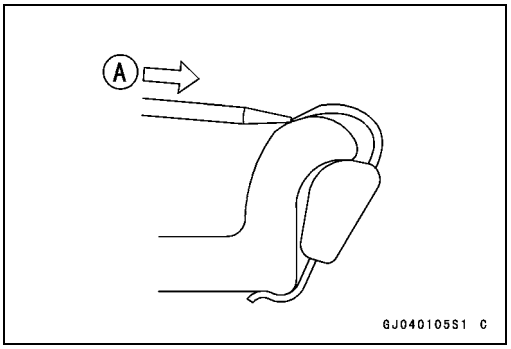

When the tire is not on the rim.

- Push [A] the blade portion toward the outside with a regular tip screw driver, and slip the weight off the rim flange.
- Discard the used balance weight.

When the tire is on the rim.

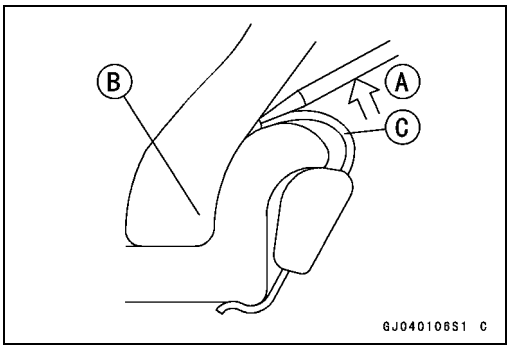

- Pry [A] the balance weight off the rim flange using a regular tip screw driver as shown in the figure.

○Insert a tip of the screw driver between the tire bead [B] and weight blade [C] until the end of the tip reaches the end of the weight blade.

○Push the driver grip toward the tire so that the balance weight slips off the rim flange.

- Discard the used balance weight.

Balance Weight Installation

- Check if the weight portion has any play on the blade and clip.

★If it does, discard it.

⚠ WARNING

If the balance weight has any play on the rim flange, the blade and/or clip have been stretched. Replace the loose balance weight.
Do not reuse used balance weight.
Unbalanced wheels can create an unsafe riding condition.

Wheels (Rims)

- Lubricate the balance weight blade, tire bead, and rim flange with a soap and water solution or rubber lubricant. This helps the balance weight slip onto the rim flange.

CAUTION
Never lubricate with engine oil or petroleum distillates because they will deteriorate the tire.

- When required total weight exceeds 20g (0.71 oz), install the balance weight at both sides of rim flange as shown.

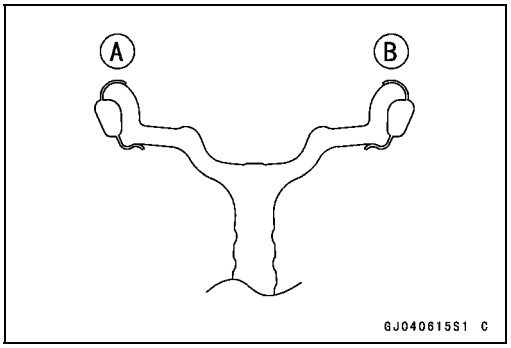

Required Total Weight	Weight Selection	
	One Side [A]	Other Side [B]
20g (0.71 oz)	10g (0.35 oz)	10g (0.35 oz)
30g (1.06 oz)	20g (0.71 oz)	10g (0.35 oz)
40g (1.41 oz)	20g (0.71 oz)	20g (0.71 oz)
50g (1.76 oz)	30g (1.06 oz)	20g (0.71 oz)
60g (2.12 oz)	30g (1.06 oz)	30g (1.06 oz)
70g (2.47 oz)	20g + 20g (0.71oz + 0.71 oz)	30g (1.06 oz)
80g (2.82 oz)	20g + 20g (0.71oz + 0.71 oz)	20g + 20g (0.71oz + 0.71 oz)
90g (3.17 oz)	20g + 30g (0.71 oz + 1.06 oz)	20g + 20g (0.71oz + 0.71 oz)

Balance Weight

Part Number	Weight
41075-1014	10g (0.35 oz)
41075-1015	20g (0.71 oz)
41075-1016	30g (1.06 oz)

NOTE

○*Balance weights are available from Kawasaki dealers in 10, 20, and 30 gram (0.35 oz, 0.71 oz, and 1.06 oz) sizes. An imbalance of less than 10 grams (0.35 oz) will not usually affect running stability.*

○*Do not use four or more balance weight (more than 90 gram). If the wheel requires an excess balance weight, disassemble the wheel to find the cause.*

- Install the balance weight on the rim.

○Slip the weight on the rim flange by pushing or lightly hammering the weight in the direction shown in the figure.

Push or hammer [A] Tire Bead [C]
Rim Flange [B] Blade [D]

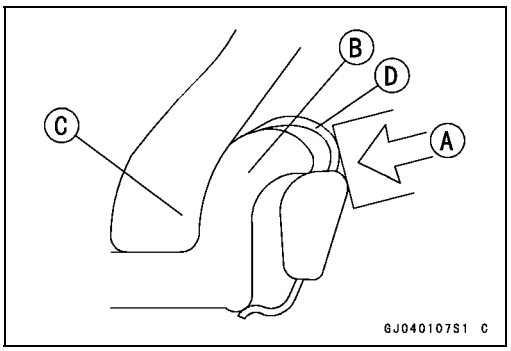

Wheels (Rims)

○Check that the blade [A] and weight [B] seat fully on the rim flange [C], and that the clip [D] is hooked over the rim ridge [E] and reaches rim flat portion.

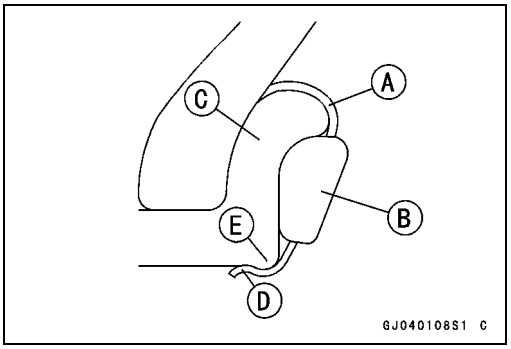

Tires

Air Pressure Inspection/Adjustment

○Refer to the Wheels/Tires in the Periodic Maintenance chapter.

Tire Inspection

○Refer to the Wheels/Tires in the Periodic Maintenance chapter.

Tire Removal

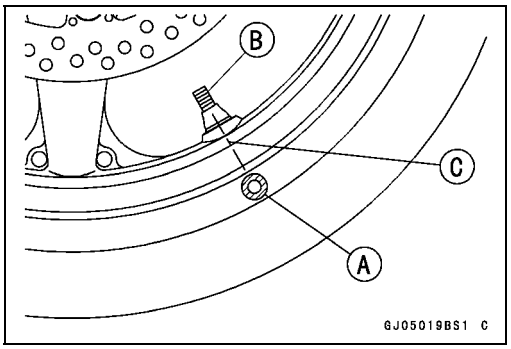

- Remove:
  Wheel (see this chapter)
  Disc(s)
  Valve Core (let out the air)
- To maintain wheel balance, mark the valve stem position on the tire with chalk so that the tire can be reinstalled in the same position.
  Chalk Mark or Yellow Mark [A]
  Air Valve [B]
  Align [C]
- Lubricate the tire beads and rim flanges on both sides with a soap and water solution or rubber lubricant. This helps the tire beads slip off the rim flanges.

CAUTION

Never lubricate with engine oil or petroleum distillates because they will deteriorate the tire.

- Remove the tire from the rim using a suitable commercially available tire changer.

NOTE

○*The tires cannot be removed with hand tools because they fit the rims too tightly.*

Tire Installation

⚠ WARNING

Use the same manufacture's on both front and rear wheels.

- Inspect the rim and tire, and replace them if necessary.
- Clean the sealing surfaces of the rim and tire, and smooth the sealing surfaces of the rim with a fine emery cloth if necessary.
- Remove the air valve and discard it.

CAUTION

Replace the air valve whenever the tire is replaced. Do not reuse the air valve.

Tires

- Install a new valve in the rim.

○Remove the valve cap, lubricate the stem seal [A] with a soap and water solution or rubber lubricant, and pull the valve stem [B] through the rim from the inside out until it snaps into place.

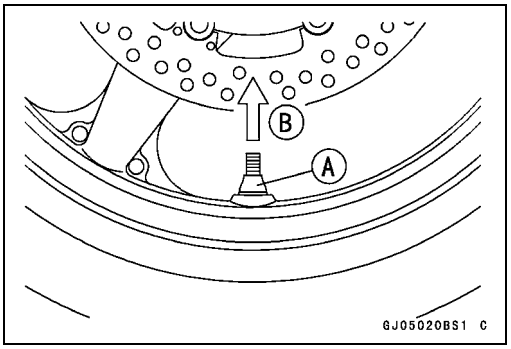

CAUTION

Do not use engine oil or petroleum distillates to lubricate the stem because they will deteriorate the rubber.

○The air valve is shown in the figure.

[A] Valve Cap [C] Stem Seal [E] Valve Seat
[B] Valve Core [D] Valve Stem [F] Valve Opened

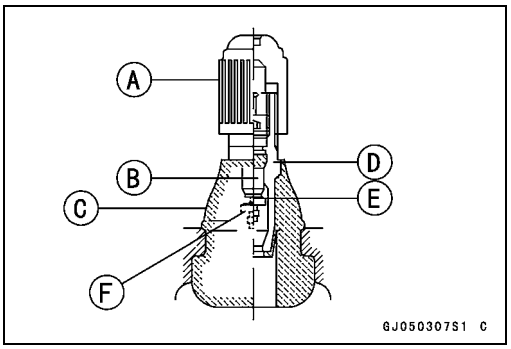

- Apply a soap and water solution, or rubber lubricant to the rim flange and tire beads.
- Check the tire rotation mark on the front and rear tires and install them on the rim accordingly.
  Tire Rotation Mark [A]
  Rotating Direction [B]

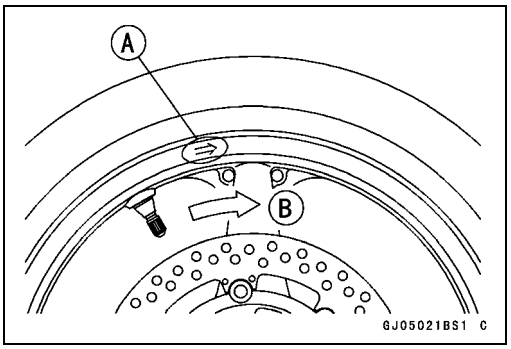

- Position the tire on the rim so that the valve [A] align with the tire balance mark [B] (the chalk mark made during removal, or the yellow paint mark on a new tire).
- Install the tire bead over the rim flange using a suitable commercially available tire changer.
- Lubricate the tire beads and rim flanges with a soap and water solution or rubber lubricant to help seat the tire beads in the sealing surfaces of the rim while inflating the tire.
- Center the rim in the tire beads, and inflate the tire with compressed air until the tire beads seat in the sealing surfaces.

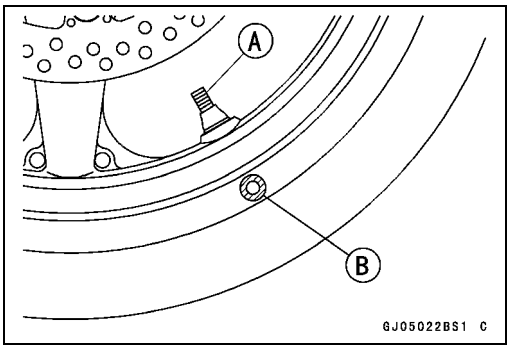

⚠ WARNING

Be sure to install the valve core whenever inflating the tire, and do not inflate the tire to more than 400 kPa (4.0 kgf/cm², 57 psi). Overinflation can explode the tire with possibility of injury and loss of life.

Tires

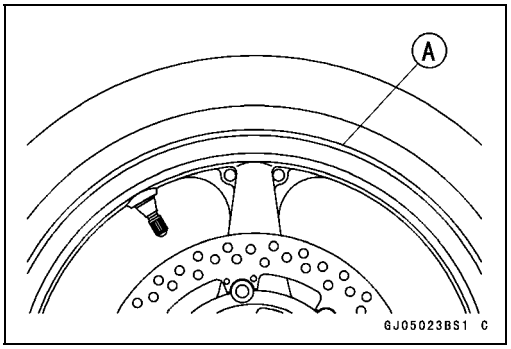

- Check to see that the rim lines [A] on both sides of the tire sidewalls are parallel with the rim flanges.

★If the rim flanges and tire sidewall rim lines are not parallel, remove the valve core.

- Lubricate the rim flanges and tire beads.
- Install the valve core and inflate the tire again.
- After the tire beads seat in the rim flanges, check for air leakage.

○Inflate the tire slightly above standard inflation.

○Use a soap and water solution or submerge the tire, and check for bubbles that would indicate leakage.

- Adjust the air pressure to the specified pressure (see Tire Inspection).
- Install the air valve cap.
- Install the brake disc(s) so that the marked side faces out (see Brakes chapter).
- Adjust the wheel balance (see Balance Adjustment).

Tire Repair

Currently two types of repair for tubeless tires have come into wide use. One type is called a temporary (external) repair which can be carried out without removing the tire from the rim, and the other type is called permanent (internal) repair which requires tire removal. It is generally understood that higher running durability is obtained by permanent (internal) repairs than by temporary (external) ones. Also, permanent (internal) repairs have the advantage of permitting a thorough examination for secondary damage not visible from external inspection of the tire. For these reasons, Kawasaki does not recommend temporary (external) repair. Only appropriate permanent (internal) repairs are recommended. Repair methods may vary slightly from make to make. Follow the repair methods indicated by the manufacturer of the repair tools and materials so that safe results can be obtained.

Hub Bearing

Hub Bearing Removal

- Remove the wheel, and take out the following.
  Collars
  Coupling (out of rear hub)
  Grease Seals
  Circlips [A] (Rear Hub only)

Special Tool - Inside Circlip Pliers: 57001–143 [B]

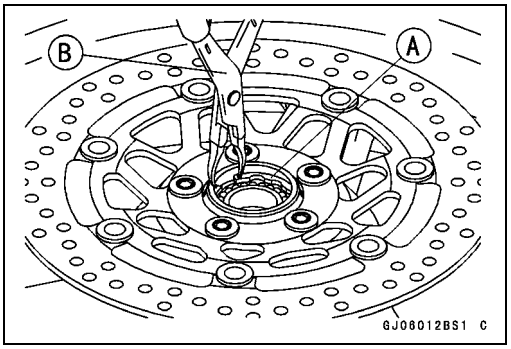

- Use the bearing remover to remove the hub bearing [A].

CAUTION
Do not lay the wheel on the ground with the disc facing down. This can damage or warp the disc. Place blocks under the wheel so that the disc does not touch the ground.

Special Tools - Bearing Remover Shaft, ϕ13: 57001–1377 [B]
Bearing Remover Head, ϕ25 × ϕ28: 57001–1346 [C]

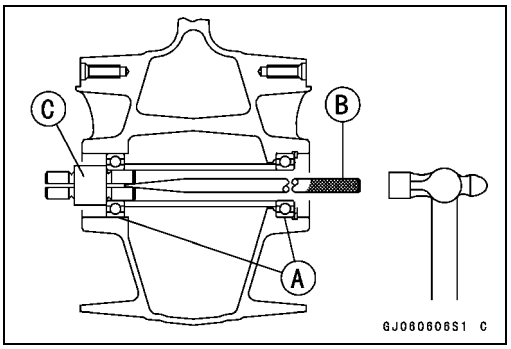

Hub Bearing Installation

- Before installing the wheel bearings, blow any dirt or foreign particles out of the hub with compressed air to prevent contamination of the bearings.
- Replace the bearings with new ones.

NOTE

○*Install the bearings so that the marked side faces out.*

- Install the bearings by using the bearing driver set which does not contact the bearing inner race.
- Press in each right the bearing [A] until they are bottomed.

Special Tool - Bearing Driver Set: 57001–1129 [B]

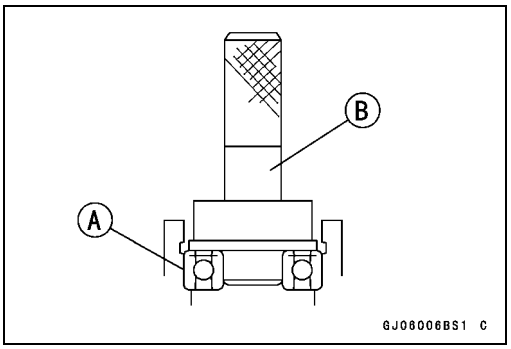

- Replace the circlips with new ones (rear hub only).

Special Tool - Inside Circlip Pliers: 57001–143

- Replace the grease seals with new ones.
- Press in the grease seals [A] so that the seal surface is flush [B] with the end of the hole.

○Apply high temperature grease to the grease seal lips.

Special Tool - Bearing Driver Set: 57001–1129 [C]

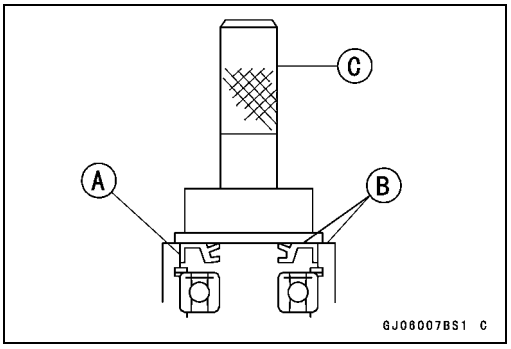

Hub Bearing

Hub Bearing Inspection

Since the hub bearings are made to extremely close tolerances, the clearance can not normally be measured.

NOTE

○*Do not remove any bearings for inspection. If any bearings are removed, they will need to be replaced with new ones.*

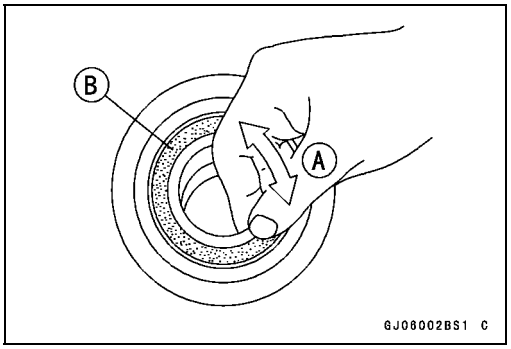

- Turn each bearing in the hub back and forth [A] while checking for plays, roughness, or binding.

★If bearing play, roughness, or binding is found, replace the bearing.

- Examine the bearing seal [B] for tears or leakage.

★If the seal is torn or is leaking, replace the bearing.

Hub Bearing Lubrication

NOTE

○*Since the hub bearings are packed with grease and sealed, lubrication is not required.*

Final Drive

Table of Contents

Exploded View 11-2
Specifications 11-4
Special Tools 11-5
Drive Chain 11-6
- Drive Chain Slack Inspection 11-6
- Drive Chain Slack Adjustment 11-6
- Wheel Alignment Inspection/Adjustment 11-6
- Drive Chain Wear Inspection 11-6
- Drive Chain Lubrication 11-6
- Drive Chain Removal 11-6
- Drive Chain Installation 11-6
- Drive Chain Replacement 11-6

Sprocket, Coupling 11-10
- Engine Sprocket Removal 11-10
- Engine Sprocket Installation 11-10
- Rear Sprocket Removal 11-11
- Rear Sprocket Installation 11-11
- Coupling Installation 11-11
- Coupling Bearing Removal 11-11
- Coupling Bearing Installation 11-12
- Coupling Bearing Inspection 11-12
- Coupling Bearing Lubrication 11-12
- Coupling Damper Inspection 11-12
- Sprocket Wear Inspection 11-13
- Rear Sprocket Warp Inspection 11-13

Exploded View

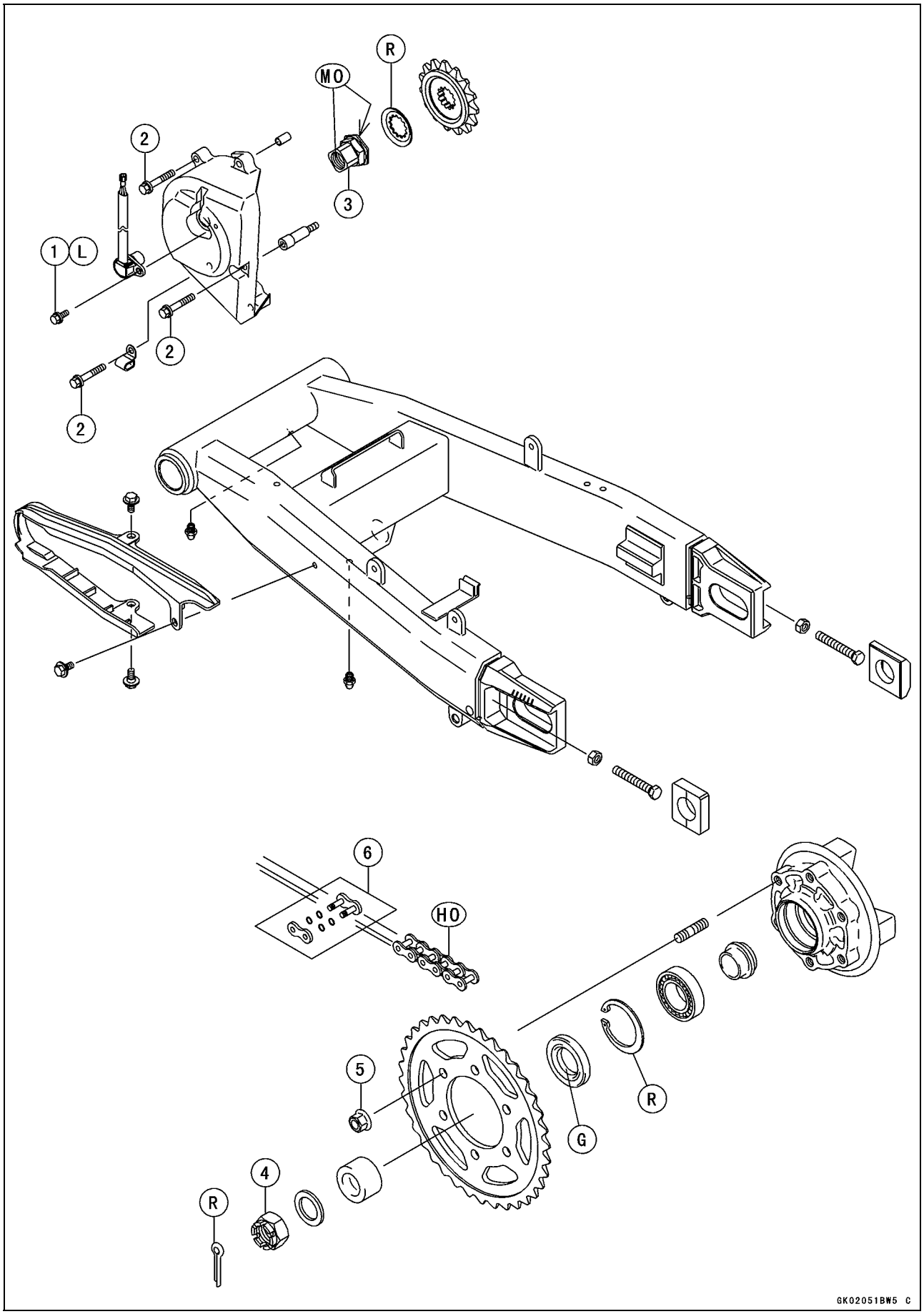

Exploded View

No.	Fastener	Torque			Remarks
		N·m	kgf·m	ft·lb	
1	Speed sensor bolt	3.9	0.40	35 in·lb	L
2	Engine sprocket cover bolts	6.9	0.70	61 in·lb	
3	Engine sprocket nut	125	13.0	92	MO
4	Rear axle nut	127	13.0	94	
5	Rear sprocket nuts	59	6.0	43	

6. Drive chain joint (ZX636–B2 ~)
G: Apply grease.
HO: Apply heavy oil.
L: Apply a non-permanent locking agent.
MO: Apply molybdenum disulfide oil solution.
R: Replacement parts.

Specifications

Item	Standard	Service Limit
Drive Chain:		
Standard chain		
Make	ENUMA	– – –
Type	EK520MVXL, Endless	– – –
Link	108 links	– – –
Sprockets:		
Rear sprocket warp	0.4 mm (0.016 in.) or less	0.5 mm (0.02 in.)

Special Tools

Inside Circlip Pliers:
57001–143

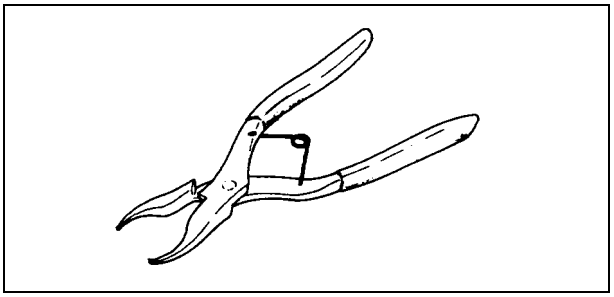

Jack:
57001–1238

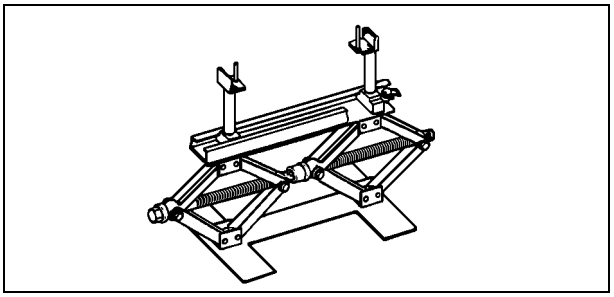

Bearing Driver Set:
57001–1129

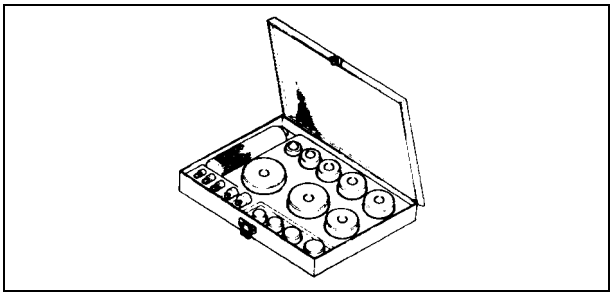

Drive Chain

Drive Chain Slack Inspection

○Refer to the Final Drive in the Periodic Maintenance chapter.

Drive Chain Slack Adjustment

○Refer to the Final Drive in the Periodic Maintenance chapter.

Wheel Alignment Inspection/Adjustment

○Refer to the Final Drive in the Periodic Maintenance chapter.

Drive Chain Wear Inspection

○Refer to the Final Drive in the Periodic Maintenance chapter.

Drive Chain Lubrication

○Refer to the Final Drive in the Periodic Maintenance chapter.

Drive Chain Removal

● Remove:
  Chain Cover/Inner Fender Screws [A]
  Inner Fender (see Frame chapter) [B]
  Chain Cover [C]
  Rear Wheel (see Wheels/Tires chapter)
  Swingarm (see Suspension chapter)
  Engine Sprocket Cover (see Engine Sprocket Removal)

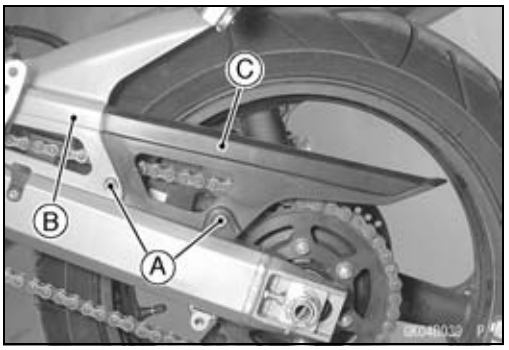

● Disengage the drive chain [A] from the engine sprocket [B], and take it off the chassis.

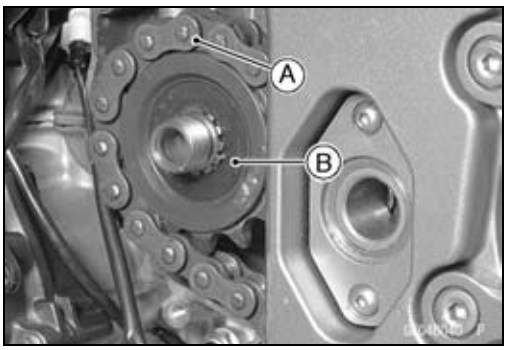

Drive Chain Installation

● Engage the drive chain to the engine sprocket.
● Install:
  Swingarm (see Suspension chapter)
  Rear Wheel (see Wheels/Tires chapter)
  Engine Sprocket Cover (see Engine Sprocket Installation)
  Chain Cover
  Inner Fender

○Fit the flap [A] of the chain cover into the slot [B] in the swingarm.

● Adjust the drive chain slack after installing the chain (see Final Drive in the Periodic Maintenance chapter).

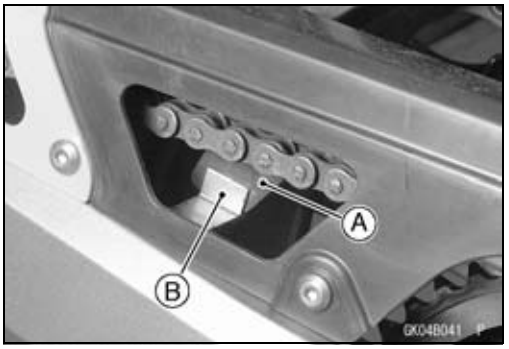

Drive Chain Replacement

● Remove:
  Chain Cover (see Drive Chain Removal)
  Engine Sprocket Cover (see Engine Sprocket Removal)

Drive Chain

EK JOINT TOOL #50
Body [A]
Handlebar [B]
Cutting and Riveting Pin [C]
For Cutting [D]
For Riveting [E]
Plate Holder (A) [F]
Plate Holder (B) [G]
Gauge [H]

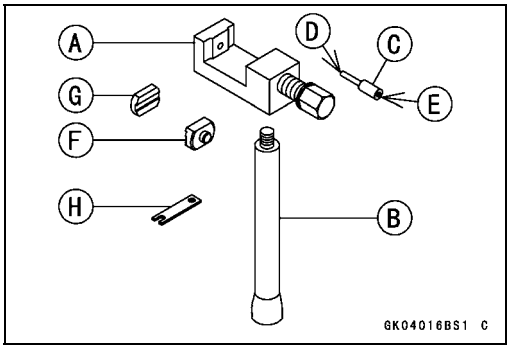

- Grind [A] pin head to make it flat.
- Set cutting and riveting pin [B] as shown.

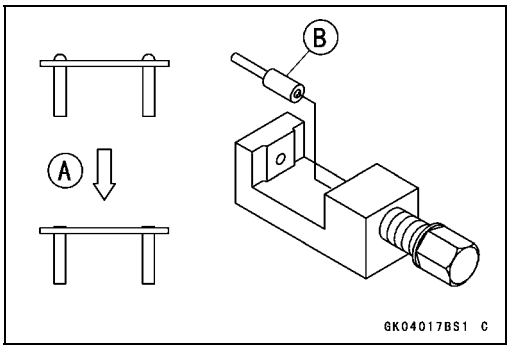

- Screw pin holder until it touches chain pin.
- Be sure that cutting pin hits center of chain pin.

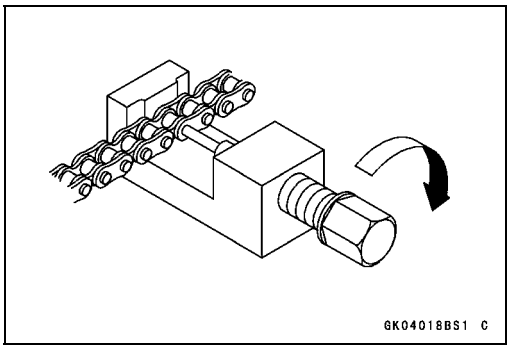

- Screw handlebar [A] into body.
- Turn pin holder with wrench [B] clockwise to extract chain pin.

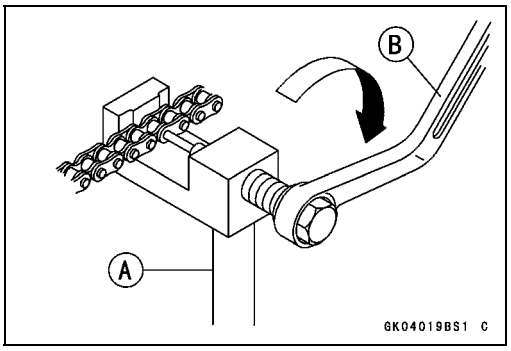

- Replace the link pin, link plate and grease seals.
- Apply grease to the link pins [A] and grease seals [B] [C].
- Engage the drive chain on the engine and rear sprockets.
- Insert the link pins in the drive chain ends.
- Install the grease seals [C].
- Install the link plate so that the mark [D] faces out.
- Push link plate by hand or plier to fix it.
- In case of grease seal chain, be sure to set grease seals correctly.

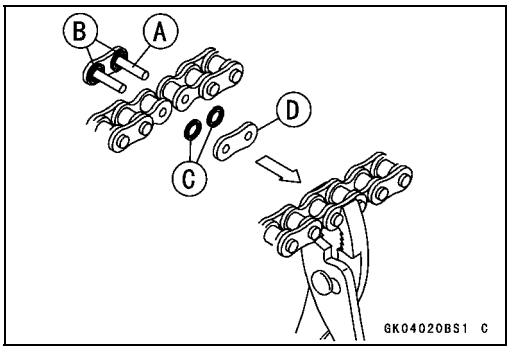

- Set plate holder (A) [A] and plate holder (B) [B] on the body.

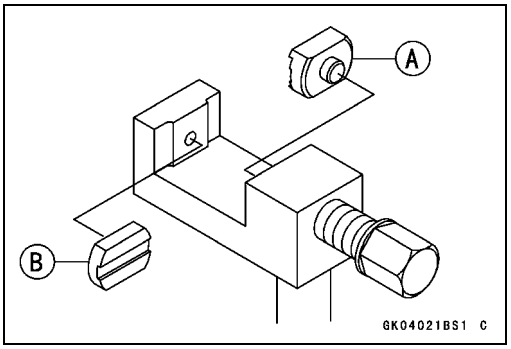

- Fit plate holder (A) to link plate.
- Turn pin holder by hand until plate holder (B) touches the other link plate.

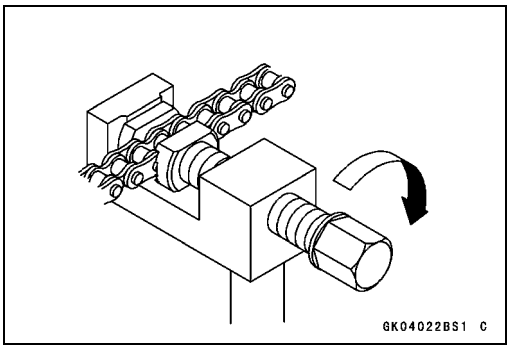

- Turn pin holder by wrench clockwise until two pins of link come into groove of plate holder (A).
- Take off plate holder.

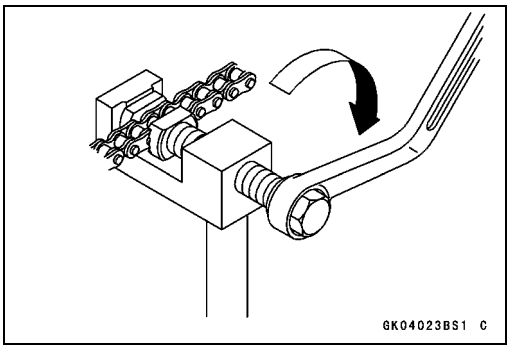

- Set plate holder (B) [A] and cutting and riveting pin [B] as shown.

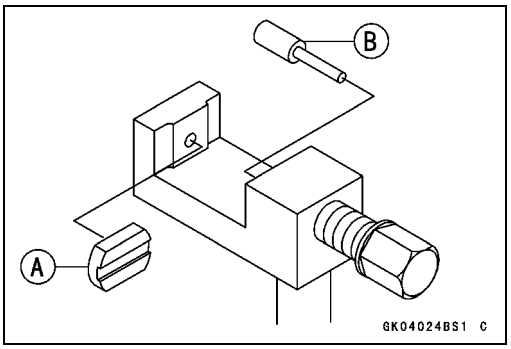

- Turn pin holder until riveting pin touches link pin.

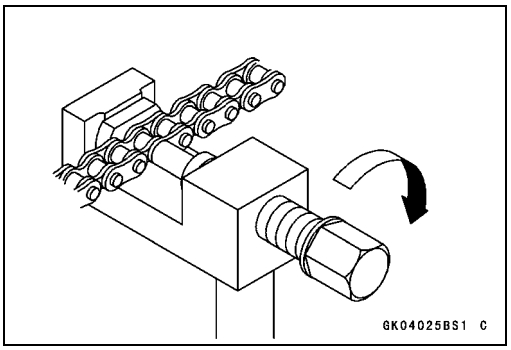

Drive Chain

- Turn wrench clockwise until tip of riveting pin hits of link pin.
- Rivet it.
- Some work for the other link pin.

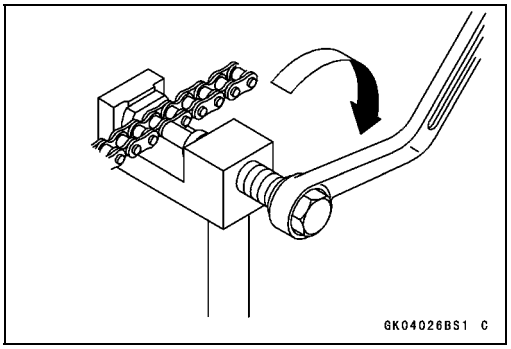

- After staking, check the staked area of the link pin for cracks.
- Measure the outside diameter [A] of the link pin and link plates width [B].

Link Pin Outside Diameter
Standard: 5.6 ~ 6.0 mm (0.22 ~ 0.24 in.)

Link Plates Outside Width
Standard: 17.45 ~ 17.60 mm (0.687 ~ 0.693 in.)

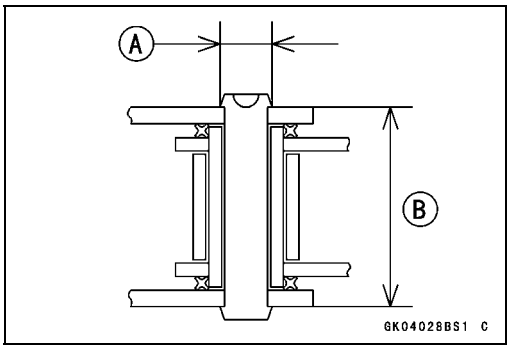

★If the reading exceeds the specified length, cut and rejoin the chain again.

- Check:
  Movement of the Rollers
- Adjust the drive chain slack after installing the chain (see Final Drive in the Periodic Maintenance chapter).

Sprocket, Coupling

Engine Sprocket Removal

- Remove:
  Speed Sensor Bolt [A]
  Speed Sensor [B]
  Engine Sprocket Cover Bolts [C]
  Engine Sprocket Cover [D]

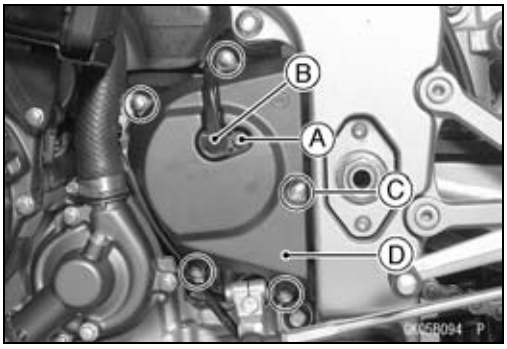

- Flatten out the bended washer [A].
- Remove the engine sprocket nut [B] and washer.

NOTE

○*When loosening the engine sprocket nut, hold the rear brake on.*

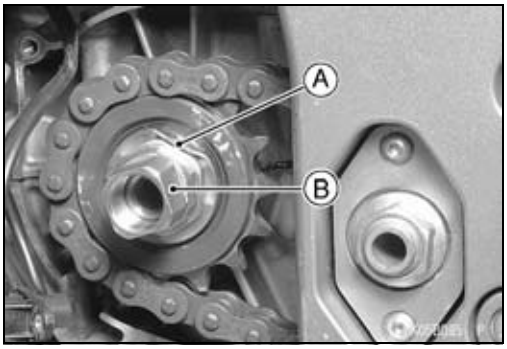

- Using the jack, raise the rear wheel off the ground.

  Special Tool - Jack : 57001–1238
- Remove the axle cotter pin, and loosen the rear axle nut.
- Loosen the both chain adjuster locknut to loosen the drive chain.
- Remove the drive chain from the rear sprocket toward the right.
- Disengage the drive chain [A] from the engine sprocket [B].
- Pull the engine sprocket off the output shaft [C].

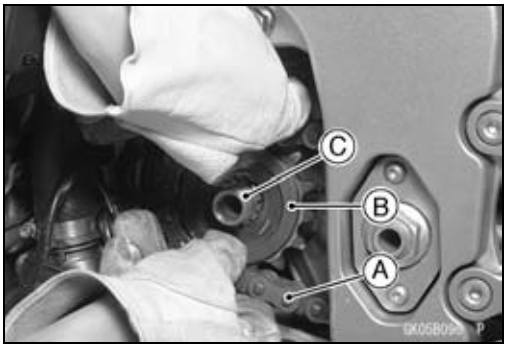

Engine Sprocket Installation

- Replace the sprocket washer and axle cotter pin.
- Install the engine sprocket onto the shaft so that the mark side [A] faces outwards.
- Apply molybdenum disulfide oil to the threads of the output shaft and the seating surface of the engine sprocket nut.
- After torquing the engine sprocket nut, bend the one side of the washer over the nut.

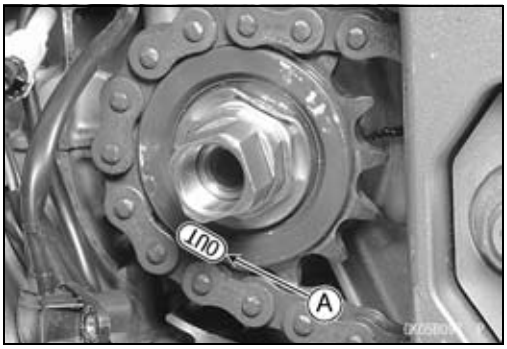

NOTE

○*Tighten the nut while applying the rear brake.*

Torque - Engine Sprocket Nut : 125 N·m (13.0 kgf·m, 92 ft·lb)

- Adjust the drive chain slack after installing the sprocket (see Final Drive in the Periodic Maintenance chapter).
- Install the engine sprocket cover, and tighten the bolts.

  Torque - Engine Sprocket Cover Bolts: 6.9 N·m (0.70 kgf·m, 61 in·lb)
- Apply a non-permanent locking agent to the threads of the speed sensor bolt, and tighten it.

  Torque - Speed Sensor Bolt: 3.9 N·m (0.40 kgf·m, 35 in·lb)
- Bend the end of axle cotter pin surely after tightening the axle nut.

Sprocket, Coupling

Rear Sprocket Removal

- Remove the rear wheel (see Wheels/Tires chapter).

CAUTION

Do not lay the wheel on the ground with the disc facing down. This can damage or warp the disc. Place blocks under the wheel so that the disc does not touch the ground.

- Remove the rear sprocket nuts [A].
- Remove the rear sprocket [B].

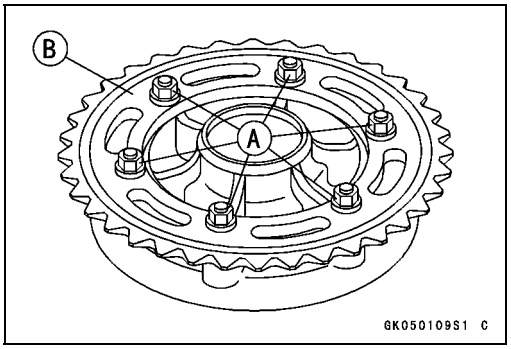

Rear Sprocket Installation

- Install the sprocket facing the tooth number marking [A] outward.
- Tighten the rear sprocket nuts.

  Torque - Rear Sprocket Nut : 59 N·m (6.0 kgf·m, 43 ft·lb)

- Install the rear wheel (see Wheels/Tires chapter).

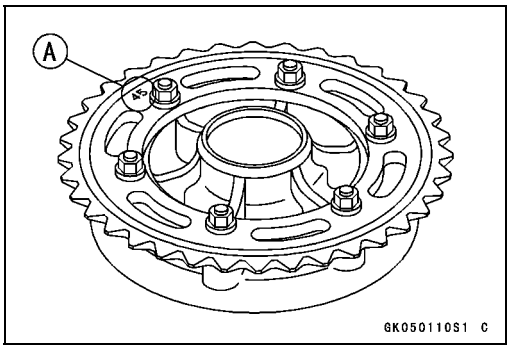

Coupling Installation

- Grease the following and install the coupling.
  Coupling Grease Seal [A]
  Coupling Internal Surface [B]
  Ball Bearing [C]

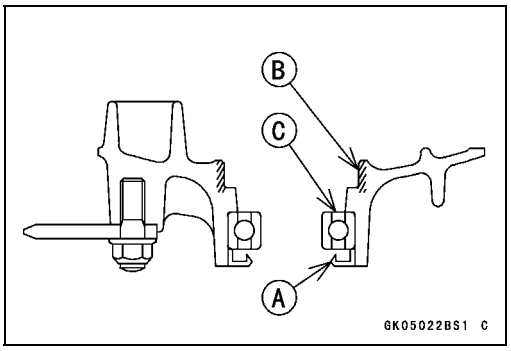

Coupling Bearing Removal

- Remove:
  Coupling
  Grease Seal
  Circlip [A]

  Special Tool - Inside Circlip Pliers: 57001–143 [B]

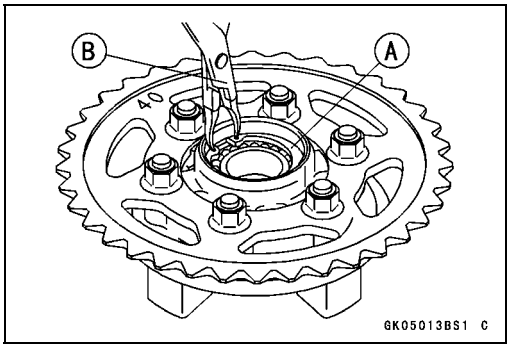

- Remove the bearing [A] by tapping from the wheel side.

  Special Tool - Bearing Driver Set: 57001–1129 [B]

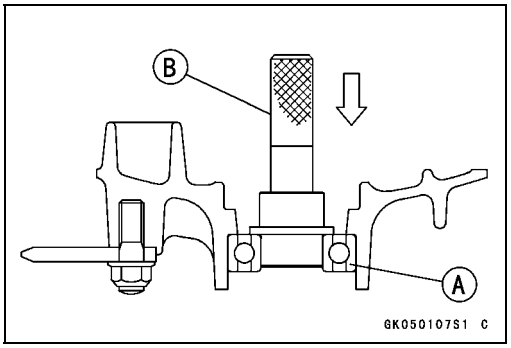

Sprocket, Coupling

Coupling Bearing Installation

- Replace the bearing with a new one.
- Press in the bearing [A] until it is bottomed.

Special Tool - Bearing Driver Set: 57001–1129 [B]

- Pack the bearing with high temperature grease.
- Replace the circlip with a new one.

Special Tool - Inside Circlip Pliers: 57001–143

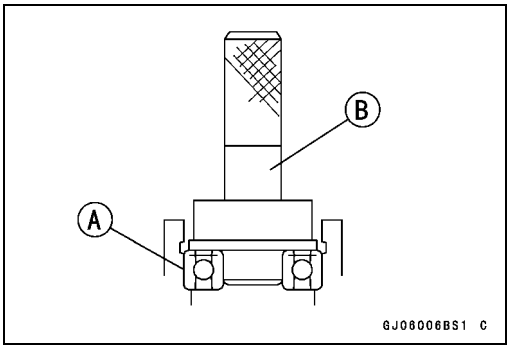

- Replace the grease seal with a new one.
- Press in the grease seal so that the seal surface is flush with the end of the hole.

○Apply high temperature grease to the grease seal lips.

Special Tool - Bearing Driver Set : 57001–1129

Coupling Bearing Inspection

Since the coupling bearing is made to extremely close tolerances, the clearance can not normally be measured.

NOTE

○*It is not necessary to remove the coupling bearing for inspection. If the bearing is removed, it will need to be replaced with a new one.*

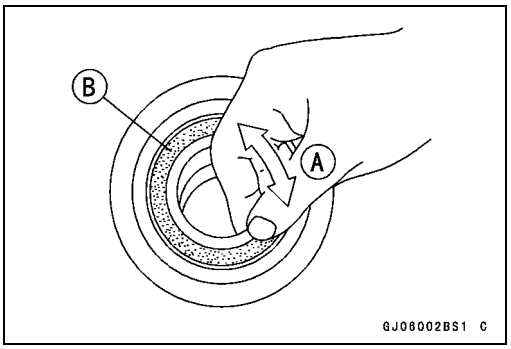

- Turn the bearing in the coupling back and forth [A] while checking for plays, roughness, or binding.

★If bearing play, roughness, or binding is found, replace the bearing.

- Examine the bearing seal [B] for tears or leakage.

★If the seal is torn or is leaking, replace the bearing.

Coupling Bearing Lubrication

- Pack the bearing with good quality bearing grease. Turn the bearing around by hand a few times to make sure the grease is distributed uniformly inside the bearing.

Coupling Damper Inspection

- Remove the rear wheel coupling, and inspect the rubber dampers [A].
- Replace the damper if it appears damaged or deteriorated.

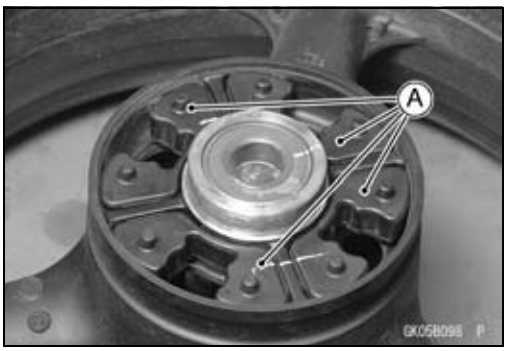

Sprocket, Coupling

Sprocket Wear Inspection

- Visually inspect the engine and rear sprocket teeth for wear and damage.

★If the teeth are worn as illustrated, replace the sprocket, and inspect the drive chain wear (see Final Drive in the Periodic Maintenance chapter).

[A] Worn Tooth (Engine Sprocket)
[B] Worn Tooth (Rear Sprocket)
[C] Direction of Rotation

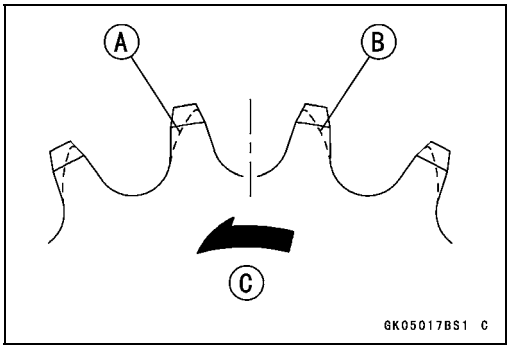

NOTE

○*If a sprocket requires replacement, the chain is probably worn also.*
When replacing a sprocket, inspect the chain.

Rear Sprocket Warp Inspection

- Raise the rear wheel off the ground (see Wheels/Tires chapter) so that it will turn freely.
- Set a dial gauge [A] against the rear sprocket [B] near the teeth as shown, and rotate [C] the rear wheel to measure the sprocket runout (warp). The difference between the highest and lowest dial gauge readings is the amount of runout (warp).

★If the runout exceeds the service limit, replace the rear sprocket.

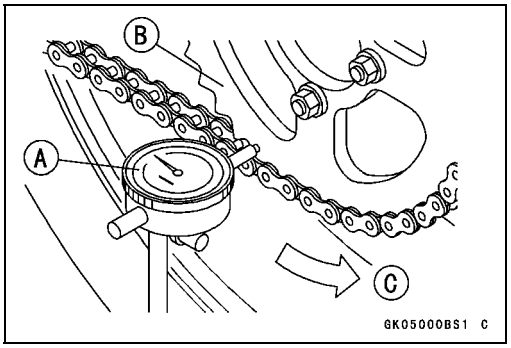

Rear Sprocket Warp

Standard:	**0.4 mm (0.016 in.) or less**
Service Limit:	**0.5 mm (0.02 in.)**

Brakes

Table of Contents

Exploded View 12-2
Specifications 12-6
Special Tools 12-7
Brake Pedal 12-8
Brake Lever Position Adjustment. 12-8
Brake Pedal Position Inspection . 12-8
Brake Pedal Position Adjustment 12-8
Calipers 12-9
Front Caliper Removal 12-9
Rear Caliper Removal..... 12-9
Caliper Installation 12-9
Front Caliper Disassembly..... 12-10
Front Caliper Assembly..... 12-11
Rear Caliper Disassembly 12-11
Rear Caliper Assembly 12-12
Caliper Fluid Seal Damage..... 12-13
Caliper Dust Seal/Friction Boot Damage..... 12-13
Caliper Piston and Cylinder Damage..... 12-13
Caliper Holder Shaft Wear 12-14
Brake Pads 12-15
Front Brake Pad Removal..... 12-15
Front Brake Pad Installation..... 12-15
Rear Brake Pad Removal 12-15
Rear Brake Pad Installation 12-16
Brake Pad Wear Inspection 12-16
Master Cylinder 12-17
Front Master Cylinder Removal ... 12-17
Front Master Cylinder Installation 12-17
Rear Master Cylinder Removal.... 12-17
Rear Master Cylinder Installation. 12-18
Front Master Cylinder Disassembly..... 12-18
Rear Master Cylinder Disassembly..... 12-18
Master Cylinder Assembly 12-19
Master Cylinder Inspection 12-19
Brake Disc 12-21
Brake Disc Removal 12-21
Brake Disc Installation 12-21
Brake Disc Wear 12-21
Brake Disc Warp 12-21
Brake Fluid 12-22
Level Inspection 12-22
Brake Fluid Change 12-22
Bleeding the Brake Line..... 12-22
Brake Hose..... 12-23
Brake Hose Removal/Installation. 12-23
Brake Hose Inspection..... 12-23

Exploded View

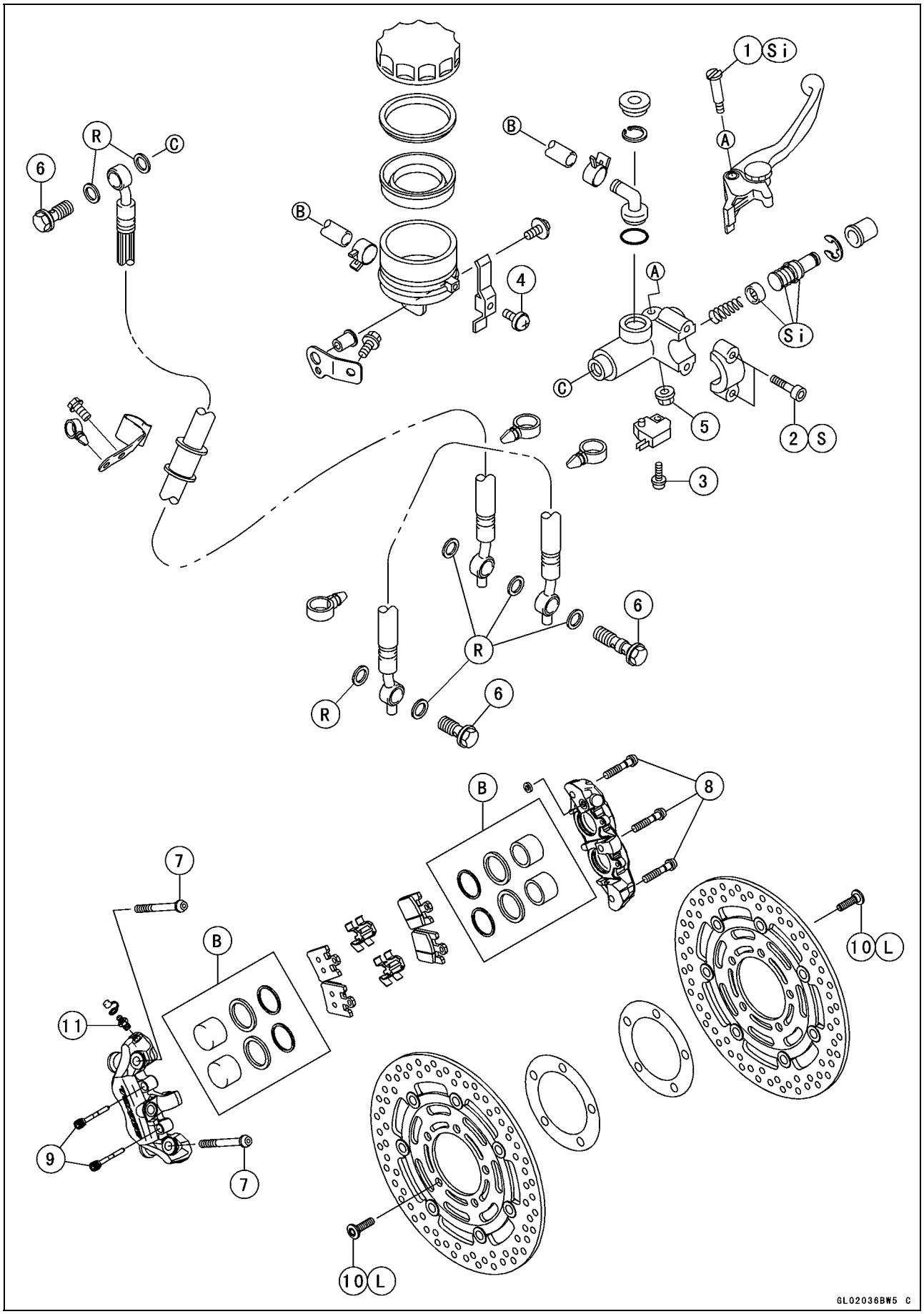

Exploded View

No.	Fastener	Torque			Remarks
		N·m	kgf·m	ft·lb	
1	Brake lever pivot bolt	1.0	0.10	89 in·lb	Si
2	Front master cylinder clamp bolts	8.8	0.90	78 in·lb	S
3	Front brake light switch screw	1.2	0.12	10 in·lb	
4	Front brake reservoir cap stopper screw	1.2	0.12	10 in·lb	
5	Brake lever pivot bolt locknut	6.0	0.61	53 in·lb	
6	Brake hose banjo bolts	25	2.5	18	
7	Front caliper mounting bolts	34	3.5	25	
8	Front caliper assembly bolts	22	2.2	16	
9	Front brake pad pins	15	1.5	11	
10	Front brake disc mounting bolts	27	2.8	20	L
11	Bleed valves	7.8	0.80	69 in·lb	

B: Apply brake fluid.
R: Replacement Parts
S: Follow the specific tightening sequence.
Si: Apply silicone grease (ex. PBC grease).
L: Apply a non-permanent locking agent.

Exploded View

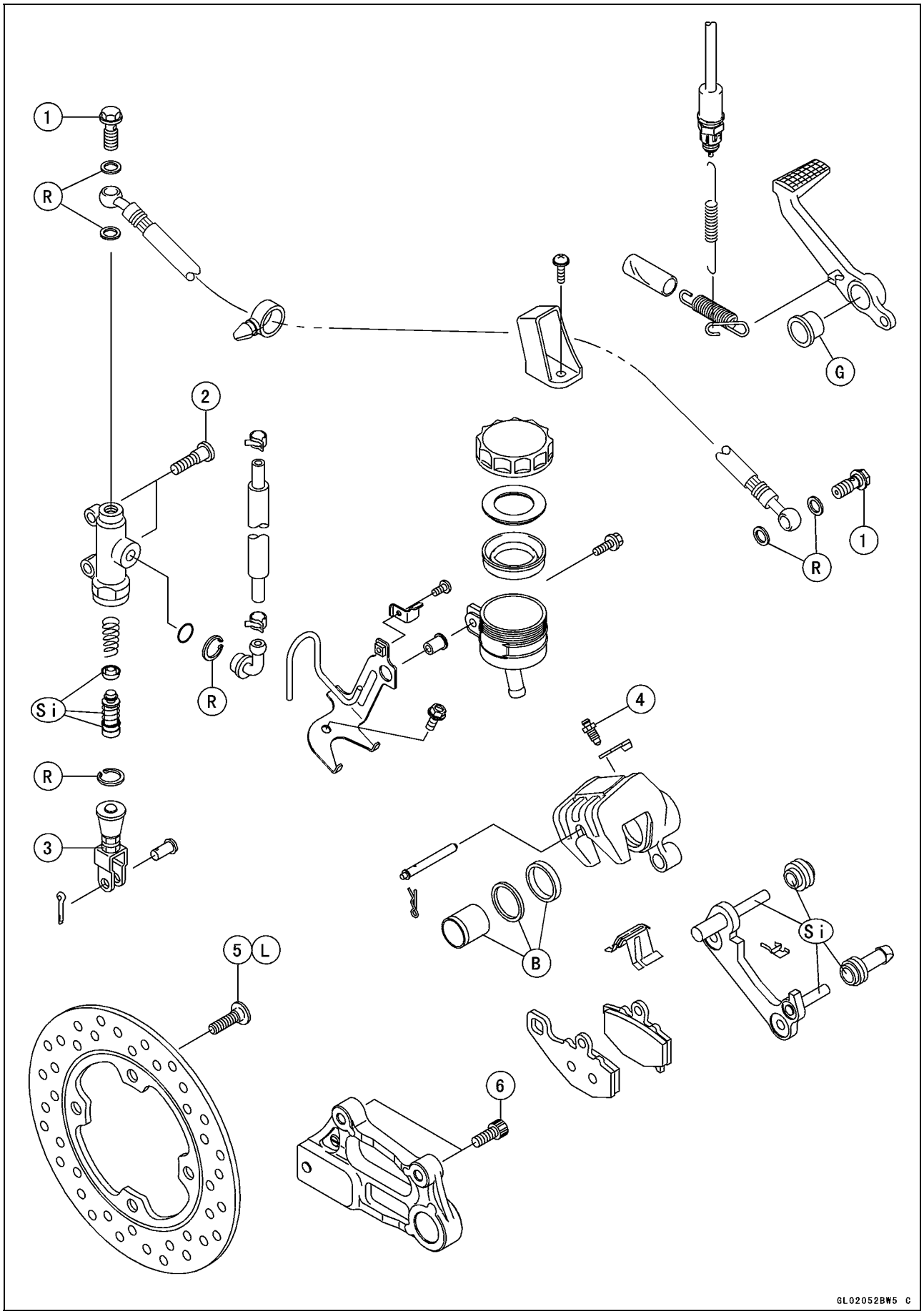

Exploded View

No.	Fastener	Torque			Remarks
		N·m	kgf·m	ft·lb	
1	Brake hose banjo bolts	25	2.5	18	
2	Rear master cylinder mounting bolts	25	2.5	18	
3	Rear master cylinder push rod locknut	18	1.8	13	
4	Bleed valve	7.8	0.80	69 in·lb	
5	Rear brake disc mounting bolts	27	2.8	20	L
6	Rear caliper mounting bolts	25	2.5	18	

B: Apply brake fluid.
G: Apply grease.
R: Replacement Parts
Si: Apply silicone grease (ex. PBC grease).
L: Apply a non-permanent locking agent.

Specifications

Item	Standard	Service Limit
Brake Lever, Brake Pedal:		
Brake lever position	5-way adjustable (to suit rider)	- - -
Brake lever free play	Non-adjustable	- - -
Pedal free play	Non-adjustable	- - -
Pedal position	About 45 mm (1.8 in.) below footpeg top	- - -
Brake Discs:		
Thickness		
Front	5.8 ~ 6.2 mm (0.23 ~ 0.24 in.)	5.5 mm (0.22 in.)
Rear	4.8 ~ 5.2 mm (0.19 ~ 0.20 in.)	4.5 mm (0.18 in.)
Runout	0.15 mm (0.006 in.) or less	0.3 mm (0.01 in.)

Special Tools

Inside Circlip Pliers:
57001–143

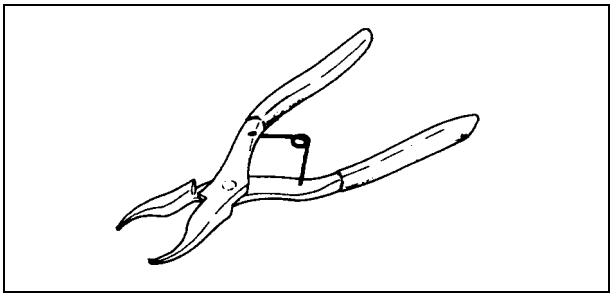

Jack:
57001–1238

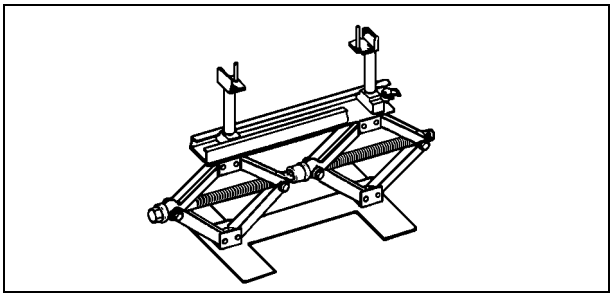

Brake Pedal

Brake Lever Position Adjustment

The brake lever adjuster has 5 positions so that the brake lever position can be adjusted to suit the operator's hand.

- Push the lever forward and turn the adjuster [A] to align the number with the arrow mark [B] on the lever holder.

○The distance from the grip to the lever is minimum at number 5 and maximum at number 1.

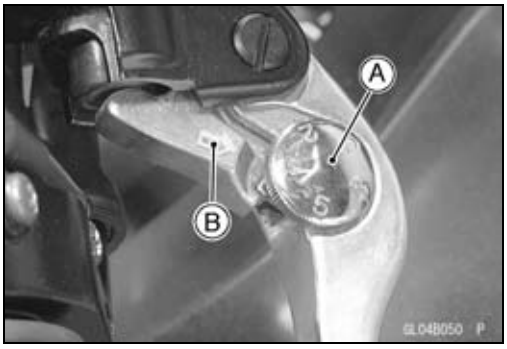

Brake Pedal Position Inspection

- Check that the brake pedal [A] is in the correct position.
  [B] Footpeg

Pedal Position

Standard:	**About 45 mm (1.8 in.) [C] below top of footpeg**

★If it is incorrect, adjust the brake pedal position.

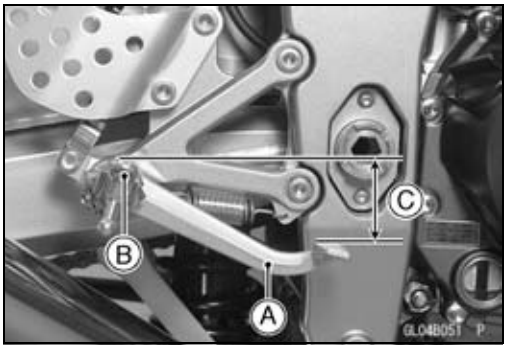

Brake Pedal Position Adjustment

NOTE

○*Usually it is not necessary to adjust the pedal position, but always adjust it when push rod locknut has been loosened.*

- Remove the rear master cylinder cover [B], and then tighten the master cylinder bolts [A] only.

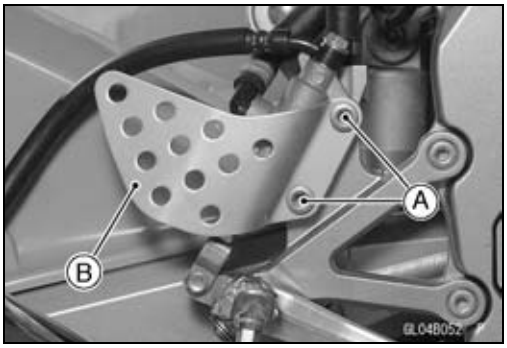

- Loosen the locknut [A] and turn the push rod with the hex head [B] to achieve the correct pedal position.

★If the length [C] shown is **67 ± 1 mm (2.6 ± 0.04 in.)**, the pedal position will be within the standard range.

- Tighten:

Torque - Rear Master Cylinder Push Rod Locknut: 18 N·m (1.8 kgf·m, 13 ft·lb)

- Check the brake light switch operation (see Brakes in the Periodic Maintenance chapter).

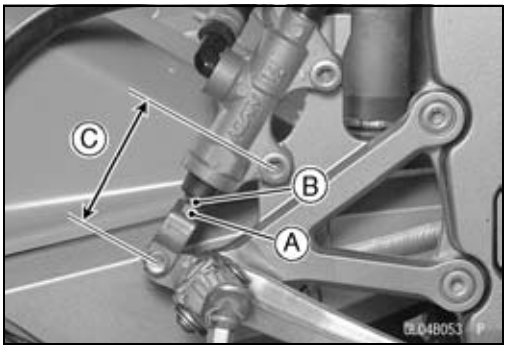

Calipers

Front Caliper Removal

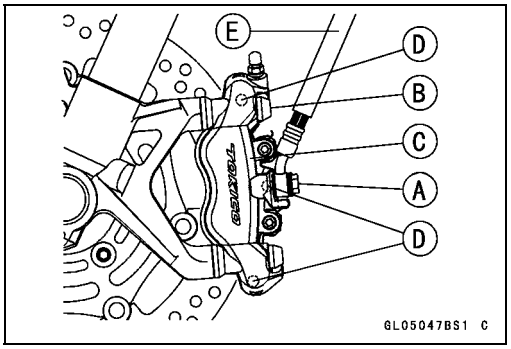

- Loosen the banjo bolt [A] at the brake hose lower end, and tighten it loosely.
- Unscrew the caliper mounting bolts [B], and detach the caliper [C] from the disc.

CAUTION
Do not loosen the caliper assembly bolts [D]. Take out only the caliper mounting bolts for caliper removal. Loosening the caliper assembly bolts will cause brake fluid leakage.

- Unscrew the banjo bolt and remove the brake hose [E] from the caliper (see Brake Hose Removal/Installation).

CAUTION
Immediately wash away any brake fluid that spills.

NOTE

○*If the caliper is to be disassembled after removal and if compressed air is not available, disassemble the caliper before the brake hose is removed (see Front Caliper Disassembly).*

Rear Caliper Removal

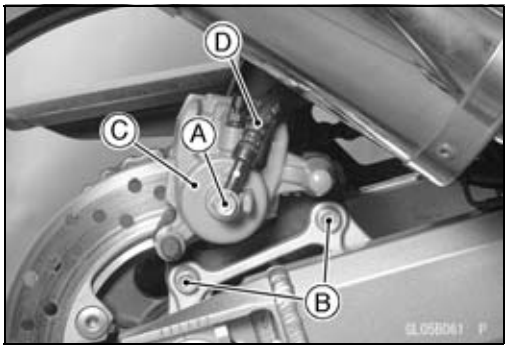

- Loosen the banjo bolt [A] at the brake hose lower end, and tighten it loosely.
- Unscrew the caliper mounting bolts [B], and detach the caliper [C] from the disc.
- Unscrew the banjo bolt and remove the brake hose [D] from the caliper (see Brake Hose Removal/Installation).

CAUTION
Immediately wash away any brake fluid that spills.

NOTE

○*If the caliper is to be disassembled after removal and if compressed air is not available, disassemble the caliper before the brake hose is removed (see Rear Caliper Disassembly).*

Caliper Installation

- Install the caliper and brake hose lower end.

○Replace the washers on each side of hose fitting with new ones.

- Tighten:

Torque - Caliper Mounting Bolts (Front): 34 N·m (3.5 kgf·m, 25 ft·lb)
Caliper Mounting Bolts (Rear): 25 N·m (2.5 kgf·m, 18 ft·lb)
Brake Hose Banjo Bolt: 25 N·m (2.5 kgf·m, 18 ft·lb)

- Check the fluid level in the brake reservoirs.
- Bleed the brake line (see Brakes in the Periodic Maintenance chapter).
- Check the brake for good braking power, no brake drag, and no fluid leakage.

Calipers

⚠ WARNING

Do not attempt to drive the motorcycle until a full brake lever or pedal is obtained by pumping the brake lever or pedal until the pads are against the disc. The brakes will not function on the first application of the lever or pedal if this is not done.

Front Caliper Disassembly

- Loosen the front caliper assembly bolt [A] and banjo bolt [B], and tighten them loosely.
- Remove:
  Front Caliper [C] (see Front Caliper Removal)
  Brake Pads (see Front Brake Pad Removal)
  Front Caliper Assembly Bolts
  O-rings

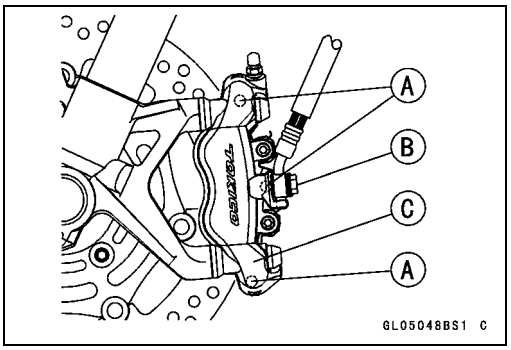

- Using compressed air, remove the pistons. One way to remove the pistons is as follows.

○Install a rubber gasket [A] and a wooden board [B] more than 10 mm (0.4 in.) thick on the caliper half, and fasten them together with a suitable bolt and nut as shown. Leave one of the oil passages [C] open.

○Lightly apply compressed air [D] to the oil passage until the pistons hit the rubber gasket. Block the hose joint opening [E] during this operation if the caliper half has the opening.
  Bolt and Nut [F]
  Oil Passage sealed by Rubber Gasket. [G]
  Push down. [H]

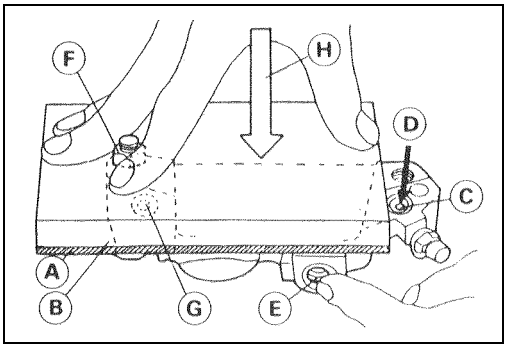

⚠ WARNING

To avoid serious injury, never place your fingers or palm in front of the piston. If you apply compressed air into the caliper, the piston may crush your hand or fingers.

○Pull out the pistons by hand.

- Remove the dust seals [A] and fluid seals [B].
- Remove the bleed valve [C] and rubber cap [D].
- Repeat the previous step to remove the pistons from the other side of the caliper body.

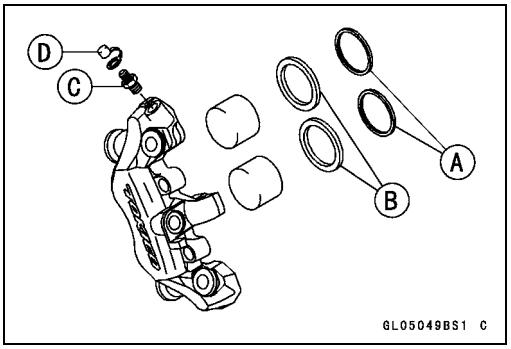

NOTE

○*If compressed air is not available, do as follows for both calipers coincidentally, with the brake hose connected to the caliper.*

○*Prepare a container for brake fluid, and perform the work above it.*

○*Remove the spring and pads (see Front Brake Pad Removal).*

○*Pump the brake lever until the pistons come out of the cylinders, and then disassemble the caliper.*

Calipers

Front Caliper Assembly

- Clean the caliper parts except for the pads.

CAUTION

For cleaning of the parts, use only disc brake fluid, isopropyl alcohol, or ethyl alcohol.

- Install the bleed valve and rubber cap.

  Torque - Bleed Valve: 7.8 N·m (0.80 kgf·m, 69 in·lb)

- Replace the fluid seals [A] with new ones.
  - ○Apply brake fluid to the fluid seals, and install them into the cylinders by hand.
- Replace the dust seals [B] with new ones if they are damaged.
  - ○Apply brake fluid to the dust seals, and install them into the cylinders by hand.

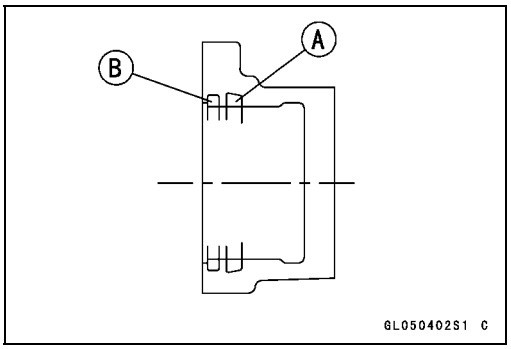

- Replace the O–rings [A] if they are damaged.
- Apply brake fluid to the outside of the pistons, and push them into each cylinder by hand.
- Be sure to install the O-rings.
- Tighten the caliper assembly bolts.

  Torque - Front Caliper Assembly Bolts: 22 N·m (2.2 kgf·m, 16 ft·lb)

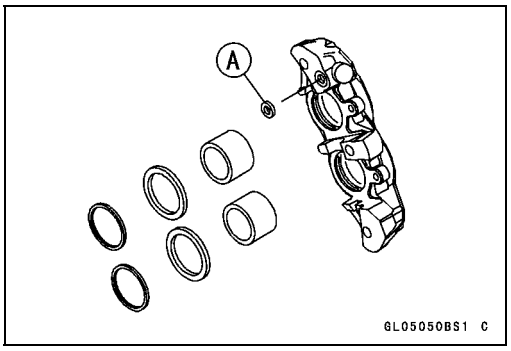

- Install the pads (see Front Brake Pad Installation).
- Wipe up any spilled brake fluid on the caliper with wet cloth.

Rear Caliper Disassembly

- Remove the rear caliper.
- Remove the pads and anti-rattle spring (see Rear Brake Pad Removal).
- Using compressed air, remove the piston.
  - ○Cover the caliper opening with a clean, heavy cloth [A].
  - ○Remove the piston by lightly applying compressed air [B] to where the brake line fits into the caliper.

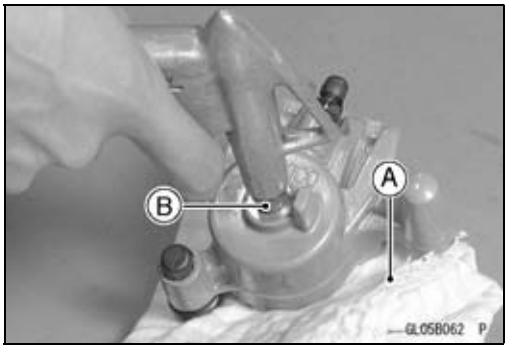

⚠ WARNING

To avoid serious injury, never place your fingers or palm inside the caliper opening. If you apply compressed air into the caliper, the piston may crush your hand or fingers.

- Remove the dust seal and fluid seal.
- Remove the bleed valve and rubber cap.

Calipers

NOTE

○*If compressed air is not available, do as follows with the brake hose connected to the caliper.*
○*Prepare a container for brake fluid, and perform the work above it.*
○*Remove the pads and spring (see Rear Brake Pad Removal).*
○*Pump the brake pedal to remove the caliper piston.*

Rear Caliper Assembly

- Clean the caliper parts except for the pads.

CAUTION
For cleaning of the parts, use only disc brake fluid, isopropyl alcohol, or ethyl alcohol.

- Install the bleed valve and rubber cap.

Torque - Bleed Valve: 7.8 N·m (0.80 kgf·m, 69 in·lb)

- Replace the fluid seal [A] with a new one.
○Apply brake fluid to the fluid seal, and install it into the cylinder by hand.
- Replace the dust seal [B] with a new one if it is damaged.
○Apply brake fluid to the dust seal, and install it into the cylinder by hand.

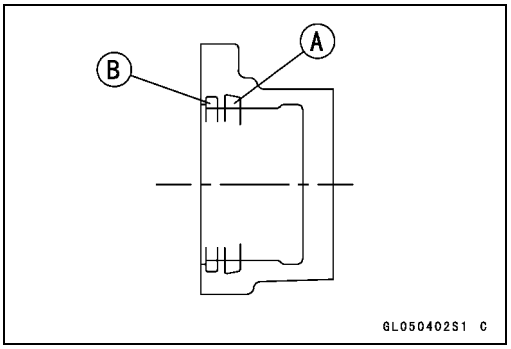

- Apply brake fluid to the outside of the piston, and push it into the cylinder by hand.
- Replace the shaft rubber friction boot [A] and dust boot [B] if they are damaged.
- Apply a thin coat of PBC (Poly Butyl Cuprysil) grease to the caliper holder shafts [C] and holder holes [D] (PBC is a special high temperature, water-resistance grease).

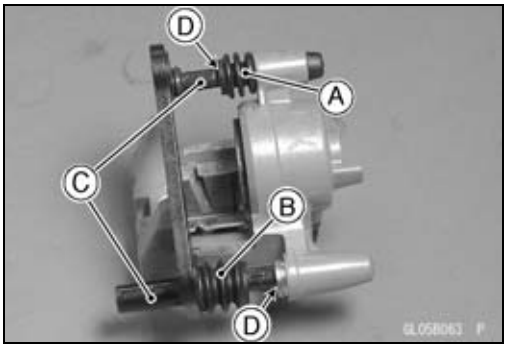

- Install the anti-rattle spring [A] in the caliper as shown.
- Install the pads (see Rear Brake Pad Installation).
- Wipe up any spilled brake fluid on the caliper with wet cloth.

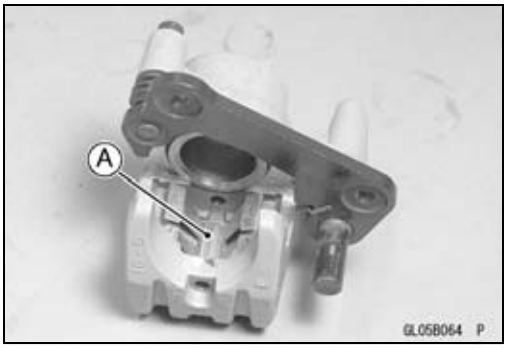

Calipers

Caliper Fluid Seal Damage

The fluid seals [A] around the piston maintain the proper pad/disc clearance. If the seals are not satisfactory, pad wear will increase, and constant pad drag on the disc will raise brake and brake fluid temperature.

- Remove the calipers (see Brakes chapter)
- Replace the fluid seals under any of the following conditions: (a) fluid leakage around the pad; (b) brakes overheat (c) there is a large difference in inner and outer pad wear; (d) the seal is stuck to the piston.

★If the fluid seal is replace, replace the dust seal as well. Also, replace all seals every other time the pads are changed.

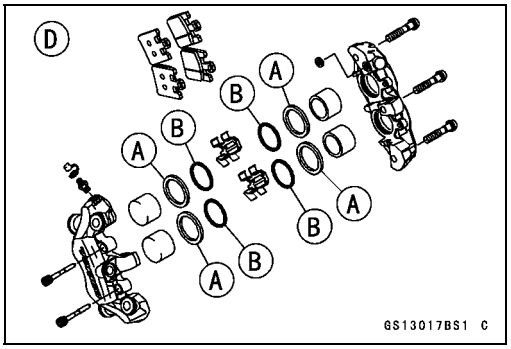

Caliper Dust Seal/Friction Boot Damage

- Remove the calipers (see Brakes chapter).
- Check that the dust seals [B] and friction boot [C] are not cracked, worn, swollen, or otherwise damaged.

★If they show any damage, remove the caliper bracket and replace them.

Front Caliper [D]
Rear Caliper [E]
Dust Boot [F]

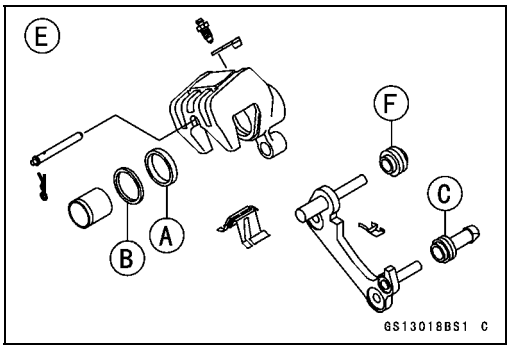

Caliper Piston and Cylinder Damage

- Visually inspect the piston [A] and cylinder surfaces.

★Replace the caliper if the cylinder and piston are badly scores or rusty.

Front Caliper [B]
Rear Caliper [C]
Dust Boot [D]

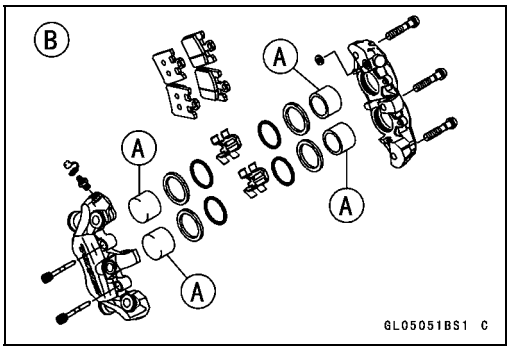

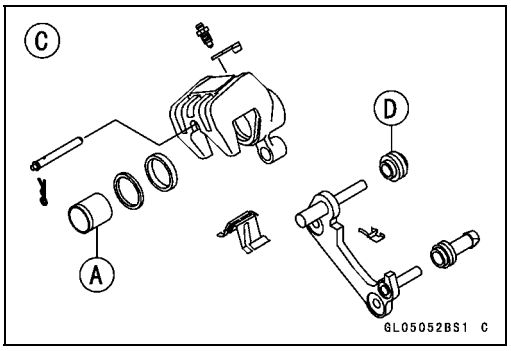

Calipers

Caliper Holder Shaft Wear

The caliper body must slide smoothly on the caliper holder shafts [A]. If the body does not slide smoothly, one pad will wear more than the other, pad wear will increase, and constant drag on the disc will raise brake and brake fluid temperature.

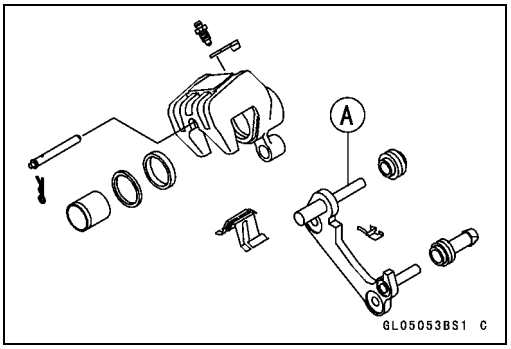

- Check to see that the caliper holder shafts are not badly worn or stepped, and that the rubber friction boots are not damaged.

★If the rubber friction boot is damaged, replace the rubber friction boot. To replace the friction boot, remove the pads and the caliper bracket.

★If the caliper holder shaft is damage, replace the caliper bracket.

Brake Pads

Front Brake Pad Removal

- Remove:
  Pad Spring Bolts [A]
  Pad Spring [B]

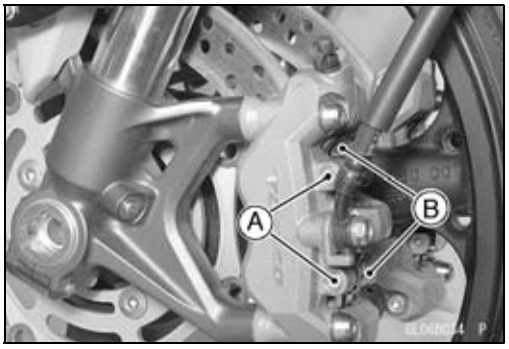

- Remove:
  Brake Pads [A]

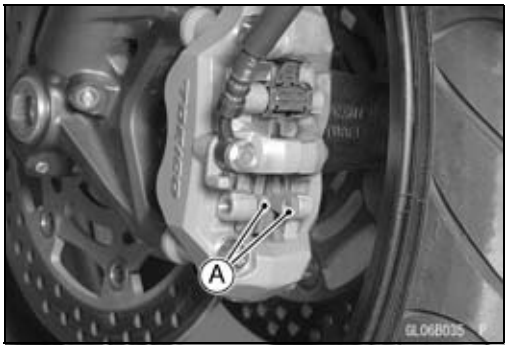

Front Brake Pad Installation

- Push the caliper pistons in by hand as far as they will go.
- Install the brake pads.
- Install the pad pin and clip. The clip must be "outside" of the pads.
- Install the pad spring and tighten the pad spring bolts.

Torque - Front Brake Pad Spring Bolts: 2.9 N·m (0.30 kgf·m, 26 in·lb)

⚠ WARNING

Do not attempt to drive the motorcycle until a full brake lever is obtained by pumping the brake lever and the pads are against the disc. The brake will not function on the first application of the lever if this is not done.

Rear Brake Pad Removal

- Remove the caliper with the hose installed.
- Remove:
  Clip [A]
  Pad Pin [B]
  Brake Pads [C]

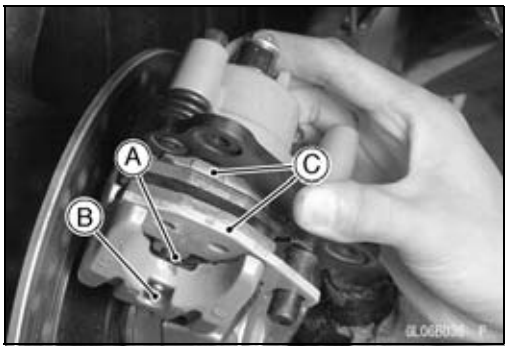

Brake Pads

Rear Brake Pad Installation

- Push the caliper piston in by hand as far as it will go.
- Install the anti-rattle spring in place.
- Install the brake pads.
- Install the pad pin and clip. The clip must be "outside" of the pads.
- Install the caliper (see Caliper Installation).

⚠ WARNING

Do not attempt to drive the motorcycle until a full brake pedal is obtained by pumping the brake pedal until the pads are against the disc. The brake will not function on the first application of the pedal if this is not done.

Brake Pad Wear Inspection

○Refer to the Brakes in the Periodic Maintenance chapter.

Master Cylinder

Front Master Cylinder Removal

- Loosen the reservoir bracket bolts [A].

- Disconnect the front brake light switch connectors.
- Remove the banjo bolt [A] to disconnect the brake hose from the master cylinder (see Brake Hose Removal/Installation).
- Unscrew the clamp bolts [B], and take off the master cylinder [C] as an assembly with the reservoir, brake lever, and brake switch installed.

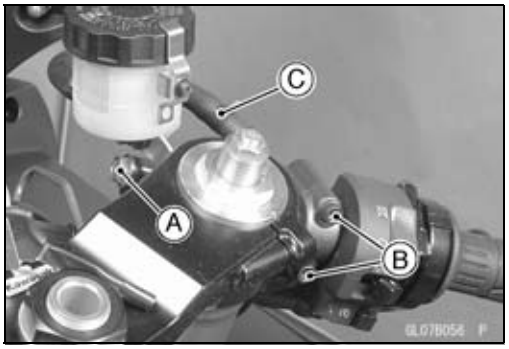

CAUTION
Immediately wash away any brake fluid that spills.

Front Master Cylinder Installation

- Set the front master cylinder to match its mating surface [A] to the punch mark [B] of the handlebar.
- The master cylinder clamp must be installed with the arrow mark [C] upward.
- Tighten the upper clamp bolt first, and then the lower clamp bolt. There will be a gap at the lower part of the clamp after tightening.

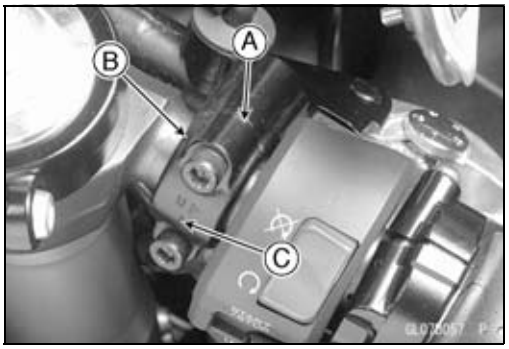

Torque - Front Master Cylinder Clamp Bolts: 8.8 N·m (0.90 kgf·m, 78 in·lb)

- Replace the washers that are on each side of the hose fitting with new ones.
- Tighten:

Torque - Brake Hose Banjo Bolt: 25 N·m (2.5 kgf·m, 18 ft·lb)

- Bleed the brake line (see Brakes in the Periodic Maintenance chapter).
- Check the brake for good braking power, no brake drag, and no fluid leakage.

Rear Master Cylinder Removal

- Unscrew the brake hose banjo bolt [A] on the master cylinder (see Brake Hose Removal/Installation).
- Pull off the reservoir hose lower end [B], and drain the brake fluid into a container.
- Remove the cotter pin [C] and join pin [D].

NOTE

○*Pull off the joint pin while pressing down the brake pedal.*

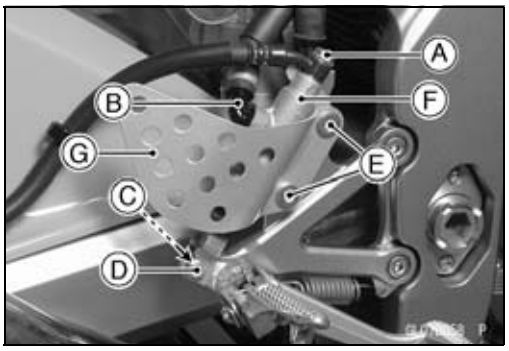

- Unscrew the master cylinder mounting bolts [E], and take off the master cylinder [F] and master cylinder cover [G].

Master Cylinder

Rear Master Cylinder Installation

- Replace the cotter pin with a new one.
- Replace the washers that are on each side of hose fitting with new ones.
- Tighten:

Torque - Rear Master Cylinder Mounting Bolts: 25 N·m (2.5 kgf·m, 18 ft·lb)
Brake Hose Banjo Bolt: 25 N·m (2.5 kgf·m, 18 ft·lb)

- Bleed the brake line (see Brakes in the Periodic Maintenance chapter).
- Check the brake for good braking power, no brake drag, and no fluid leakage.

Front Master Cylinder Disassembly

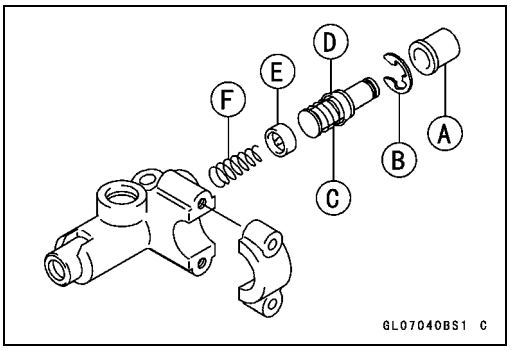

- Remove the front master cylinder (see Front Master Cylinder Removal).
- Remove the reservoir cap and diaphragm, and pour the brake fluid into a container.
- Unscrew the locknut and pivot bolt, and remove the brake lever.
- Pull the dust cover [A] out of place, and remove the circlip [B].

Special Tool - Inside Circlip Pliers: 57001–143

- Take out the piston [C], secondary cup [D], primary cup [E], and return spring [F].

CAUTION
Do not remove the secondary cup from the piston since removal will damage it.

Rear Master Cylinder Disassembly

NOTE

○*Do not remove the push rod clevis for master cylinder disassembly since removal requires brake pedal position adjustment.*

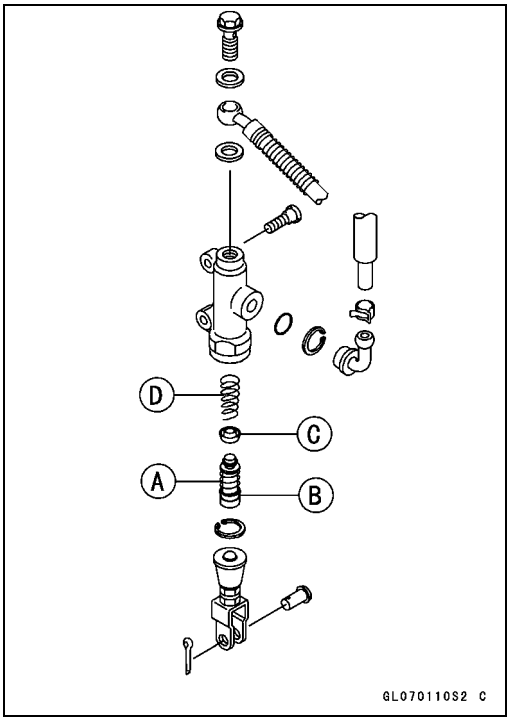

- Remove the rear master cylinder (see Rear Master Cylinder Removal).
- Slide the dust cover on the push rod out of place, and remove the circlip.

Special Tool - Inside Circlip Pliers: 57001–143

- Pull out the push rod with the piston stop.
- Take off the piston [A], secondary cup [B], primary cup [C], and return spring [D].

CAUTION
Do not remove the secondary cup from the piston since removal will damage it.

Master Cylinder

Master Cylinder Assembly

- Before assembly, clean all parts including the master cylinder with brake fluid or alcohol.

CAUTION

Except for the disc pads and disc, use only disc brake fluid, isopropyl alcohol, or ethyl alcohol for cleaning of the brake parts. Do not use any other fluid for cleaning of these parts, Gasoline, engine oil, or any other petroleum distillate will cause deterioration of the rubber parts. Oil spilled on any part will be difficult to wash off completely, and will eventually deteriorate the rubber used in the disc brake.

- Apply brake fluid to the removed parts and to the inner wall of the cylinder.
- Take care not to scratch the piston or the inner wall of the cylinder.
- Apply silicone grease (ex. PBC grease)
  Brake Lever Pivot Bolt
  Brake Lever Pivot Contact
  Push Rod Contact (Rear)
  Dust Covers
- Tighten:

Torque - Brake Lever Pivot Bolt: 1.0 N·m (0.10 kgf·m, 9 in·lb)
Brake Lever Pivot Bolt Locknut: 5.9 N·m (0.60 kgf·m, 52 in·lb)

Master Cylinder Inspection

- Remove the master cylinders (see Brakes chapter).
- Disassemble the front and rear master cylinders.
- Check that there are no scratches, rust or pitting on the inner wall [A] of each master cylinder and on the outside of each piston [B].

★If a master cylinder or piston shows any damage, replace them.

- Inspect the primary cup [C] and secondary cup [D].

★If a cup is worn, damaged softened (rotted), or swollen, the piston assembly should be replaced to renew the cups.

★If fluid leakage is noted at the brake lever, the piston assembly should be replaced to renew the cups.

Front Master Cylinder [J]

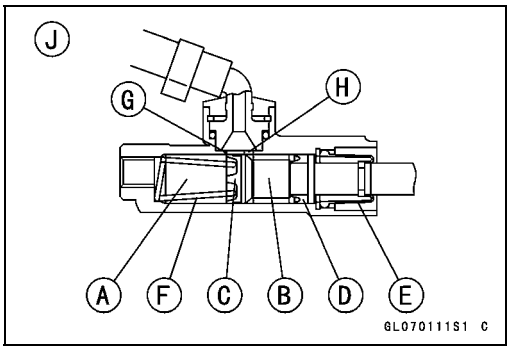

Master Cylinder

- Check the dust covers [E] for damage.

★If they are damaged, replace them.

- Check the piston return spring [F] for any damage.

★If the springs are damaged, replace them.

- Check that relief port [G] and supply port [H] are not plugged.

★If the relief port becomes plugged, the brake pads will drag on the disc. Blow the ports clean with compressed air.

Rear Maser Cylinder [K]

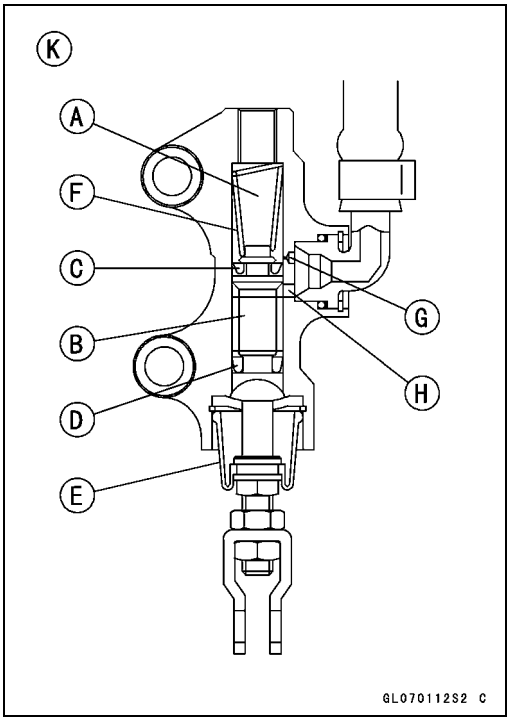

Brake Disc

Brake Disc Removal

- Remove the wheel (see Wheels/Tires chapter).
- Unscrew the mounting bolts, and take off the disc.
- Remove the gasket (Front Brake Disc only).

Brake Disc Installation

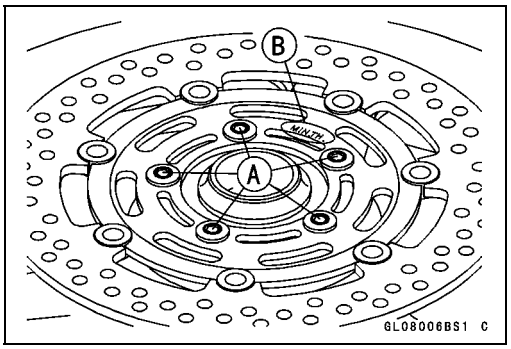

- Replace the gasket with a new one (Front Brake Disc only).
- Install the brake disc on the wheel so that the marked side [B] faces out.
- Apply a non-permanent locking agent to the threads of the rear brake disc mounting bolts [A].
- Tighten:

Torque - Brake Disc Mounting Bolts: 27 N·m (2.8 kgf·m, 20 ft·lb)

Brake Disc Wear

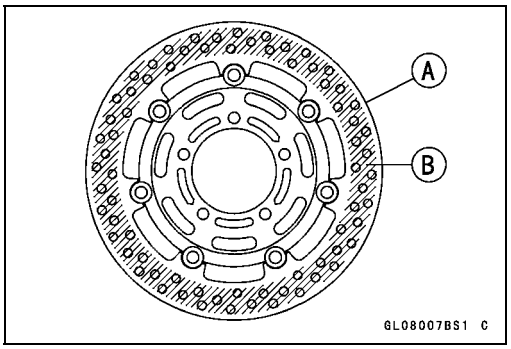

- Measure the thickness of each disc [A] at the point where it has worn the most.

★If the disc has worn past the service limit, replace it.

[B] Measuring Area

Front Brake Discs Thickness

Standard:	**5.8 ~ 6.2 mm (0.23 ~ 0.24 in.)**
Service Limit:	**5.5 mm (0.22 in.)**

Rear Brake Discs Thickness

Standard:	**4.8 ~ 5.1 mm (0.19 ~ 0.20 in.)**
Service Limit:	**4.5 mm (0.18 in.)**

Brake Disc Warp

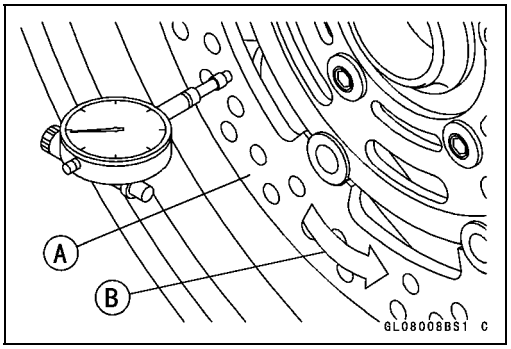

- Jack up the motorcycle so that the wheel is off the ground (see Wheels/Tires chapter).

Special Tool - Jack: 57001–1238

○For front disc inspection, turn the handlebar fully to one side.

- Set up a dial gauge against the disc [A] as shown and measure disc runout, while turning [B] the wheel by hand.

★If runout exceeds the service limit, replace the disc.

Disc Runout

Standard:	**0.15 mm (0.006 in.) or less**
Service Limit:	**0.3 mm (0.01 in.)**

Brake Fluid

Level Inspection

○Refer to the Brakes in the Periodic Maintenance chapter.

Brake Fluid Change

○Refer to the Brakes in the Periodic Maintenance chapter.

Bleeding the Brake Line

○Refer to the Brakes in the Periodic Maintenance chapter.

Brake Hose

Brake Hose Removal/Installation

CAUTION
Brake fluid quickly ruins painted or plastic surfaces; any spilled fluid should be completely wiped up immediately with wet cloth.

- When removing the brake hose, take care not to spill the brake fluid on the painted or plastic parts.
- When removing the brake hose, temporarily secure the end of the brake hose to some high place to keep fluid loss to a minimum.
- There are washers on each side of the brake hose fitting. Replace them with new ones when installing.
- When installing the hoses, avoid sharp bending, kinking, flattening or twisting, and route the hoses according to Cable, Wire, and Hose Routing section in Appendix chapter.
- Tighten:

  Torque - Brake Hose Banjo Bolts: 25 N·m (2.5 kgf·m, 18 ft·lb)
- Bleed the brake line after installing the brake hose (see Brakes in the Periodic Maintenance chapter).

Brake Hose Inspection

○Refer to the Brakes in the Periodic Maintenance chapter.

Suspension

Table of Contents

Exploded View 13-2
Specifications 13-6
Special Tools 13-7
Front Fork 13-9
- Rebound Damping Force Adjustment 13-9
- Compression Damping Force Adjustment 13-9
- Spring Preload Adjustment 13-10
- Front Fork Removal (each fork leg) 13-10
- Front Fork Installation 13-11
- Front Fork Oil Change 13-11
- Front Fork Disassembly 13-15
- Front Fork Assembly 13-15
- Inner Tube Inspection 13-16
- Dust Seal Inspection 13-17
- Spring Tension 13-17

Rear Shock Absorber 13-18
- Rebound Damping Force Adjustment 13-18
- Compression Damping Force Adjustment 13-18
- Spring Preload Adjustment 13-18
- Rear Shock Absorber Removal 13-19
- Rear Shock Absorber Installation 13-20
- Rear Shock Absorber Inspection 13-20
- Rear Shock Absorber Scrapping 13-20

Swingarm 13-21
- Swingarm Removal 13-21
- Swingarm Installation 13-21
- Swingarm Bearing Removal 13-22
- Swingarm Bearing Installation 13-23
- Swingarm Bearing, Sleeve Inspection 13-23
- Swingarm Pivot Lubrication 13-23
- Chain Guide Inspection 13-23

Tie-Rod, Rocker Arm 13-24
- Tie-Rod Removal 13-24
- Tie-Rod Installation 13-24
- Rocker Arm Removal 13-24
- Rocker Arm Installation 13-24
- Rocker Arm/Tie-Rod Bearing, Sleeve Inspection 13-25
- Rocker Arm/Tie-Rod Lubrication 13-25

Exploded View

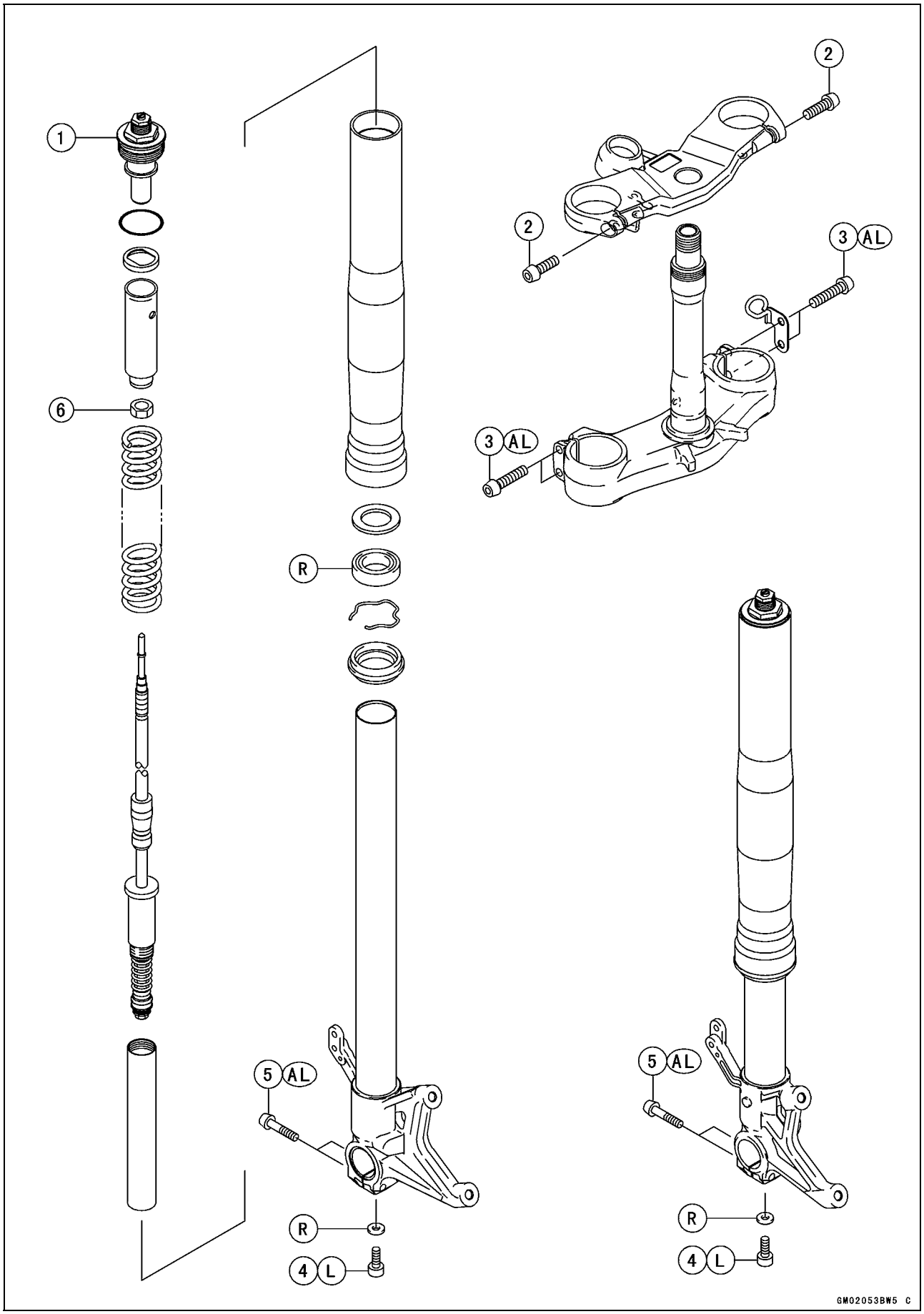

Exploded View

No.	Fastener	Torque			Remarks
		N·m	kgf·m	ft·lb	
1	Front fork top plug	23	2.3	17	
2	Front fork clamp bolts (upper)	20	2.0	14.5	
3	Front fork clamp bolts (lower)	20	2.0	14.5	AL
4	Front fork bottom allen bolts	40	4.0	30	L
5	Front axle clamp bolts	20	2.0	14.5	AL
6	Piston rod nut	15	1.5	11	

AL: Tighten the two clamp bolts alternately two times to ensure even tightening torque.
L: Apply a non-permanent locking agent.
R: Replacement Parts

Exploded View

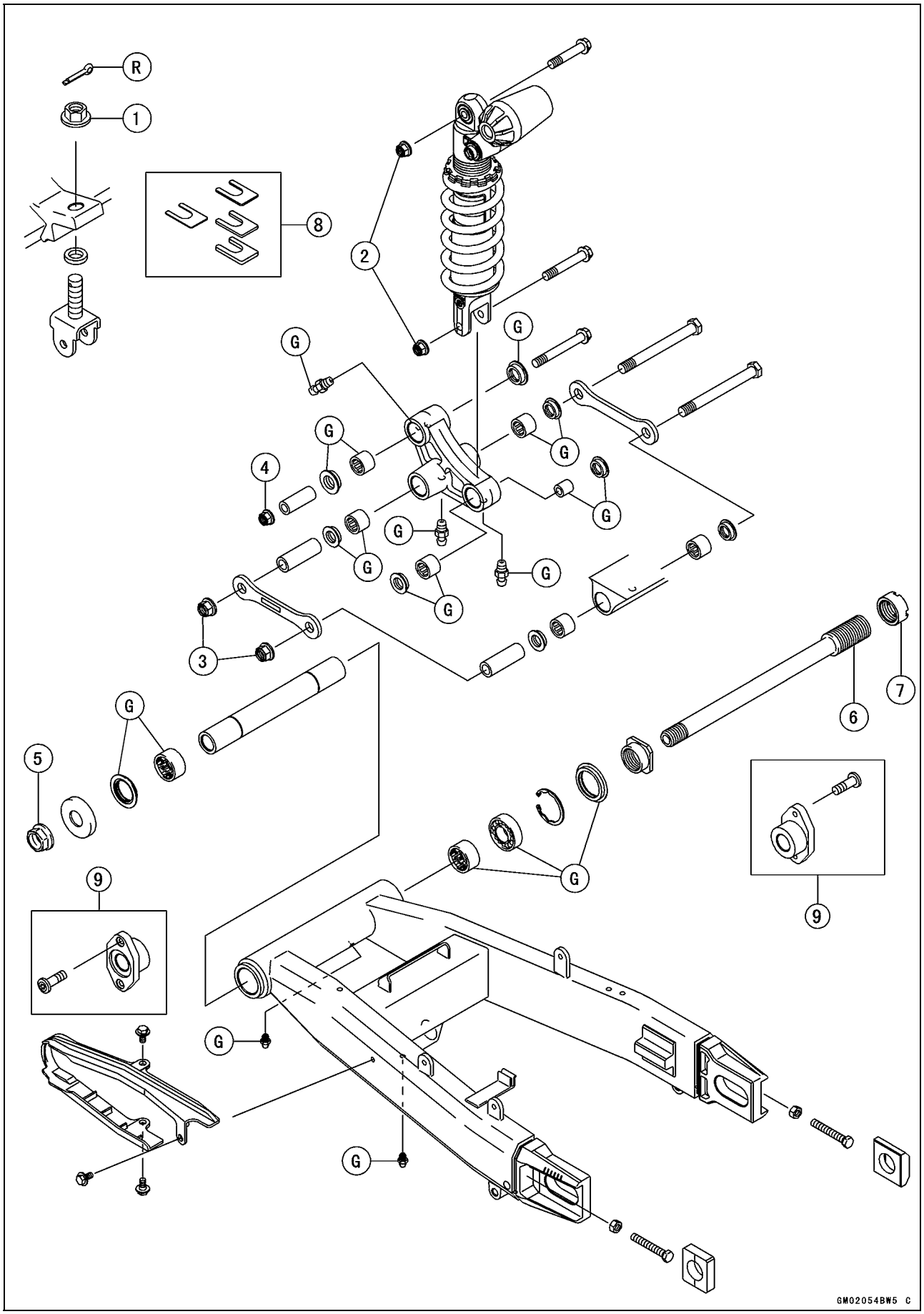

Exploded View

No.	Fastener		Torque N·m	Torque kgf·m	Torque ft·lb	Remarks
1	Rear shock absorber bracket nut		59	6.0	43	
2	Rear shock absorber Nuts (upper and lower)		34	3.5	25	
3	Tie-Rod Nuts		59	6.0	43	
4	Uni-Trak rocker arm nut		34	3.5	25	
5	Swingarm pivot shaft nut		108	11	81	
6	Swingarm pivot shaft	ZX636	20	2.0	14	
		ZX600	25	2.5	18	
7	Swingarm pivot shaft locknut		98	10	72	

No.	Parts			Parts No.	Remarks
8	Spacer set (Option)			92026–1586	T1.0/T2.0/T3.2/T4.5
9	Swingarm bracket (ZX600 Only)				
		STD	(LH)	92152–1482	Swingarm pivot height no changes.
			(RH)	92152–1483	
		OPTION	(LH)	92152–0042	Swingarm pivot height changes plus or minus 1 mm (0.039 in.).
			(RH)	92152–0043	
			(LH)	92152–0044	Swingarm pivot height changes plus or minus 2 mm (0.079 in.).
			(RH)	92152–0045	

G: Apply or add grease.
R: Replacement Parts

Specifications

Item	Standard
Front Fork (per one unit):	
Fork inner tube diameter	ϕ41 mm (1.6 in.)
Air Pressure	Atmospheric pressure (Non-adjustable)
Rebound damper setting	8th click from the first click of the fully clockwise position (Usable Range: 0 ←→ 11 clicks)
Compression damper setting	8th click from the first click of the fully clockwise position (Usable Range: 0 ←→ 13 clicks)
Fork spring preload setting	Adjuster protrusion is 14 mm (0.55 in.) (Usable Range: 4 ~ 19 mm) (0.16 ~ 0.75 in.)
Fork Oil:	
Viscosity	KAYABA 01 or SAE 5W
Amount:	
When changing oil	Aprox. 410 mL (13.9 US oz.)
After disassembly and completely dry	482 ± 4 mL (16.3 ± 0.14 US oz.)
Fork oil level: (fully compressed, without spring, below from the top of the inner tube)	101 ± 2 mm (3.98 ± 0.08 in.)
Fork spring free length	248 mm (9.76 in.) (Service limit: 243 mm (9.57 in.))
Rear Shock Absorber:	
Rebound damper set	4 1/4 turns out from the fully clockwise position
ZX636–B2 ~ :	2 turns out from the fully clockwise position (Usable Range: 0 ←→ 4 1/2 turns out)
Compression damper set	3 1/2 turns out from the fully clockwise position
ZX636–B2 ~ :	2 1/2 turns out from the fully clockwise position (Usable Range: 0 ←→ 4 turns out)
Spring preload setting position	
Standard	Spring length: 180 mm (7.1 in.)
Usable range	Spring length: 171.5 ~ 191.5 mm (6.8 ~ 7.5 in.) (weaker to stronger)
Gas pressure	980 kPa (10 kgf/cm², 142 psi, Non-adjustable)

Special Tools

Inside Circlip Pliers:
57001–143

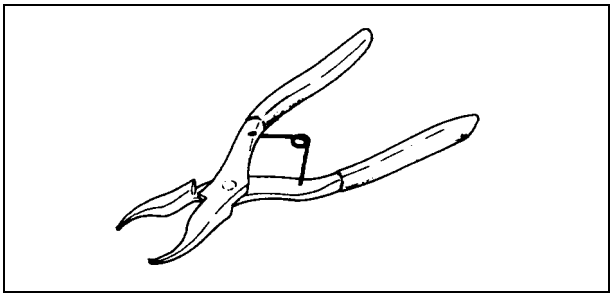

Oil Seal & Bearing Remover:
57001–1058

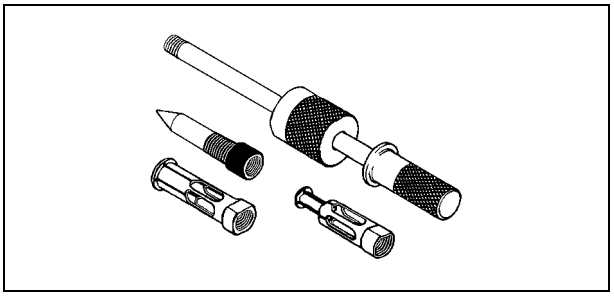

Bearing Driver Set:
57001–1129

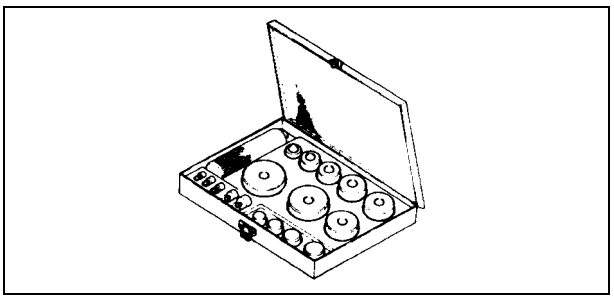

Jack:
57001–1238

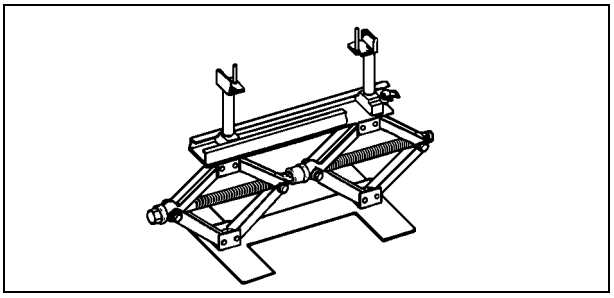

Front Fork Oil Seal Driver:
57001–1288

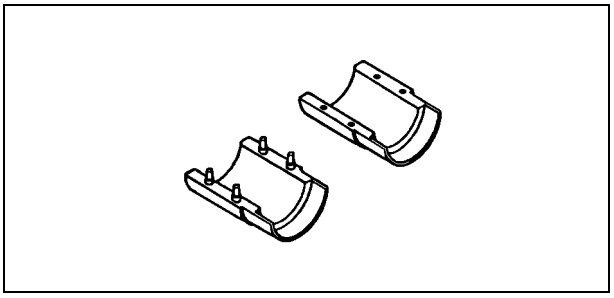

Fork Piston Rod Puller, M10 × 1.0:
57001–1298

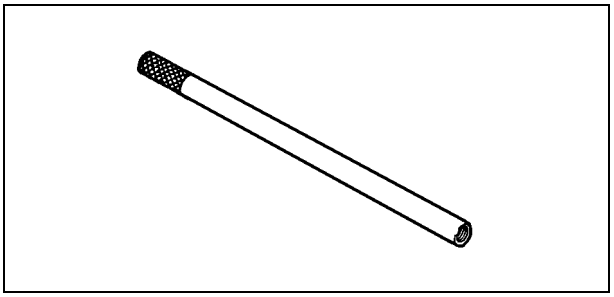

Fork Spring Stopper:
57001–1316

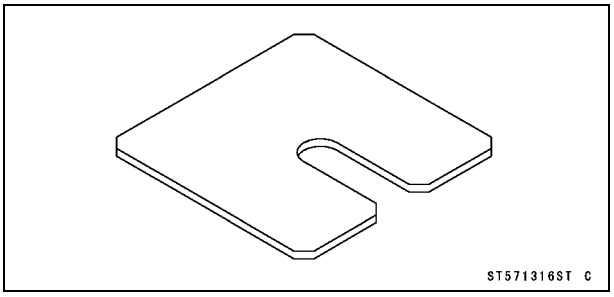

Hook Wrench:
57001–1522

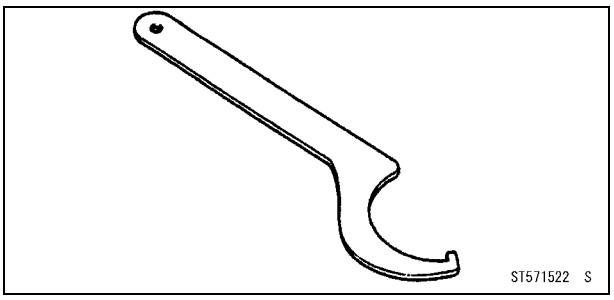

Hook Wrench:
57001–1533

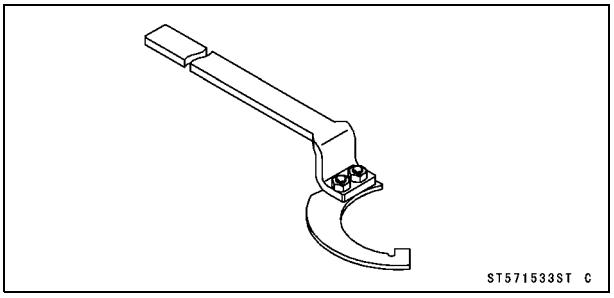

Fork Cylinder Holder:
57001–1537

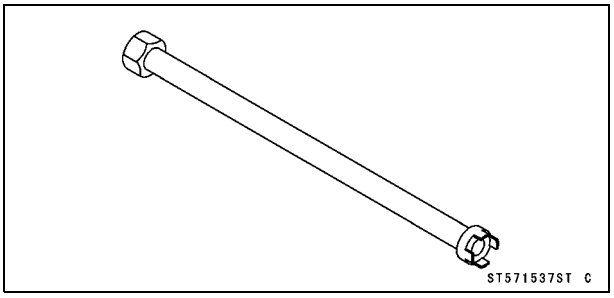

Special Tools

Fork Spring Compressor:
57001–1540

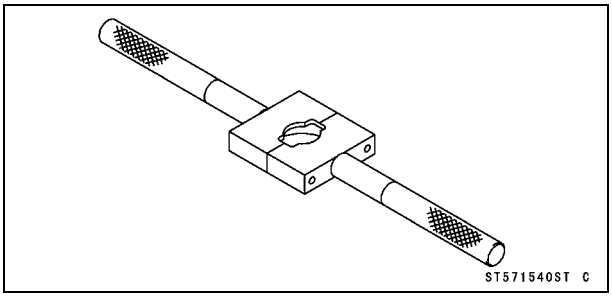

Swingarm Pivot Nut Wrench:
57001–1541

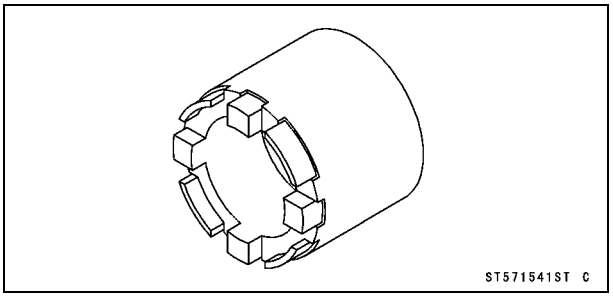

Front Fork

Rebound Damping Force Adjustment

- To adjust the rebound damping force, turn the rebound damping adjuster [A] until you feel a click.

○The standard adjuster setting for the average-build rider of 68 kg (150 lb) with no passenger and no accessories is the **8th click** from the 1st click of the fully clockwise position.

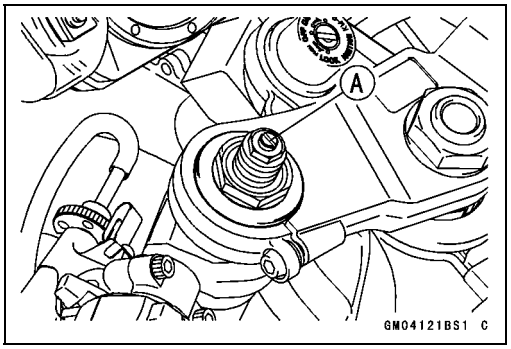

⚠ WARNING

If both adjusters are not adjusted equally, handling may be impaired and a hazardous condition may result.

○The damping force can be left soft for average riding. But it should be adjusted harder for high speed riding or riding with a passenger. If the damping feels too soft or too stiff, adjust it in accordance with the following table.

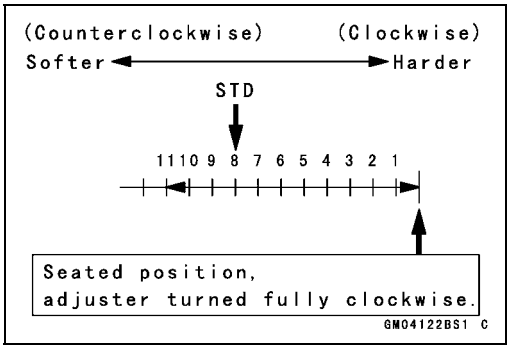

Rebound Damping Force Adjustment

Adjuster Position	Damping Force	Setting	Load	Road	Speed
11	Weak	Soft	Light	Good	Low
↑	↑	↑	↑	↑	↑
↓	↓	↓	↓	↓	↓
0	Strong	Hard	Heavy	Bad	High

Compression Damping Force Adjustment

- To adjust the compression damping force, turn the compression damping adjuster [A] until you feel a click.

○The standard adjuster setting for the average-build rider of 68 kg (150 lb) with no passenger and no accessories is the **8th click** from the 1st click of the fully clockwise position.

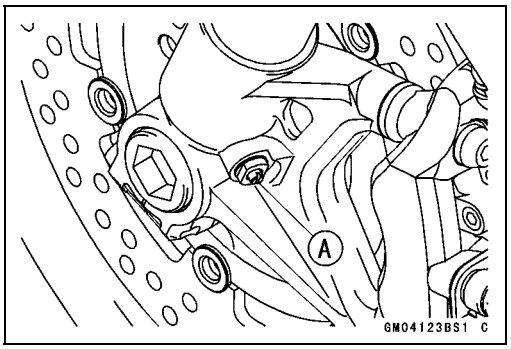

⚠ WARNING

If both adjusters are not adjusted equally, handling may be impaired and a hazardous condition may result.

○The damping force can be left soft for average riding. But it should be adjusted harder for high speed riding or riding with a passenger. If the damping feels too soft or too stiff, adjust it in accordance with the following table.

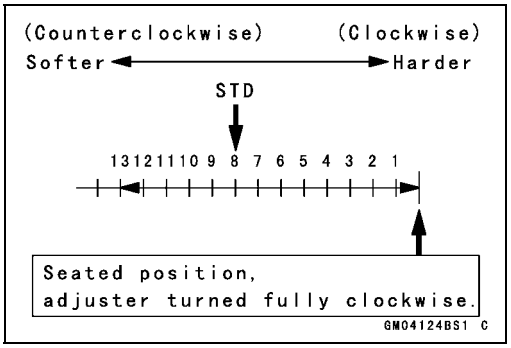

Compression Damping Force Adjustment

Adjuster Position	Damping Force	Setting	Load	Road	Speed
13	Weak	Soft	Light	Good	Low
↑	↑	↑	↑	↑	↑
↓	↓	↓	↓	↓	↓
0	Strong	Hard	Heavy	Bad	High

Front Fork

Spring Preload Adjustment

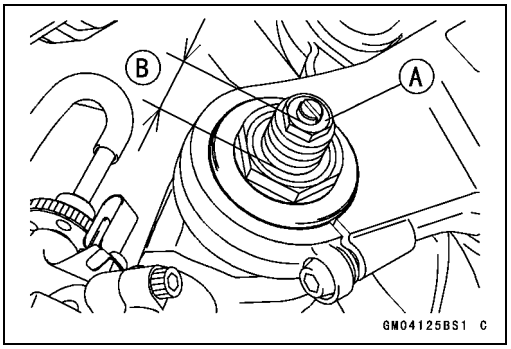

- Turn the spring preload adjuster [A] to change spring preload setting.

○The standard adjuster setting for the average-build rider of 68 kg (150 lb) with no passenger and no accessories is the 14 mm (0.55 in.) [B] from top as shown.

Adjuster Protrusion (from top)
Standard: 14 mm (0.55 in.)
Usable Range: 4 ~ 19 mm (0.16 ~ 0.75 in.)

⚠ WARNING

If both adjusters are not adjusted equally, handling may be impaired and a hazardous condition may result.

○The spring preload can be left soft for average riding. But it should be adjusted harder for high speed riding or riding with a passenger. If the spring action feels too soft or too stiff, adjust it in accordance with the following table.

Spring Action

Adjuster Position	Damping Force	Setting	Load	Road	Speed
19 mm	Weak	Soft	Light	Good	Low
↑	↑	↑	↑	↑	↑
↓	↓	↓	↓	↓	↓
4 mm	Strong	Hard	Heavy	Bad	High

Front Fork Removal (each fork leg)

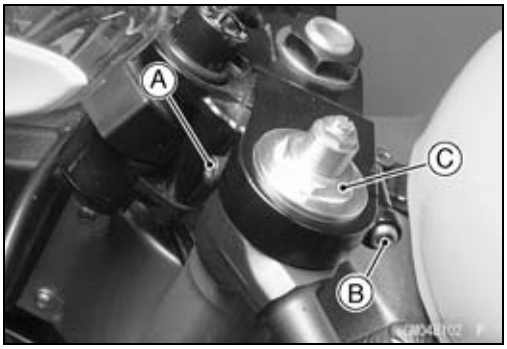

- Remove:
  Lower and Upper Fairings (see Frame chapter)
  Front Wheel (see Wheels/Tires chapter)
  Front Fender (see Frame chapter)

★Loosen the handlebar bolt [A], upper fork clamp bolt [B] and fork top plug [C] beforehand if the fork leg is to be disassembled.

NOTE

○*Loosen the top plug after loosening the handlebar holder bolt and upper fork clamp bolt.*

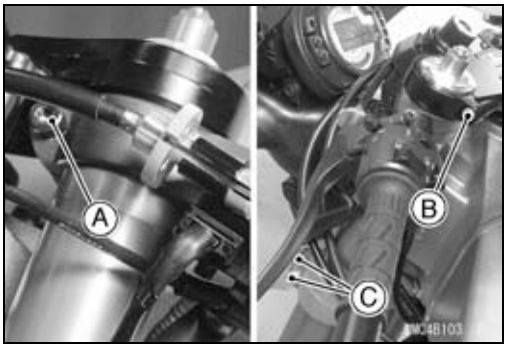

- Loosen the handlebar bolt [A], upper fork clamp bolt [B] and lower fork clamp bolts [C].
- With a twisting motion, work the fork leg down and out.

Front Fork

Front Fork Installation

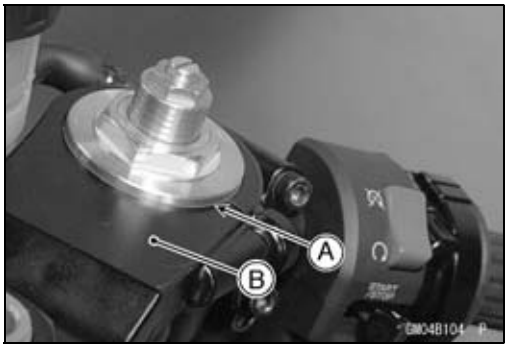

- Install the fork so that the top end [A] of the outer tube is flush with the upper surface [B] of the steering stem head bracket.
- Tighten the lower fork clamp bolts and fork top bolt.

Torque - Front Fork Clamp Bolts (Lower): 20 N·m (2.0 kgf·m, 14.5 ft·lb)
Front Fork Top Plug: 23 N·m (2.3 kgf·m, 17 ft·lb)

- Tighten the handlebar holder bolt upper fork clamp bolt.

Torque - Handlebar Holder Bolt: 25 N·m (2.5 kgf·m, 18 ft·lb)
Front Fork Clamp Bolt (Upper): 20 N·m (2.0 kgf·m, 14.5 ft·lb)

NOTE

○*Tighten the two clamp bolts alternately two times to ensure even tightening torque.*
○*Tighten the top plug before tightening the handlebar holder bolt upper fork clamp bolt.*

- Install the removed parts (see appropriate chapters).
- Adjust the spring preload and the damping force.

Front Fork Oil Change

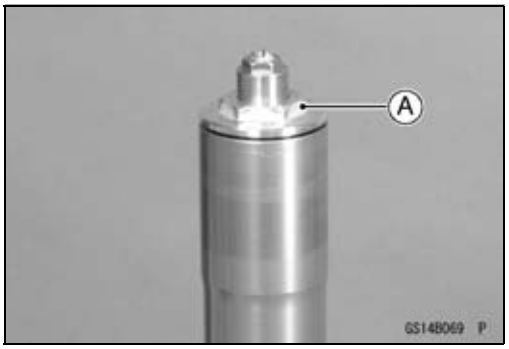

- Remove the front fork (see Front Fork Removal).
- Hold the inner tube lower end in a vise.
- Unscrew the top plug [A] out of the outer tube.

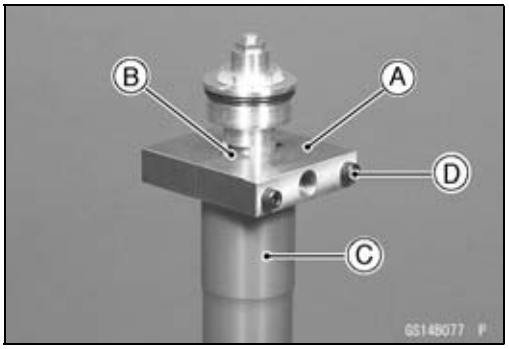

- Install the clamps [A] as shown.

NOTE

○*Set the clamps so that the cutout [B] of the upper side does not touch the tongue shape of stopper, pull up the outer tube [C] to hold it by the clamps, and then tighten the two bolts [D]. The outer tube is used as a guide.*

Special Tool - Fork Spring Compressor: 57001–1540

- Screw the handles in the clamps to the bottom.

Front Fork

- While holding up the top plug by one person, push down the fork spring compressor and insert the fork spring stopper [A] between the piston rod nut [B] and the clamps [C].

  Special Tool - Fork Spring Stopper: 57001–1316

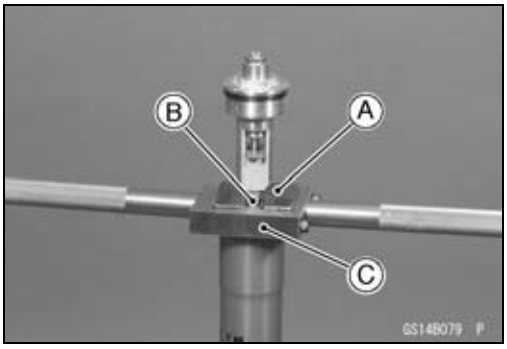

- Holding the piston rod nut with a wrench [A], remove the top plug [B] from the piston rod.

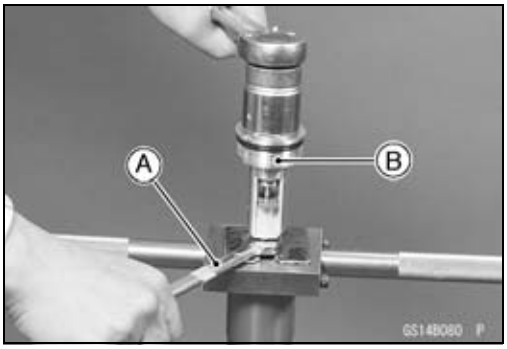

- Remove:
  Washer [A]
  Collar [B]
  Rebound Damping Adjuster Rod [C]
  Fork Spring [D]

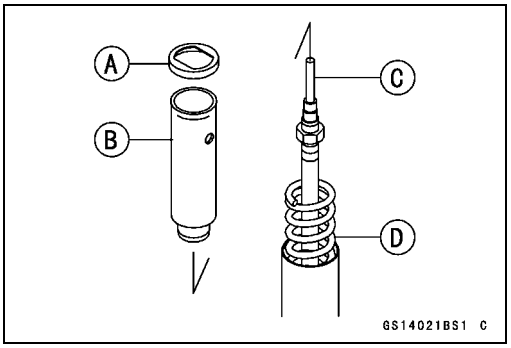

- Drain the fork oil into a suitable container.

○Pump the piston rod [B] up and down at least ten times to expel the oil from the fork.

Special Tool - Fork Piston Rod Puller, M12 × 12.5: 57001–1289 [A]

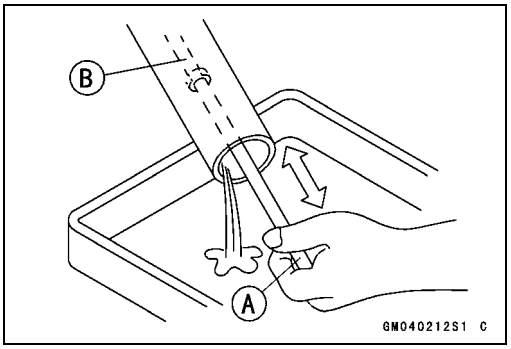

- Hold the fork tube upright, press the inner tube [A] and the piston rod all the way down.
- Pour in the type and amount of fork oil specified.

Fork Oil

Viscosity:	**KAYABA 01 or SAE 5W**
Amount (per side)	
When changing oil:	**approx. 410 mL (13.9 US oz.)**
After disassembly and completely dry:	**482 ± 4 mL (16.3 ± 0.14 US oz.)**

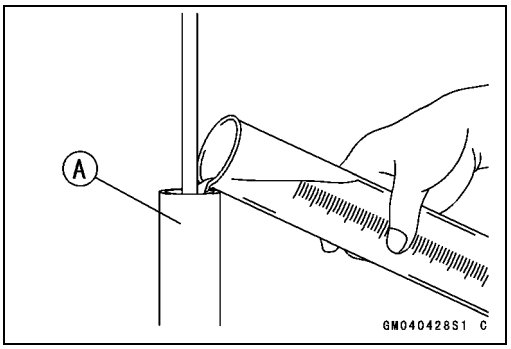

Front Fork

★If necessary, measure the oil level as follows.
○Hold the inner tube vertically in a vise.
○Pump the inner tube several times to expel air bubbles.
○Using the piston rod puller [A], move the piston rod [B] up and down more than ten times in order to expel all the air from the fork oil.

Special Tool - Fork Piston Rod Puller, M12 × 1.25: 57001 -1289

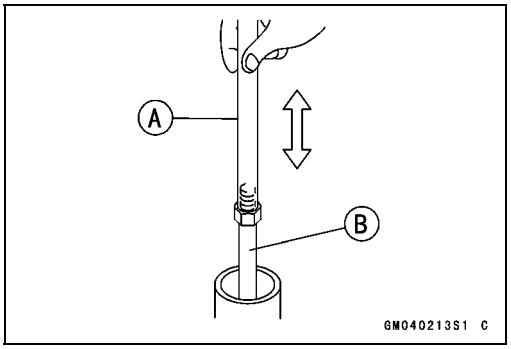

○Remove the piston rod puller.
○Wait until the oil level settles.
○With the fork fully compressed and the piston rod fully pushed in, insert a tape measure or rod into the inner tube, and measure the distance from the top of the outer tube to the oil.

Oil Level (fully compressed, without spring)
Standard: 101 ± 2 mm (3.98 ± 0.08 in)
(from the top of the outer tube)

NOTE

○*Fork oil lever may also be measured using the fork oil level gauge.*

Special Tool - Fork Oil Level Gauge: 57001-1290 [A]

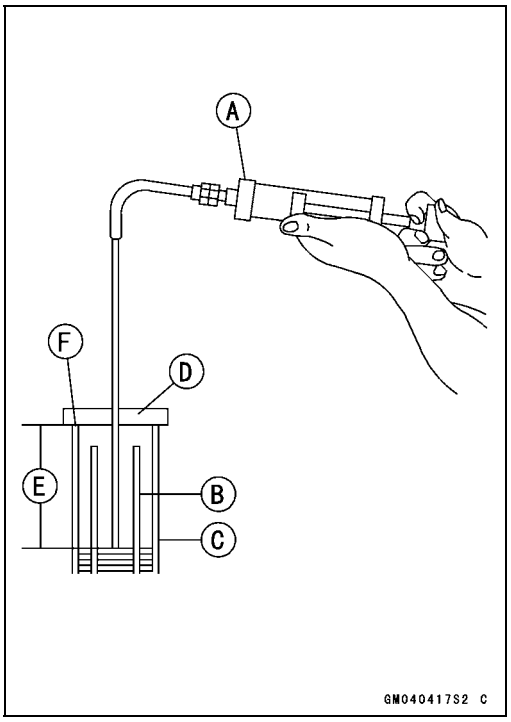

○With the fork fully compressed and without fork spring, insert the gauge tube into the inner tube [B] and position the stopper across the top end [F] of the outer tube [C].
○Set the gauge stopper [D] so that its lower side shows the oil level distance specified [E].
○Pull the handle slowly to pump out the excess oil until the oil no longer comes out.
★If no oil is pumped out, there is insufficient oil in the inner tube. Pour in enough oil, then pump out the excess oil as shown above.

- Screw the fork piston rod puller onto the end of the piston rod.

Special Tool - Fork Piston Rod Puller, M12 × 1.25: 57001–1289

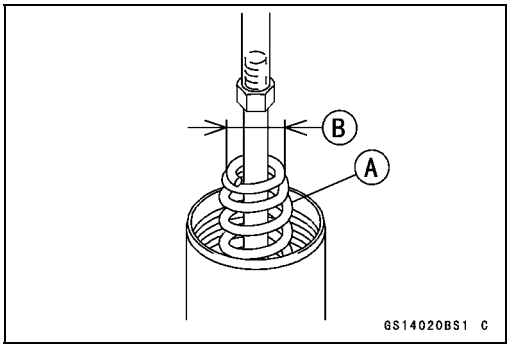

- Pull the puller up above the outer tube top.
- Install the fork spring [A] with the smaller end facing [B] upward.
- Install:
  Spring Seat
  Collar

Front Fork

- Screw the rod nut [B] onto the piston rod [A] as shown.
- Insert the rebound damping adjuster rod [C] into the piston rod.

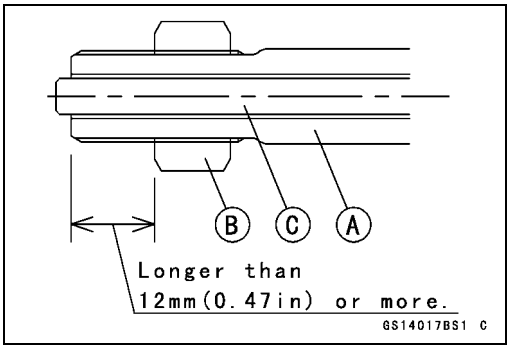

- Check the distance [C] between the bottom end [A] of the top plug and rebound damping adjuster [B] with a pair of vernier caliper.
  [C]: 13 mm (0.51 in)

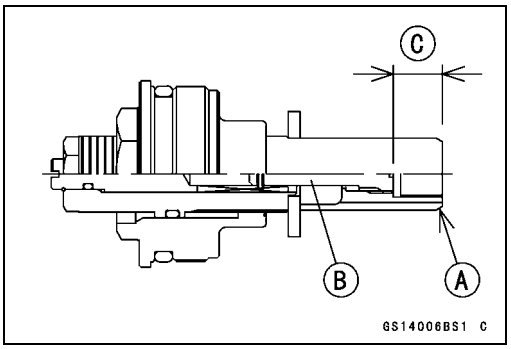

- Set the fork spring compressor [A] on the washer using the outer tube as a guide.

  Special Tool - Fork Spring Compressor: 57001-1540
- While holding up the fork piston rod puller [B] by one person, push down the fork spring compressor and insert the fork spring stopper [C] between the piston rod nut [D] and the clamps of the fork spring compressor.

  Special Tool - Fork Spring Stopper: 57001–1316

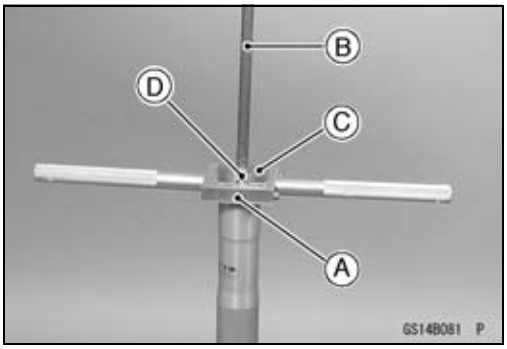

- Remove the piston rod puller.
- Screw in the top plug [A] stopped onto the piston rod.
- Check the O-ring [B] on the top plug and replace it with a new one if damaged.
- Holding the top plug with a wrench, tighten the piston rod nut [C] against the top plug.

  Torque - Piston Rod Nut: 15 N·m (1.5 kgf·m, 11 ft·lb)
- While holding up the fork spring compressor, pull out the fork spring stopper.
- Remove the fork spring compressor.

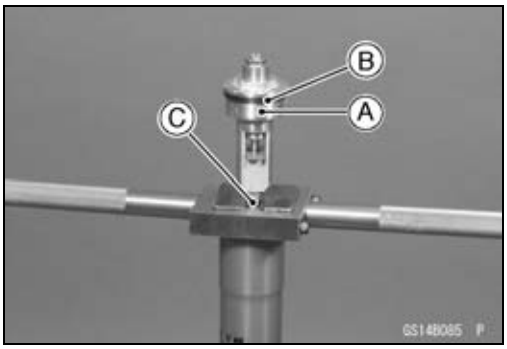

- Raise the outer tube and screw the top plug into it and install it to the steering stem.
- Screw in the spring preload adjuster [A] of the top plug so that the distance between the adjuster top and the top plug surface [B] is 14 mm (0.55 in) [C].
- Turn in the rebound damping adjuster [D] until the fully tightened position and turn backward the 8th click.
- Install the front fork (see Front Fork Installation).

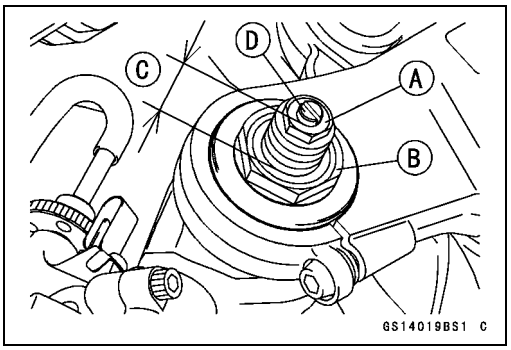

Front Fork

Front Fork Disassembly

- Remove the front fork (see Front Fork Removal).
- Drain the fork oil (see Front Fork Oil Change).
- Hold the front fork in a vise [A].
- Stop the cylinder [B] from turning by using the fork cylinder holder [C].

  Special Tool - Fork Cylinder Holder: 57001-1537

- Unscrew the allen bolt [D], then take the bolt and gasket out of the bottom of the inner tube.

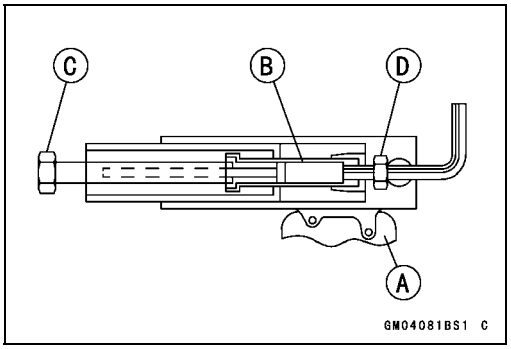

- Take the cylinder unit [A].

○Do not disassemble the cylinder unit.

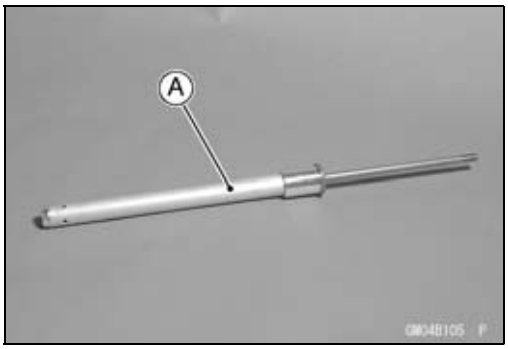

- Separate the outer tube from the inner tube.
- Pull out the dust seal.
- Remove the retaining ring [A] from the outer tube.
- Remove the oil seal [B] and washer [C].

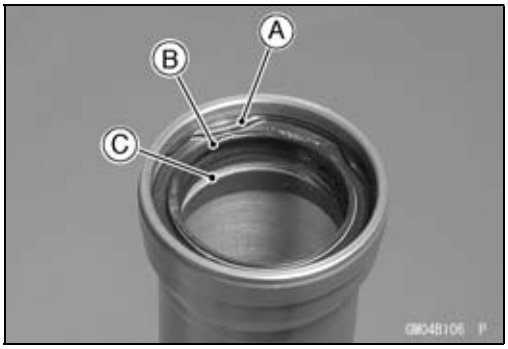

Front Fork Assembly

- Replace the following parts with a new one.
  Oil Seal
  Bottom Allen Bolt Gasket

- Insert the cylinder unit [A] into the inner tube [B].
- Stop the cylinder from turning by using the fork cylinder holder.

  Special Tool - Fork Cylinder Holder: 57001-1537

- Apply a non-permanent locking agent to the allen bolt and tighten it.

  Torque - Front Fork Bottom Allen Bolt: 40 N·m (4.0 kgf·m, 30 ft·lb)

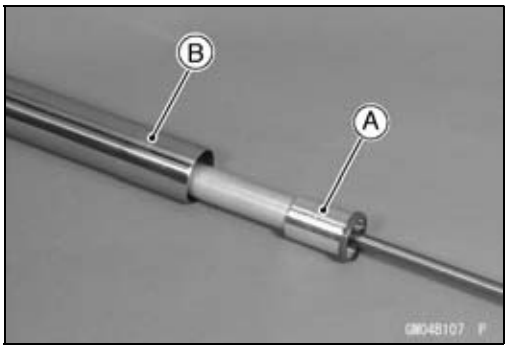

Front Fork

- Install the following parts into the inner tube [A].
  Dust Seal [B]
  Circlip [C]
  Oil Seal [D]
  Washer [E]

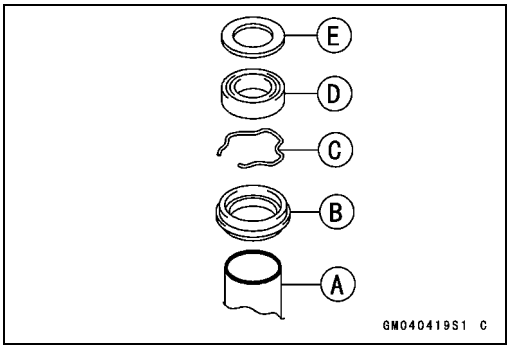

- Insert the inner tube to the outer tube.
- After installing the washer, install the oil seal [A] by using the fork oil seal driver [B].

  Special Tool - Front Fork Oil Seal Driver: 57001-1288
- Install the circlip and dust seal.
- Pour in the specified type of oil (see Front Fork Oil Change).

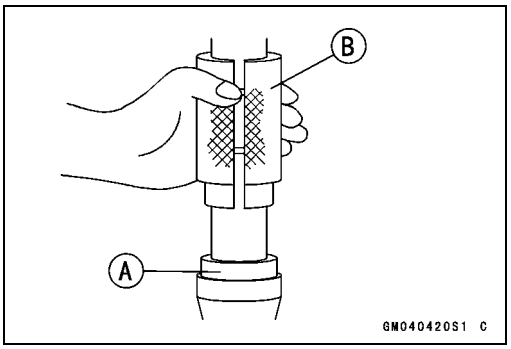

Inner Tube Inspection

- Visually inspect the inner tube [A], and repair any damage.
- Nicks or rust damage can sometimes be repaired by using a wet-stone to remove sharp edges or raised areas which cause seal damage.

★If the damage is not repairable, replace the inner tube. Since damage to the inner tube damages the oil seal, replace the oil seal whenever the inner tube is repaired or replaced.

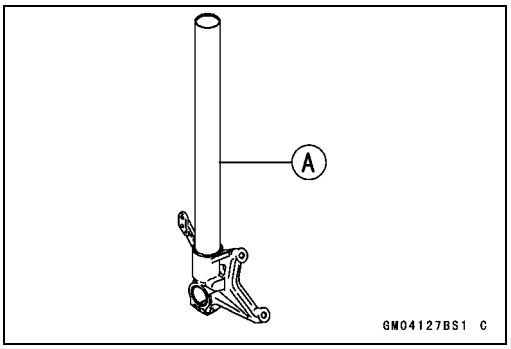

CAUTION

If the inner tube is badly bent or creased, replace it. Excessive bending, followed by subsequent straightening, can weaken the inner tube.

- Temporarily assemble the inner and outer tubes, and pump them back and forth manually to check for smooth operation.
- If you feel binding or catching, the inner and outer tubes must be replaced.

⚠ WARNING

A straightened inner or outer fork tube may fall in use, possibly causing an accident. Replace a badly bent or damaged inner or outer tube and inspect the other tube carefully before reusing it.

Front Fork

Dust Seal Inspection

- Inspect the dust seals [A] for any signs of deterioration or damage.

★Replace it if necessary.

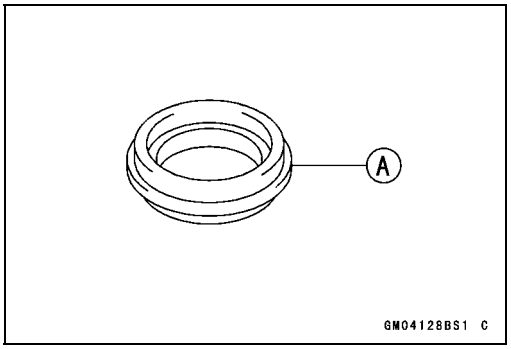

Spring Tension

- Since a spring becomes shorter as it weakens, check its free length [A] to determine its condition.

★If the spring of either fork leg is shorter than the service limit, it must be replaced. If the length of a replacement spring and that of the remaining spring vary greatly, the remaining spring should also be replaced in order to keep the fork legs balanced for motorcycle stability.

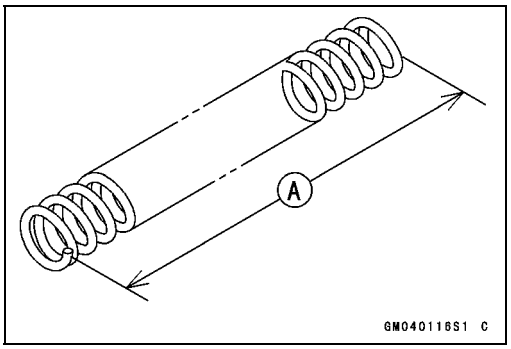

Spring Free Length

Standard:	**248 mm (9.76 in.)**
Service Limit:	**243 mm (9.57 in.)**

Rear Shock Absorber

Rebound Damping Force Adjustment

- To adjust the rebound damping force, turn the lower damping adjuster [A] to the desired position.

○The standard adjuster setting for an average-build rider of 68 kg (150 lb) with no passenger and no accessories is the **turns out** from the fully clockwise position.

Damping Adjuster Setting

Standard:

ZX636–B1, ZX600–K1: 4 1/4 turns out

ZX636–B2: 2 turns out

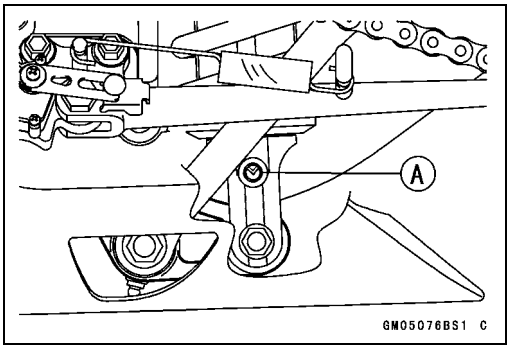

Rebound Damping Force Adjustment

Adjuster Position	Damping Force	Setting	Load	Road	Speed
4 1/2 Turns Out	Weak	Soft	Light	Good	Low
↑	↑	↑	↑	↑	↑
↓	↓	↓	↓	↓	↓
0	Strong	Hard	Heavy	Bad	High

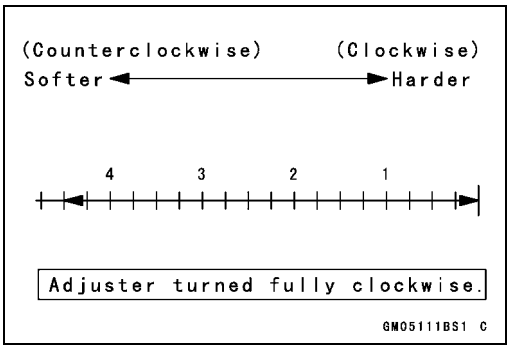

Compression Damping Force Adjustment

- To adjust the compression damping force, turn the upper damping adjuster [A] to the desired position.

○The standard adjuster setting for the average-build rider of 68 kg (150 lb) with no passenger and no accessories is the **turns out** from the fully clockwise position.

Damping Adjuster Setting

Standard:

ZX636–B1, ZX600–K1: 3 1/2 turns out

ZX636–B2: 2 1/2 turns out

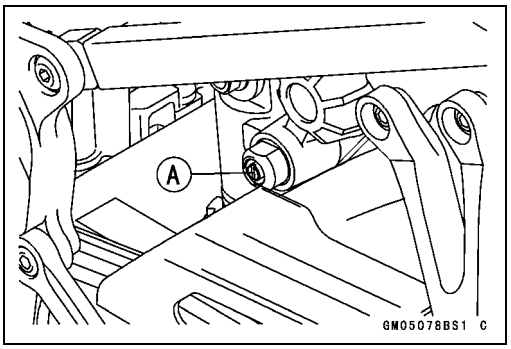

Compression Damping Force Adjustment

Adjuster Position	Damping Force	Setting	Load	Road	Speed
4 Turns Out	Weak	Soft	Light	Good	Low
↑	↑	↑	↑	↑	↑
↓	↓	↓	↓	↓	↓
0	Strong	Hard	Heavy	Bad	High

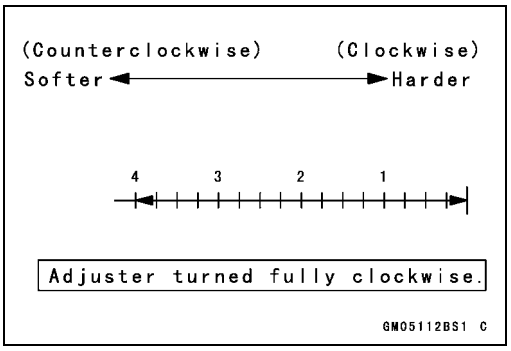

Spring Preload Adjustment

- Remove the rear shock absorber from the frame (see Rear Shock Absorber Removal).
- Loosen the locknut and turn out the adjusting nut to free the spring.

Special Tool - Hook Wrench: 57001-1522 & 57001–1533

Rear Shock Absorber

- To adjust the spring preload, turn in the adjusting nut [A] to the desired position and tighten the locknut [B].
  [C] Spring Length

Spring Preload Setting

Standard:	**Spring length 180 mm (7.0 in.)**
Usable Range:	**Spring length 171.5 ~ 191.5 mm (6.8 ~ 7.5 in.)**

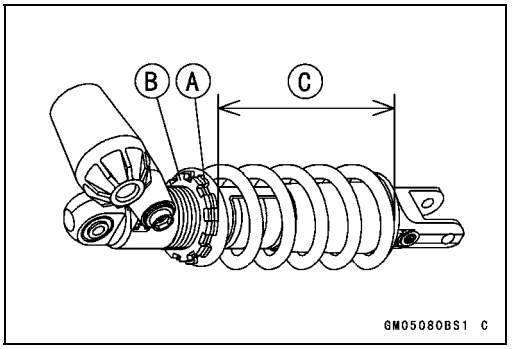

○The standard adjusting nut setting for an average-build rider of 68 kg (150 lb) with no passenger and no accessories is 180 mm (7.0 in.) spring length.

- To adjust the spring preload, turn in the adjusting nut to the desired position and tighten the locknut using by hook wrenches [A] with the rear shock absorber attached the frame.

○Remove the inner fender, chain cover and left foot guard for turning the hook wrench easily.

★If the spring action feels too soft or too stiff, adjust it.

Spring Adjustment

Adjuster Position	Damping Force	Setting	Load	Road	Speed
191.5 mm (7.5 in.)	Weak	Soft	Light	Good	Low
↑	↑	↑	↑	↑	↑
↓	↓	↓	↓	↓	↓
171.5 mm (6.8 in.)	Strong	Hard	Heavy	Bad	High

Special Tool - Hook Wench: 57001–1522 & 1533

Rear Shock Absorber Removal

- Remove the lower fairings (see Frame chapter).
- Using the jack, raise the rear wheel off the ground.

Special Tool - Jack: 57001–1238

- Squeeze the brake lever slowly and it with a band [A].

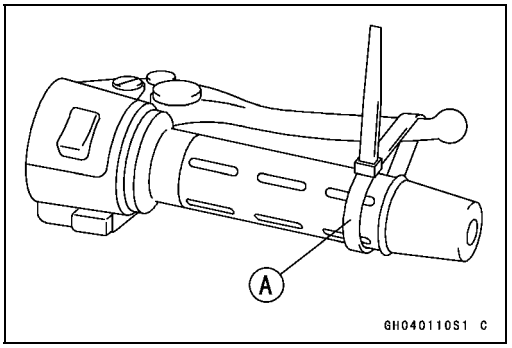

⚠ WARNING

Be sure to hold the front brake when removing the shock absorber, or the motorcycle may fall over. It could cause an accident and injury.

Rear Shock Absorber

- Remove:
  Lower Shock Absorber Bolt [A]
  Upper Tie-Rod Bolt [B]

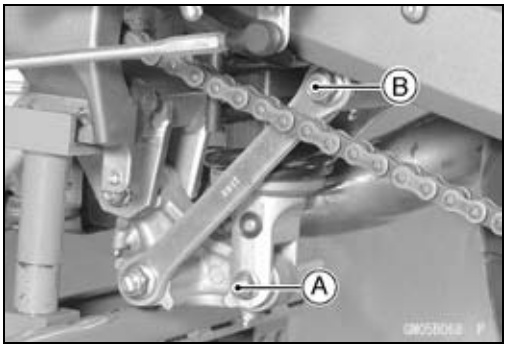

- Remove:
  Upper Shock Absorber Nut [A]
  Upper Shock Absorber Bolt [B]
- Remove the shock absorber upward.

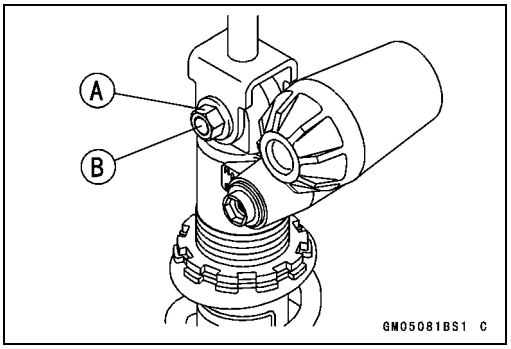

Rear Shock Absorber Installation

- Pack the rocker arm needle bearings with grease.
- Tighten:

Torque - Rear Shock Absorber Nuts: 34 N·m (3.5 kgf·m, 25 ft·lb)
Tie-Rod Nuts: 59 N·m (6.0 kgf·m, 43 ft·lb)

Rear Shock Absorber Inspection

- Remove the rear shock absorber.
- Visually inspect the following items.
  Smooth Stroke
  Oil Leakage
  Crack or Dent

★If there is any damage to the rear shock absorber, replace it.

- Visually inspect the rubber bushing.

★If it show any signs of damage, replace it.

Rear Shock Absorber Scrapping

⚠ WARNING

Since the reservoir tank of the rear shock absorber contains nitrogen gas, do not incinerate the reservoir tank without first releasing the gas or it may explode.

- Remove the valve cap and release the nitrogen gas completely from the gas reservoir.
- Remove the valve [A].

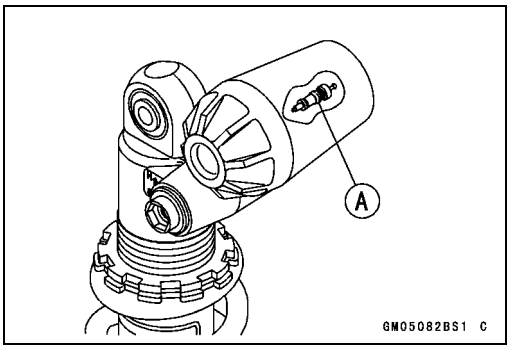

⚠ WARNING

Since the high pressure gas is dangerous, do not point the valve toward your face or body.

Swingarm

Swingarm Removal

- Remove:
  Rear Wheel (see Wheels/Tires chapter)
  Inner Fender (see Frame chapter)
  Chain Cover (see Final Drive chapter)
  Brake Hose Clamps [A]
  Rear Shock Absorber [B] (see Rear Shock Absorber Removal)

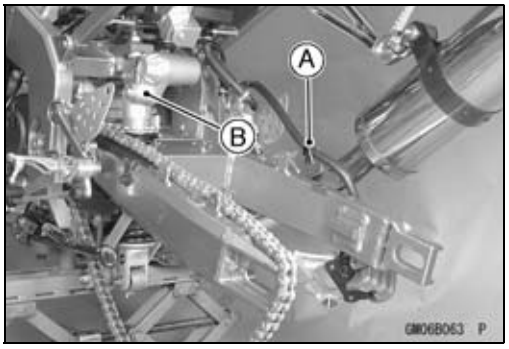

- Unscrew the swingarm pivot shaft locknut using socket wrench [A].

  Special Tool - Swingarm Pivot Nut Wrench: 57001–1541

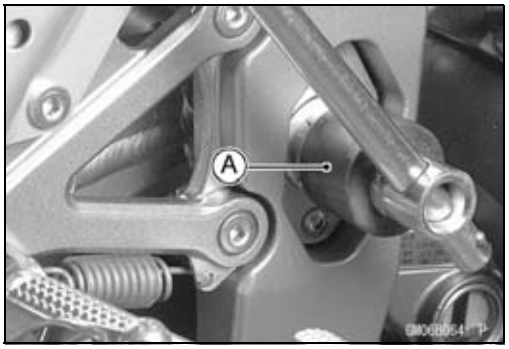

- Unscrew the swingarm pivot shaft nut [A].

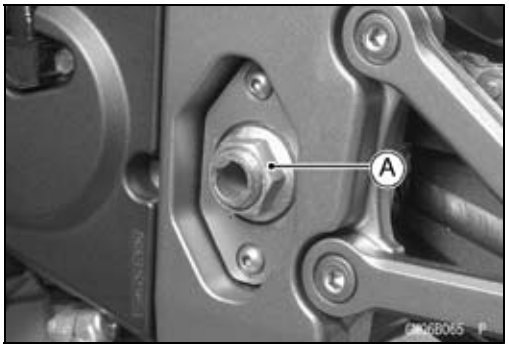

- Unscrew the swingarm pivot shaft [A].
- Pull out the pivot shaft right side of the motorcycle and remove the swingarm.

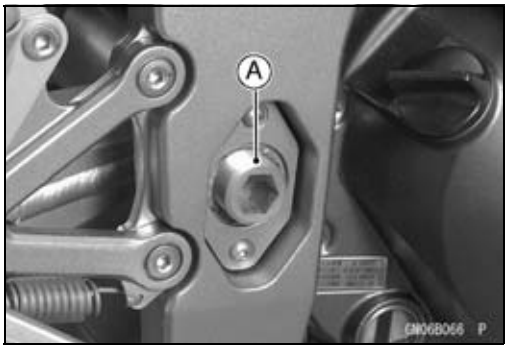

Swingarm Installation

- Apply plenty of grease to the ball bearing, needle bearings and grease seals.
- Install the collar.
- Insert the cap [A] to the chain guide [B].

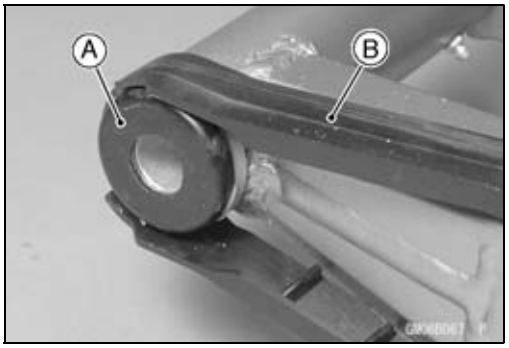

Swingarm

- Place the collar [A] on the stopper [B] inside the frame [C].
- Insert the pivot shaft into the frame from the right side.
- First, tighten the pivot shaft so that the clearance between the collar and the frame come to zero mm (zero in.) [D].

  Torque - Swingarm Pivot Shaft (First): 25 N·m (2.5 kgf·m, 18 ft·lb)

- Loosen the pivot shaft, and tighten the pivot shaft securely so that the clearance between the collar and the frame come to zero mm (zero in.) again with specified torque.

  Torque - Swinagrm Pivot Shaft (Final)
  ZX636: 20 N·m (2.0 kgf·m, 14 ft·lb)
  ZX600: 25 N·m (2.5 kgf·m, 18 ft·lb)

- Tighten the pivot locknut with the swingarm pivot nut wrench.

  Special Tool - Swingarm Pivot Nut Wrench: 57001–1541

  Torque - Swingarm Pivot Shaft Locknut: 98 N·m (10 kgf·m, 72 ft·lb)

- Tighten the pivot shaft nut.

  Torque - Swingarm Pivot Shaft Nut: 108 N·m (11 kgf·m, 81 ft·lb)

- Install the removed parts (see appropriate chapters).

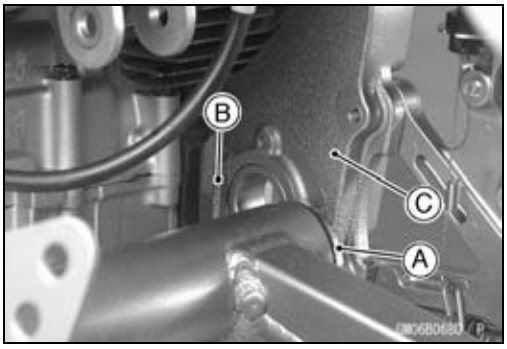

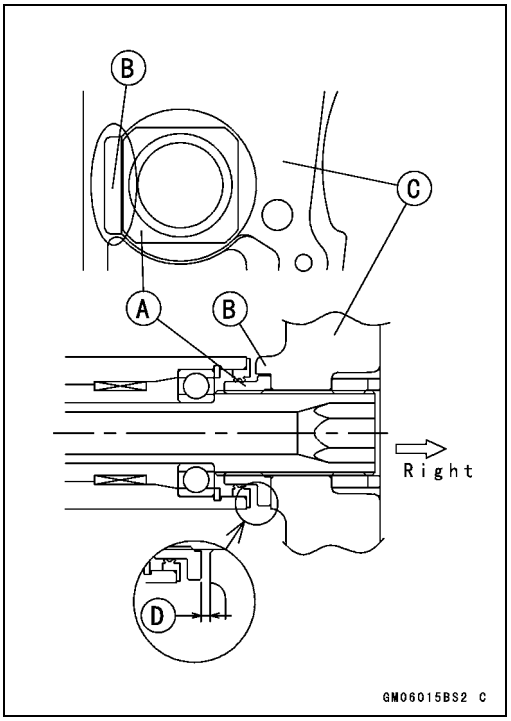

Swingarm Bearing Removal

- Remove:
  Swingarm
  Collar [A]
  Cap [B]
  Grease Seals [C]
  Sleeve [D]
  Circlip (right side) [E]

  Special Tool - Inside Circlip Pliers: 57001–143

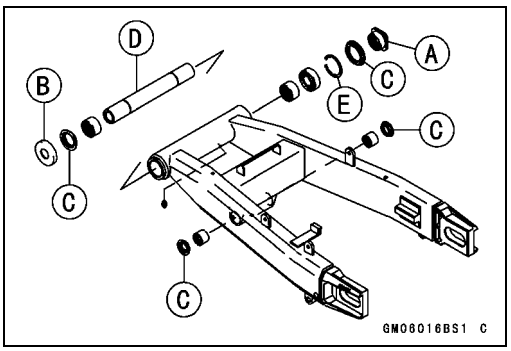

- Remove the ball bearing and needle bearings.

  Special Tool - Oil Seal & Bearing Remover: 57001–1058 [A]

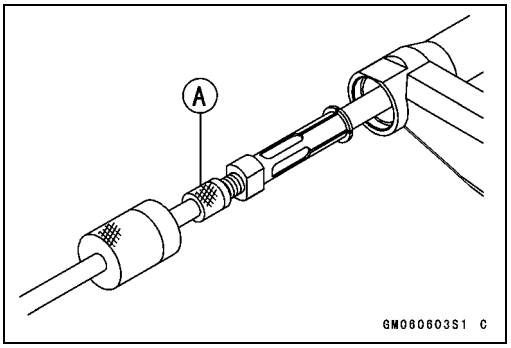

Swingarm

Swingarm Bearing Installation

- Apply plenty of grease to the ball bearing and needle bearings.
- Install the needle bearings so that the manufacturer's marks faces out.
- Install the ball bearing so that the manufacturer's marks faces out.

Special Tool - Bearing Driver Set: 57001–1129 [A]

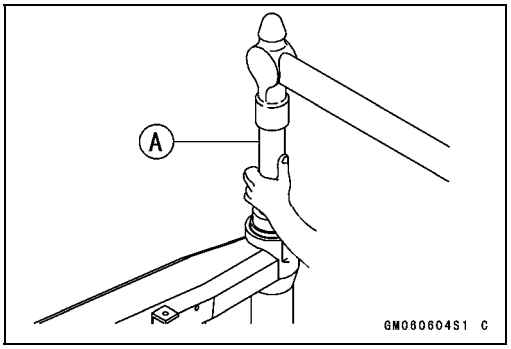

Swingarm Bearing, Sleeve Inspection

CAUTION
Do not remove the bearings for inspection. Removal may damage them.

- Inspect the needle bearings [A] and ball bearing [B] installed in the swingarm.

○The rollers and ball in a bearing normally wear very little, and wear is difficult to measure. Instead of measuring, visually inspect the bearing for abrasion, discoloration, or other damage.

★If the needle bearing, ball bearing, and sleeve show any sings of abnormal wear, discoloration, or damage, replace them as a set.

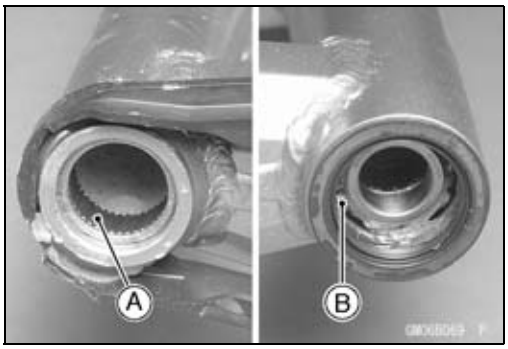

Swingarm Pivot Lubrication

- Refer to the Suspension in the Periodic Maintenance chapter.

Chain Guide Inspection

- Visually inspect the chain guide [A].

★Replace the chain slider if it shows any signs of abnormal wear or damage.

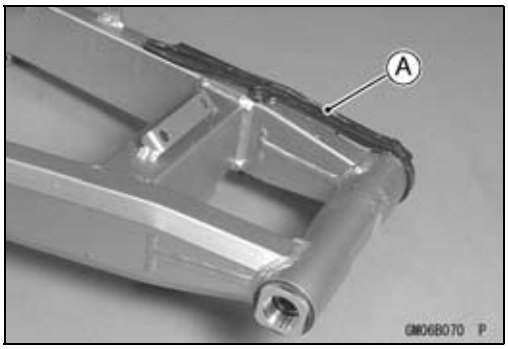

Tie-Rod, Rocker Arm

Tie-Rod Removal

- Remove the lower fairings (see Frame chapter).
- Squeeze the brake lever slowly and hold it with a band [A].

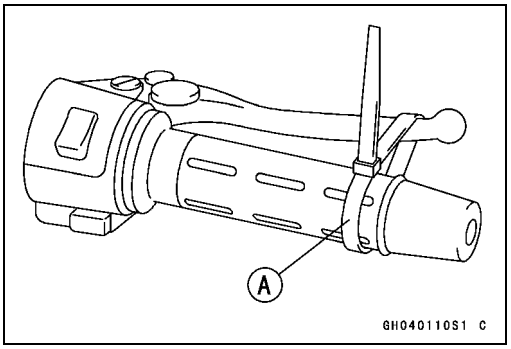

- Using the jack, raise the rear wheel off the ground.

  Special Tool - Jack: 57001–1238

- Remove:
  Upper Tie-Rod Bolt and Nut [A]
  Lower Tie-Rod Bolt and Nut [B]
  Tie-Rods [C]

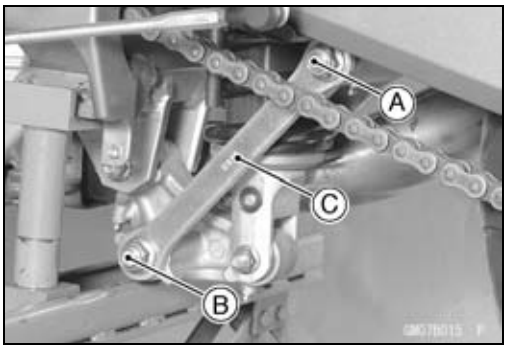

Tie-Rod Installation

- Apply grease to the inside of the needle bearings and grease seals.
- Install the tie-rods so that the chamfered side faces the bolts and nuts.
- Tighten:

  Torque - Tie-Rod Nuts: 59 N·m (6.0 kgf·m, 43 ft·lb)

Rocker Arm Removal

- Remove the lower fairings (see Frame chapter)
- Squeeze the brake lever slowly and hold it with a band.
- Using the jack, raise the rear wheel off the ground.

  Special Tool - Jack: 57001–1238

- Remove:
  Lower Rear Shock Absorber Bolt and Nut [A]
  Lower Tie-Rod Bolt and Nut [B]
  Rocker Arm Bolt and Nut [C]
  Rocker Arm [D]

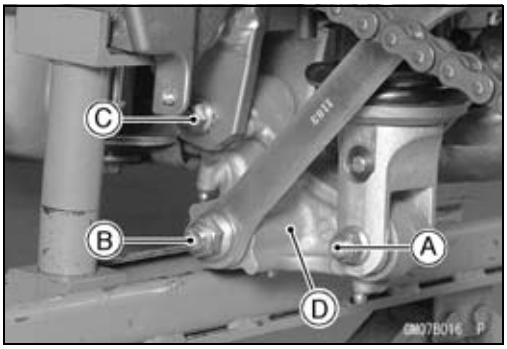

Rocker Arm Installation

- Apply grease to the inside of the needle bearings grease seals, and add grease to the grease nipple.
- Tighten:

  Torque - Rocker Arm Nut: 34 N·m (3.5 kgf·m, 25 ft·lb)
  Tie-Rod Nut: 59 N·m (6.0 kgf·m, 43 ft·lb)
  Rear Shock Absorber Nut: 34 N·m (3.5 kgf·m, 25 ft·lb)

Tie-Rod, Rocker Arm

Rocker Arm/Tie-Rod Bearing, Sleeve Inspection

CAUTION
Do not remove the bearings for inspection. Removal may damage them.

- Visually inspect the swingarm sleeves and needle bearings.
- The rollers in a needle bearing normally wear very little, and wear is difficult to measure. Instead of measuring, inspect the bearing for abrasion, color change, or other damage.

★If there is any doubt as to the condition of any of the needle bearings or sleeve, replace the sleeve, and needle bearings as a set.

Rocker Arm/Tie-Rod Lubrication

○Refer to the Suspension in the Periodic Maintenance chapter.

Steering

Table of Contents

Exploded View 14-2
Special Tools 14-4
Steering 14-5
    Steering Inspection 14-5
    Steering Adjustment 14-5
Steering Stem 14-6
    Stem, Stem Bearing Removal 14-6
    Stem, Stem Bearing Installation 14-6
    Stem Bearing Lubrication 14-8
    Steering Stem Warp 14-9
Handlebar 14-10
    Handlebar Removal 14-10
    Handlebar Installation 14-10

Exploded View

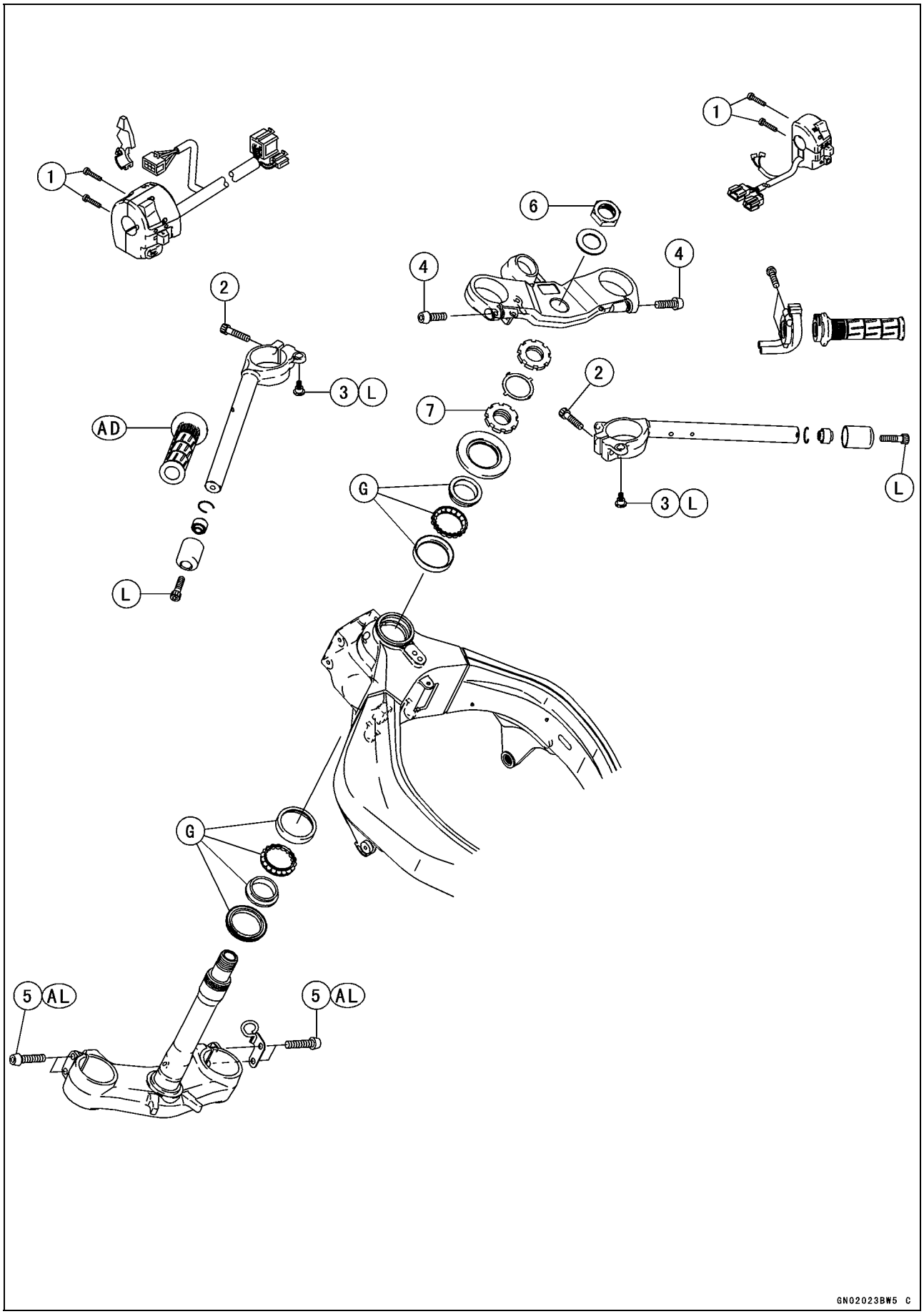

Exploded View

No.	Fastener	Torque			Remarks
		N·m	kgf·m	ft·lb	
1	Handlebar switch housing screws	3.5	0.36	31 in·lb	
2	Handlebar bolts	25	2.5	18	
3	Handlebar position bolts	9.8	1.0	87 in·lb	L
4	Front fork clamp bolts (Upper)	20	2.0	14.5	
5	Front fork clamp bolts (Lower)	20	2.0	14.5	AL
6	Steering stem head nut	78	8.0	58	
7	Steering stem nut	20	2.0	14.5	

AL: Tighten the two clamp bolts alternately two times to ensure even tightening torque.
AD: Apply adhesive.
G: Apply grease.
L: Apply a non-permanent locking agent.

Special Tools

Head Pipe Outer Race Press Shaft:
57001–1075

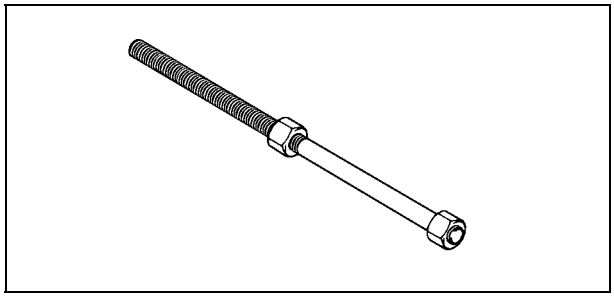

Steering Stem Nut Wrench:
57001–1100

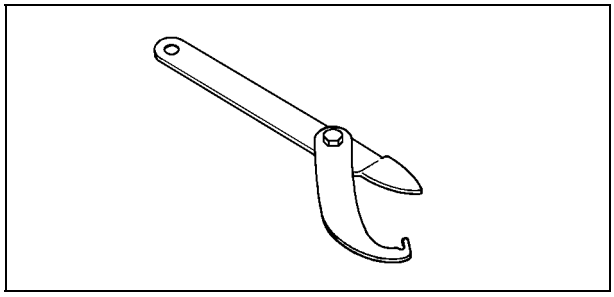

Jack:
57001–1238

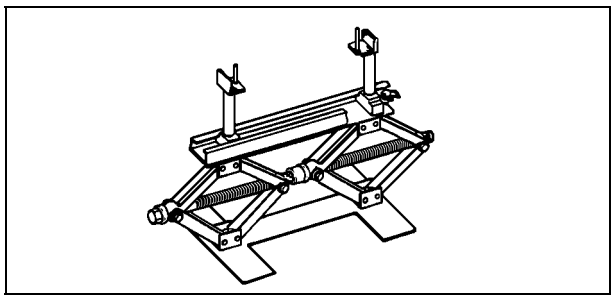

Steering Stem Bearing Driver:
57001–1344

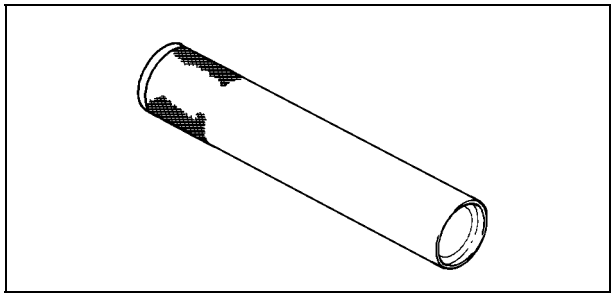

Steering Stem Bearing Driver Adapter:
57001–1345

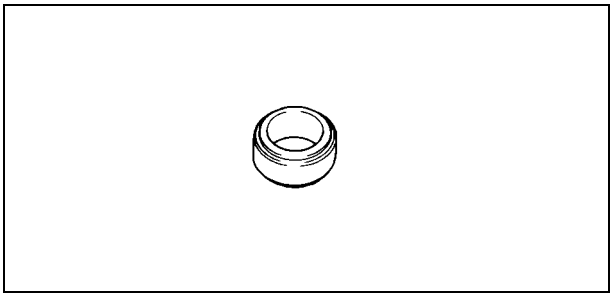

Head Pipe Outer Race Driver:
57001–1446

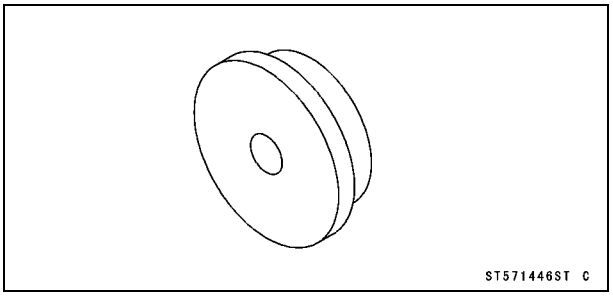

Head Pipe Outer Race Driver:
57001–1447

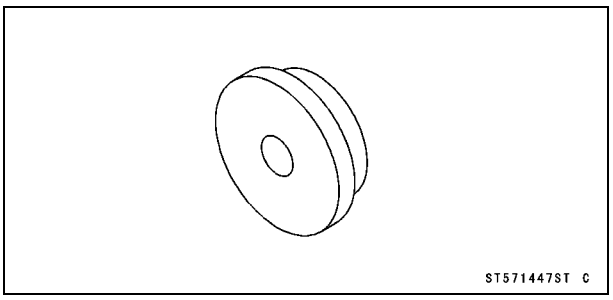

Steering

Steering Inspection

○Refer to the Steering in the Periodic Maintenance chapter.

Steering Adjustment

○Refer to the Steering in the Periodic Maintenance chapter.

Steering Stem

Stem, Stem Bearing Removal

- Remove:
  Fairings (see Frame chapter)
  Fuel Tank (see Fuel System (DFI) chapter)
  Brake Hose Clamp Bolt [A]
  Left/Right handlebar Switch Leads Clamp Bolt [A]
  Clutch Cable Clamp Bolt [B]
  Front Wheel (see Wheels/Tires chapter)
  Front Fork (see Suspension chapter)
  Steering Stem Head Nut and Washer
  Steering Stem Head and Handlebars

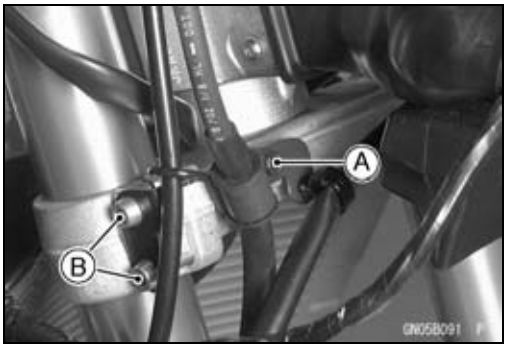

- Pushing up the stem base, and remove the steering stem lock nut[A].
- Bend the claw of lock washer[B] faced steering stem lock nut to straight.

  Special Tool - Steering Stem Nut Wrench: 57001–1100

- Remove the lock washer, steering stem nut[C] and stem cap[D],then remove the steering stem[E].
- Remove the upper ball bearing inner race.

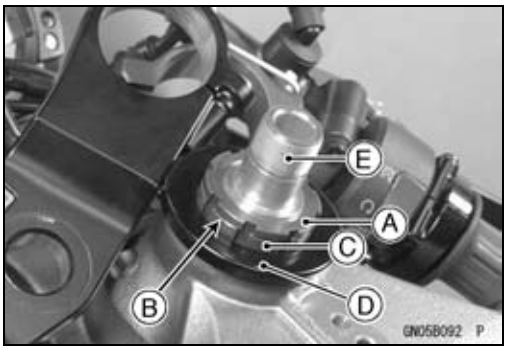

- To remove the bearing outer races [A] pressed into the head pipe [B], insert a bar [C] into the recesses [D] of head pipe, and applying it to both recess alternately hammer it to drive the race out.

NOTE

○*If either steering stem bearing is damaged, it is recommended that both the upper and lower bearings (including outer races) should be replaced with new ones.*

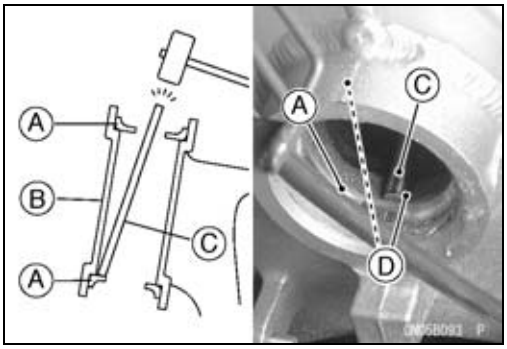

- Remove the lower bearing inner race (with its grease seal) which is pressed onto the steering stem with a suitable commercially available bearing puller.

Stem, Stem Bearing Installation

- Replace the bearing outer races with new ones.
- Apply grease to the outer races, and drive them into the head pipe at the same time.

  Special Tools - Head Pipe Outer Race Press Shaft: 57001–1075 [A]
  Head Pipe Outer Race Drivers: 57001–1446 [B]
  Head Pipe Outer Race Driver: 57001–1447 [C]

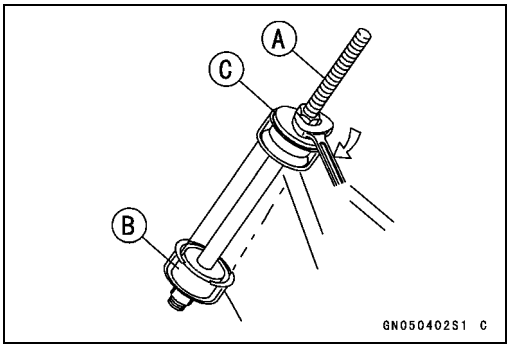

Steering Stem

- Replace the bearing inner races with new ones.
- Install the oil seal [D] on the steering stem, and drive the lower ball bearing inner race [A] applied the grease onto the stem.

Special Tools - Steering Stem Bearing Driver: 57001–1344 [B]
Steering Stem Bearing Driver Adapter: 57001–1345 [C]

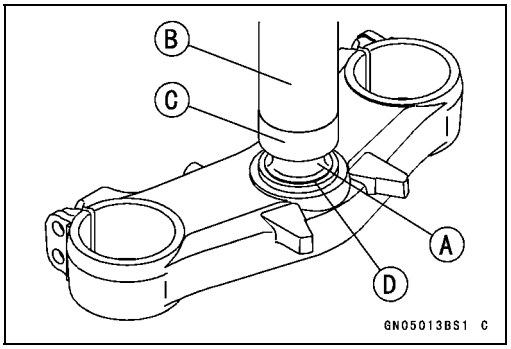

- Install the lower ball bearing [A] onto the stem.
- Apply grease to the upper ball bearing [B] and inner race [C].
- Install the stem through the head pipe and install the ball bearing and inner race on it.

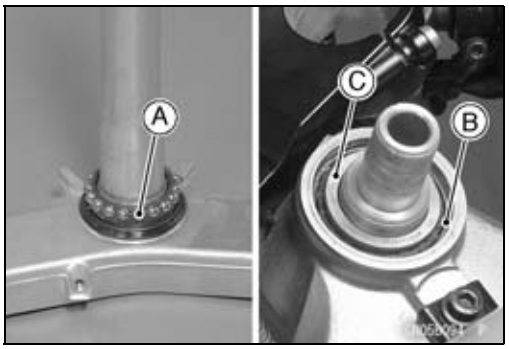

- Install the stem cap [A], lock washer [B] and steering stem nut [C] and hand tighten it and steering stem lock nut [D].
- Install the stem head.
- Install the washer [E], and tighten the stem head nut [F] lightly.

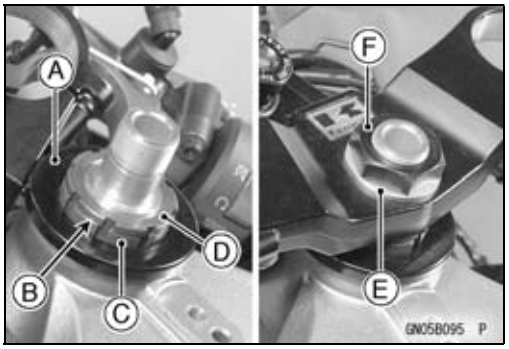

Steering Stem

- Settle the bearings in place as follows:

○Tighten the steering stem nut with 20 N·m (2.0 kgf·m, 14.5 ft·lb) of torque first, and loosen it a fraction of a turn until it turns lightly. (To tighten the stem nut to the specified torque, hook the wrench on the stem nut, and pull the wrench at the hole by 11.1 kg (24.5 lb) [B] force in the direction shown.) Afterward tighten it again with specified torque using a special tool [A].

- Install the lock washer so that claw of washer fit the notch of steering stem nut.
- First tighten the steering stem lock nut by hand until the resistance is felt fully, then tighten the steering stem nut additional more than two notches so that align the notch of stem and stem lock nuts with specified torque.

○Check that there is no play and the steering stem turns smoothly without rattles. If not, the steering stem bearing may be damaged.

○Again back out the stem lock nut a fraction of turn until it turns lightly.

- Turn the stem lock nut lightly clockwise until it just becomes hard to turn. Do not overtighten, or the steering will be too tight.
- Bend the claw of lock washer to steering stem lock nut notch.

Special Tool - Steering Stem Nut Wrench: 57001–1100 [A]

Torque - Steering Stem Nut: 20 N·m (2.0 kgf·m, 14.5 ft·lb)

- Install the stem head.
- Install the washer, and tighten the stem head nut with specified torque.
- Install the front fork (see Suspension chapter).

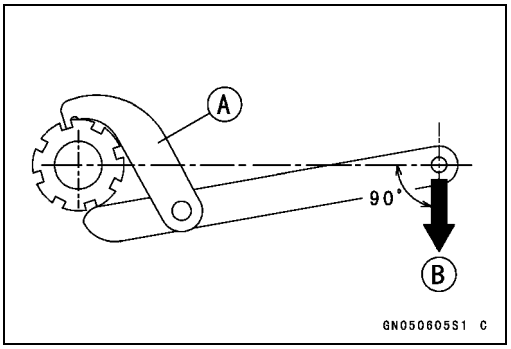

NOTE

○*Tighten the fork upper clamp bolts first, next the stem head nut, last the fork lower clamp bolts.*

○*Tighten the two lower fork clamp bolts alternately two times to ensure even tightening torque.*

Torque - Steering Stem Head Nut : 78 N·m (8.0 kgf·m, 58 ft·lb)
Front Fork Clamp Bolts (Upper) : 20 N·m (2.0 kgf·m, 14.5 ft·lb)
Front Fork Clamp Bolts (Lower) : 20 N·m (2.0 kgf·m, 14.5 ft·lb)

⚠ WARNING

Do not impede the handlebar turning by routing the cables, harnesses and hoses improperly (see Appendix chapter).

Stem Bearing Lubrication

○Refer to the Steering in the Periodic Maintenance chapter.

Steering Stem

Steering Stem Warp

- Whenever the steering stem is removed, or if the steering can not be adjusted for smooth action, check the steering stem for straightness.

★If the steering stem [A] is bent, replace the steering stem.

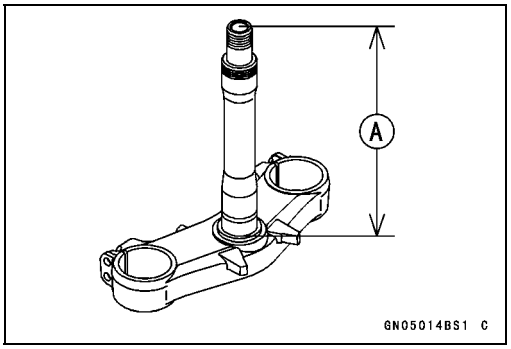

Handlebar

Handlebar Removal

- Remove:
  Clutch Lever Assembly [A]
  Left Handlebar Switch Housing [B]
  Front Brake Master Cylinder [C]
  Right handlebar Switch Housing [D]
  Throttle Case [E]

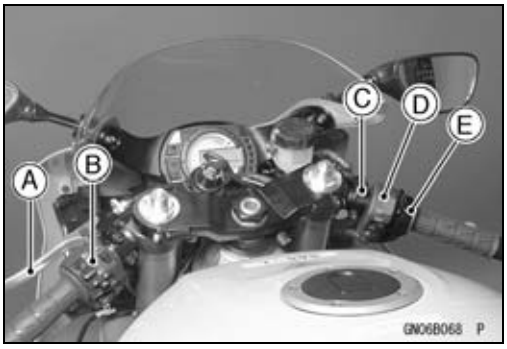

- Remove:
  Weight Bolts [A]
  Handlebar Weight [B]
  Fitting [C]
  Clip [D]

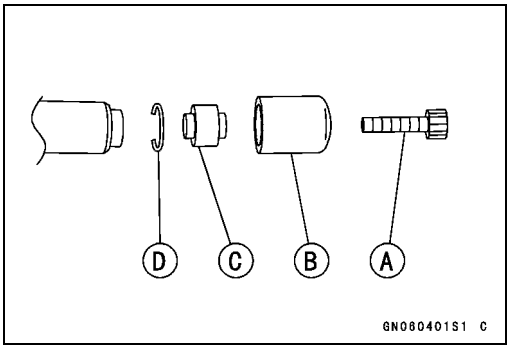

- Remove:
  Steering Stem Head [A]
  Throttle Grip
  Left Handlebar Grip
  Handlebar Bolts [B]
  Handlebar Position Bolt [C]
- Remove the handlebars [D].

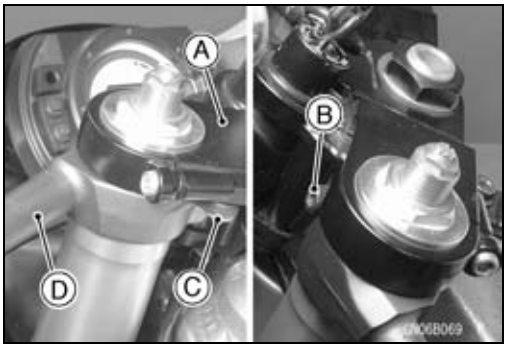

Handlebar Installation

- Apply adhesive cement to the inside of the left handlebar grip.
- Apply a non-permanent locking agent to the threads of the handlebar position bolts and weight bolts, and tighten them with specified torque.

  Torque - Handlebar Bolts: 25 N·m (2.5 kgf·m, 187 in·lb)
  Handlebar Position Bolts: 9.8 N·m (1.0 kgf·m, 87 in·lb)

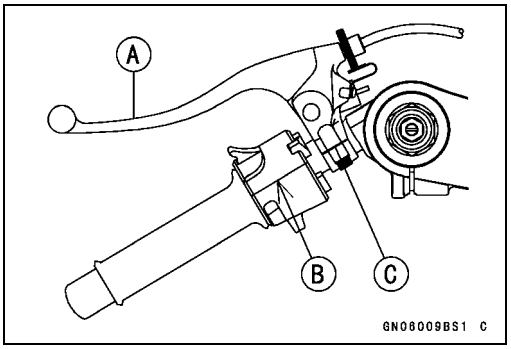

- Install the front brake master cylinder (see Brakes chapter).
- Install the clutch lever [A] so that the mating surface [B] of the left handlebar switch housing is aligned with the mating surface [C] of the clutch lever clamp.
- Tighten the upper clamp bolt first, and then the lower clamp bolt. There will be a gap at the lower part of the clamp after tightening.

  Torque - Clutch Lever Clamp Bolts: 7.8 N·m (0.80 kgf·m, 69 in·lb)
  Handlebar Switch Housing Screws: 3.5 N·m (0.36 kgf·m, 31 in·lb)

- Install the removed parts (see appropriate chapters).

Frame

Table of Contents

Exploded View 15-2
Seats 15-8
Rear Seat Removal 15-8
Rear Seat Installation 15-8
Front Seat Removal 15-8
Front Seat Installation 15-8
Fairings 15-9
Lower Fairing Removal 15-9
Inner (Upper) Fairing Removal 15-9
Inner (Lower) Fairing Removal 15-9
Upper Fairing Removal 15-9
Seat Cover 15-11
Seat Cover Removal 15-11
Seat Cover Installation 15-11
Fenders 15-12
Front Fender Removal 15-12
Front Fender Installation 15-12
Flap and Rear Fender Rear Removal 15-12
Flap and Rear Fender Rear Installation 15-12
Rear Fender Front Removal 15-13
Rear Fender Front Installation 15-13
Inner Fender Removal 15-13
Inner Fender Installation 15-13
Frame 15-14
Rear Frame Removal 15-14
Rear Frame Installation 15-14
Frame Inspection 15-14
Storage Box 15-15
Storage Box Removal 15-15
Storage Box Installation 15-15
Side Stand 15-16
Side Stand Removal 15-16
Side Stand Installation 15-16

Exploded View

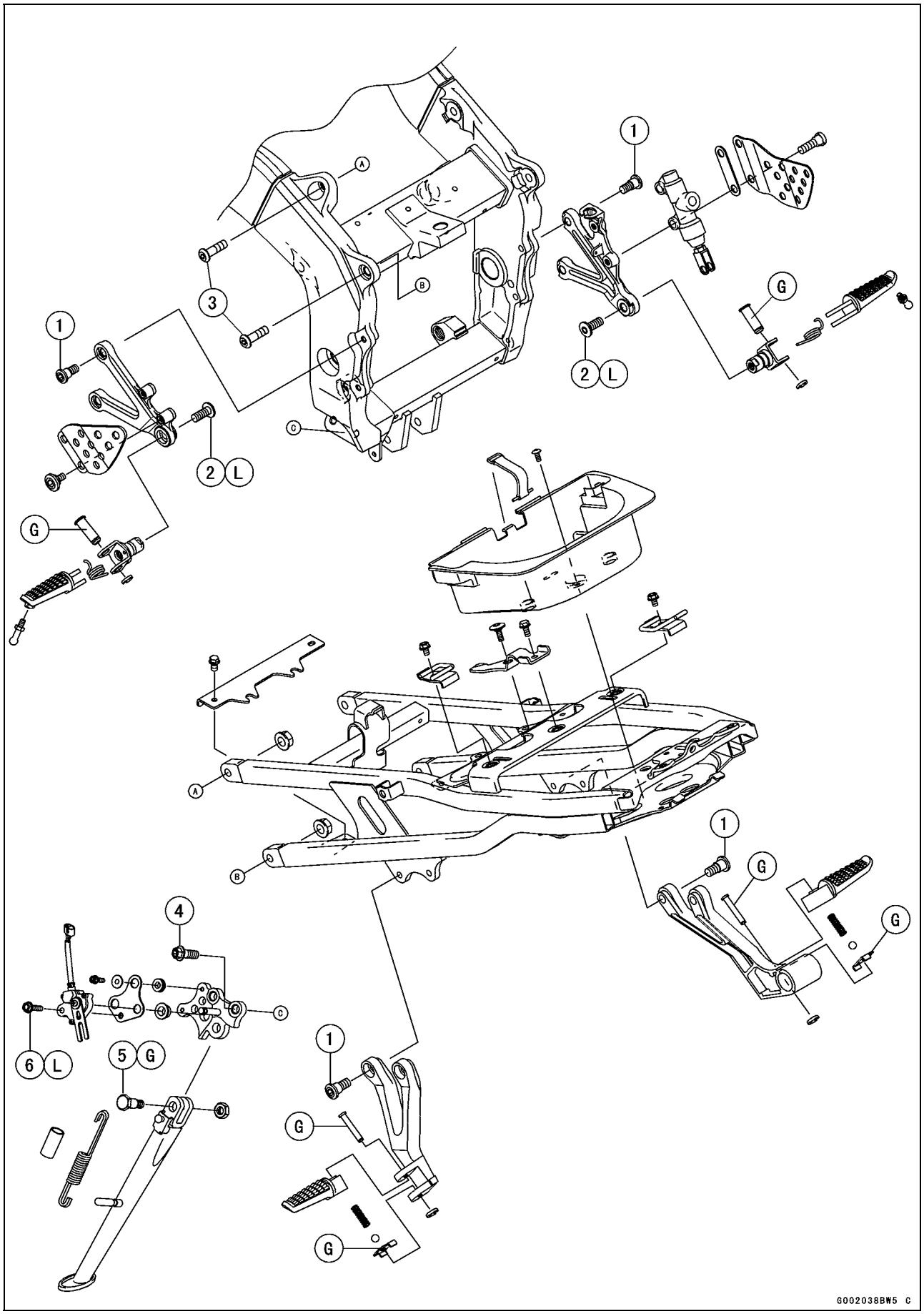

Exploded View

No.	Fastener	Torque			Remarks
		N·m	kgf·m	ft·lb	
1	Footpeg stay bolts	25	2.5	18	
2	Footpeg holder bolts	34	3.5	25	L
3	Rear frame bolts	59	6.0	43	
4	Side stand bracket bolts	49	5.0	36	
5	Side stand bolt	44	4.5	32	G
6	Side stand switch bolt	8.8	0.90	78 in·lb	L

G: Apply grease.
L: Apply a non-permanent locking agent.

Exploded View

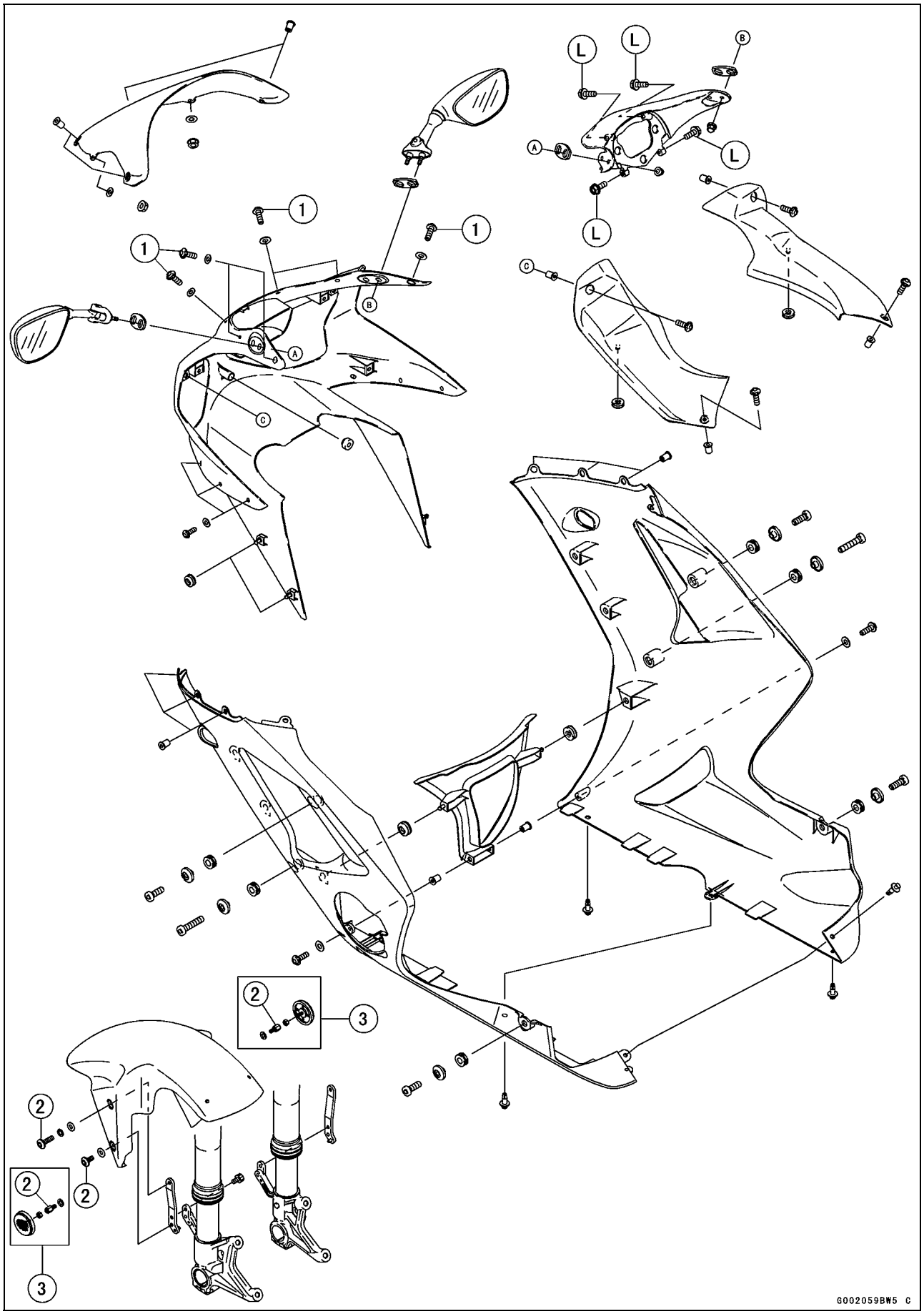

Exploded View

No.	Fastener	Torque			Remarks
		N·m	kgf·m	ft·lb	
1	Wind shield mounting screws	0.4	0.04	3.5 in·lb	
2	Front fender mounting bolts	3.9	0.40	35 in·lb	

3. United States and Canada Models
L: Apply a non-permanent locking agent.

Exploded View

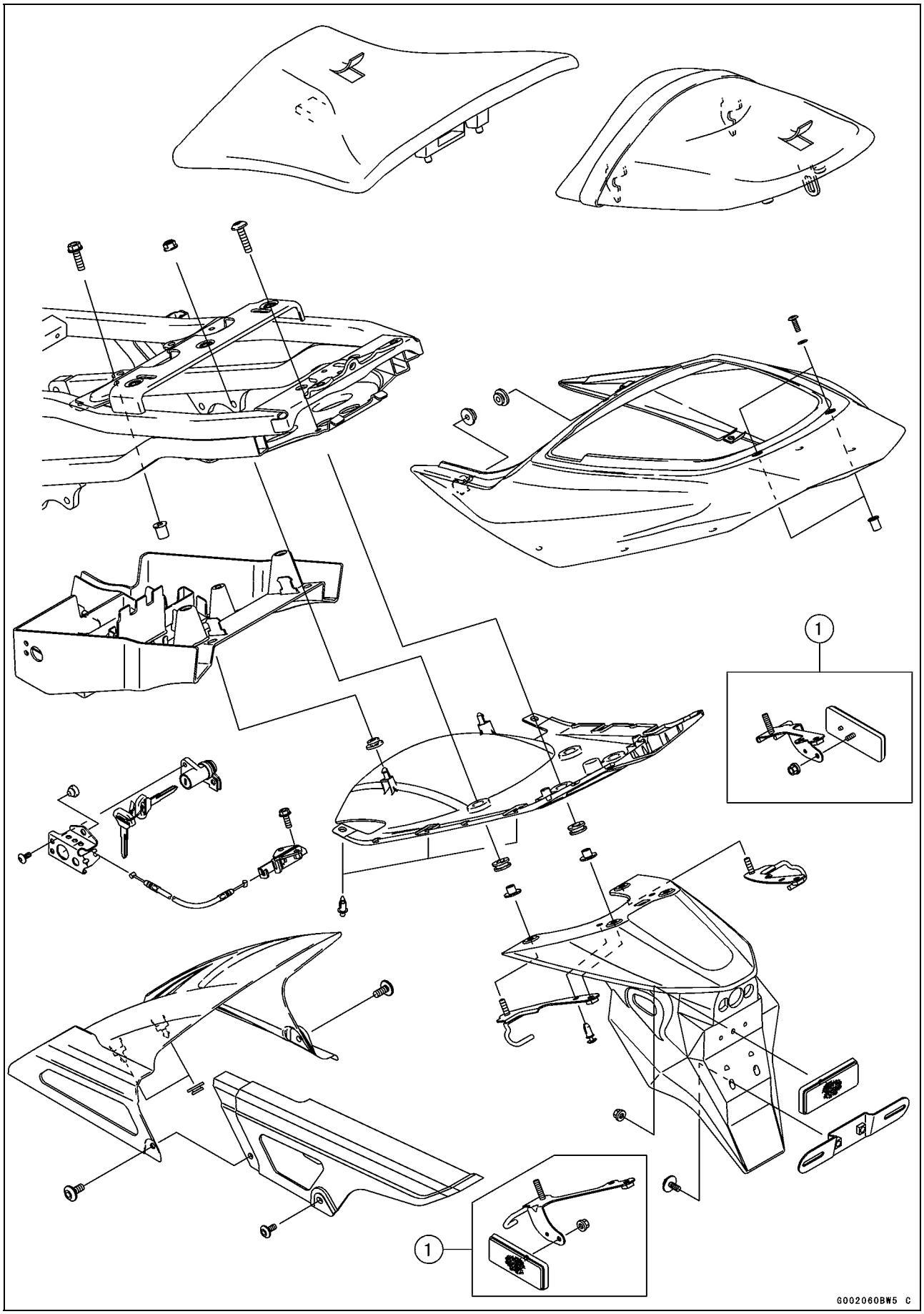

Exploded View

1. United States and Canada Models

Seats

Rear Seat Removal

- Insert the ignition switch key into the seat lock [A], turning the key counterclockwise, pulling the rear of the seat [B] up, and pull the seat backward.

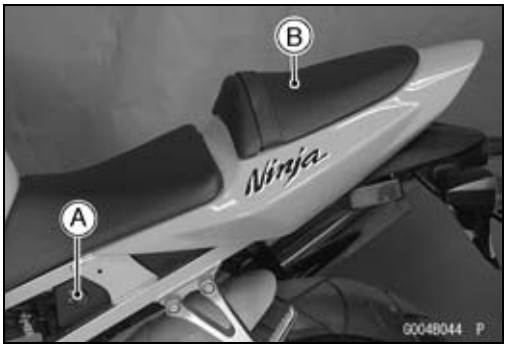

Rear Seat Installation

- Slip the rear seat hooks [A] into the slend holes [B] on the frame.
- Insert the seat pin [C] into the latch hole [D].
- Push down the rear part of the seat until the lock clicks.

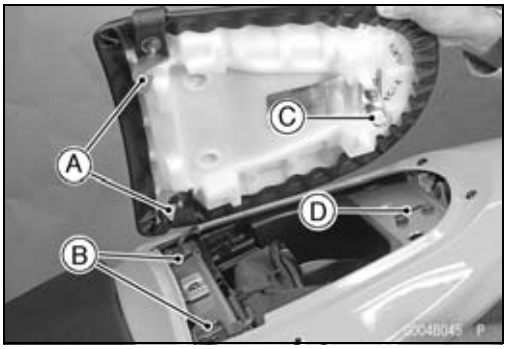

Front Seat Removal

- Remove:
  Rear Seat (see Rear Seat Removal)
  Mounting Bolt [A]
  Set Bracket (rear) [B]
- Remove the front seat [C] by pulling the rear of it up and backward.

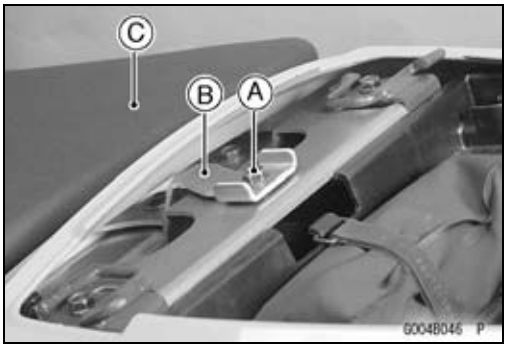

Front Seat Installation

- Slip the front seat hook [A] under the brace [B] of the seat bracket (front).

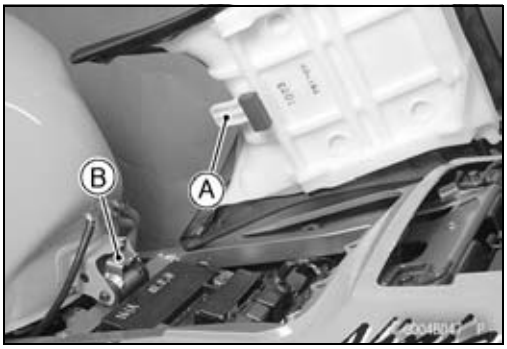

Fairings

Lower Fairing Removal

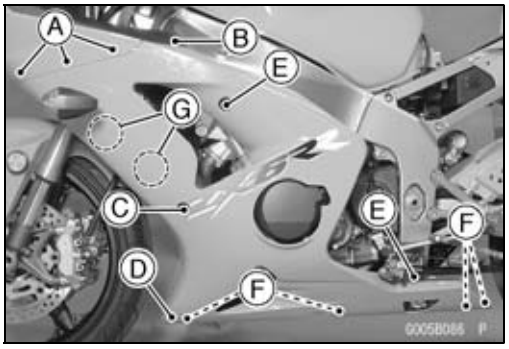

- Remove:
  Allen Bolts [A] [B] [C] [D] [E]
  Rivet Screws [F]
- Pull the lower front part of the lower fairing outward to clear the stoppers [G].
- Remove the lower fairing.
- Remove the other side lower fairing in the same manner.

NOTE

○*When removing the left and right lower fairings at the same time, do not remove the screws [D] (both sides) and bottom of stoppers [G].*

Inner (Upper) Fairing Removal

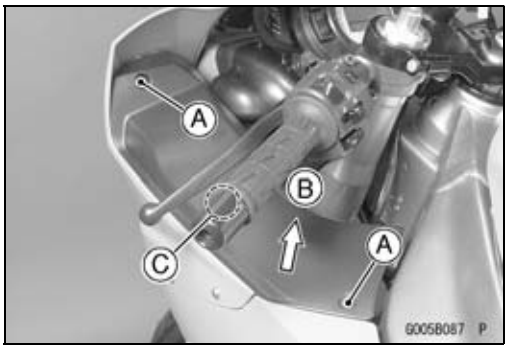

- Remove the allen bolts [A].
- Pull the inner (upper) fairing upward [B] to clear the stoppers [C].

Inner (Lower) Fairing Removal

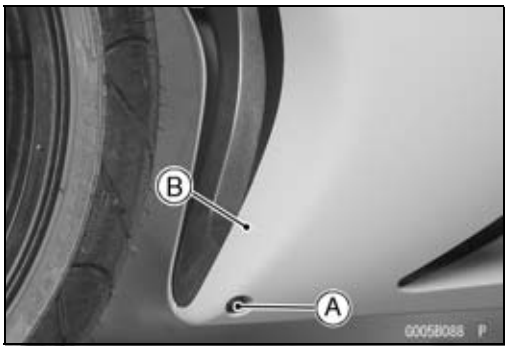

- Remove:
  Lower Fairing (Left or Right)
  Other Side Inner Fairing Bolt [A]
  Inner (Lower) Fairing [B]

Upper Fairing Removal

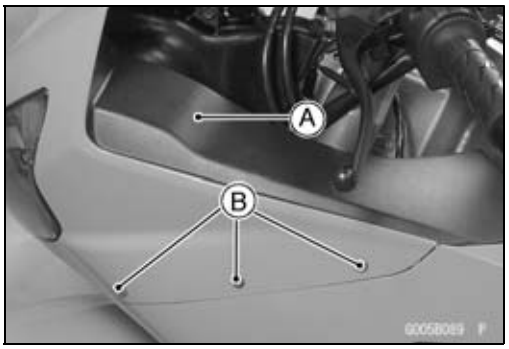

- Remove:
  Inner (Upper) Fairings [A]
  Allen Bolts [B] (Left and Right)

Fairings

- Remove:
  Nuts [A] (Left and Right)
  Rear View Mirrors [B] (Left and Right)

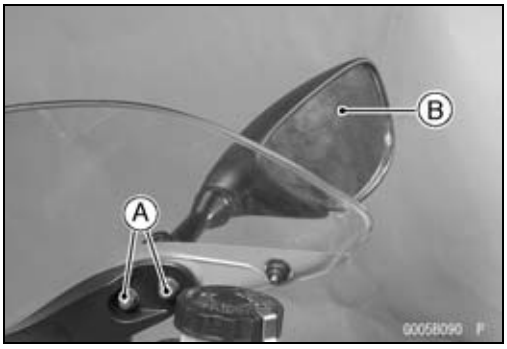

- Remove:
  Headlight Lead Connector [A]
  Turn Signal Light Lead Connector [B]
  Upper Fairing

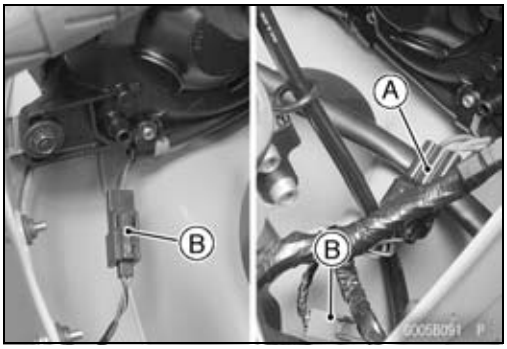

Seat Cover

Seat Cover Removal

- Remove:
  Seats
  Screws and Washers [A]
  Rivet Screws [B] (Left and Right)
- Pull the seat cover backward to clear the stoppers [C].

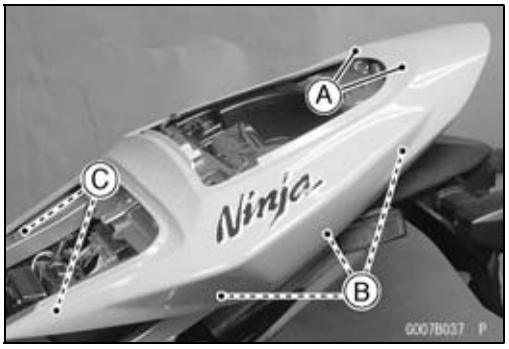

Seat Cover Installation

- Set the seat cover [A], and insert the rivet screws [B] into the holes in the seat cover and rear fender rear.
- Screw in the pins [C] into the rivet.
- Fit the projection [D] on the seat cover into the rear frame bracket.
- Tighten the screws [E].
- Install the seats.

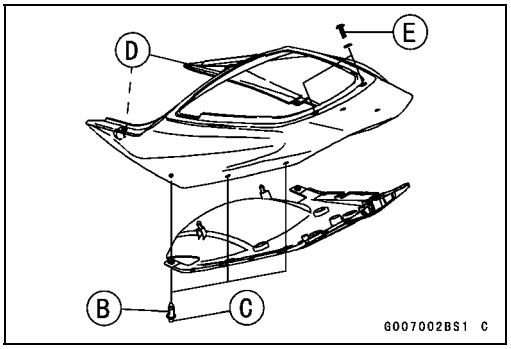

Fenders

Front Fender Removal

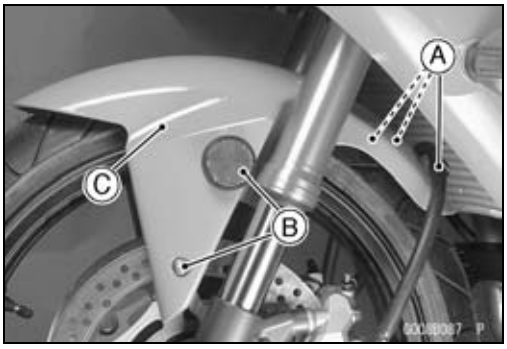

- Remove:
  Brake Hose Clamps [A] (Left and Right)
  Bolts [B] (Left and Right)
- Remove the front fender [C].

Front Fender Installation

- Install the front fender to the front fork.
- Tighten:

  Torque - Front Fender Mounting Bolts: 3.9 N·m (0.40 kgf·m, 35 in·lb)

- Install the brake hose clamps to the front fender holes.

Flap and Rear Fender Rear Removal

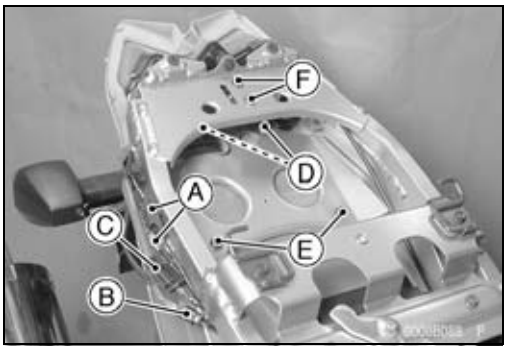

- Remove:
  Seats (see Rear/Front Seat Removal)
  Seat Cover (see Seat Cover Removal)
  Storage Box (see Storage Box Removal)
- Disconnect:
  Rear Turn Signal Light Lead Connectors [A] (Left and Right)
  License Light Lead Connector [B]
  Tail/Brake Light Lead Connector [C]
- Remove:
  Allen Bolts [D]
  Nuts [E]
  Seat Lock Bolts [F]

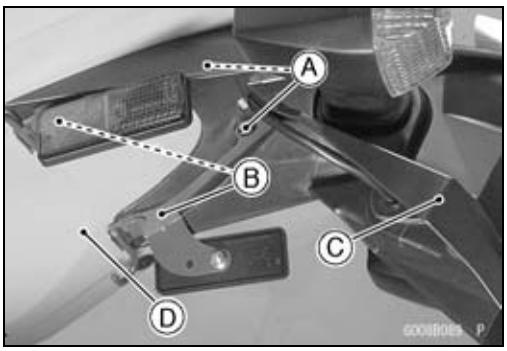

- Remove the rivet screws [A] to take off the brackets [B] and flap [C] assembled the rear turn signals and license light.
- Pull out the rear fender rear [D] assembled tail/brake light downward.

Flap and Rear Fender Rear Installation

- Insert the projection of rear fender rear under the rear fender front.
- Install the front part of the flap under the rear fender rear.
- Install the harness clamp in accordance with Harness Routing section in Appendix chapter.

Fenders

Rear Fender Front Removal

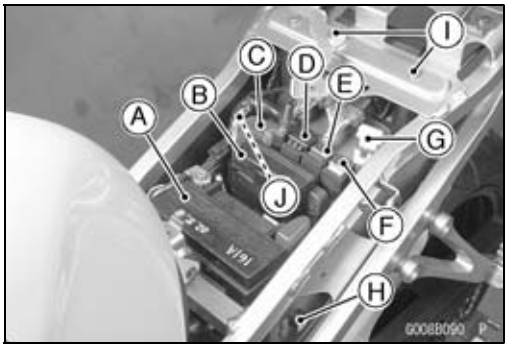

- Remove:
  Flap
  Rear Fender Rear
  Battery [A]
  Junction Box [B]
  Starter Relay Assy [C]
  Turn Signal Relay [D]
  Fuel Pump Relay [E]
  ECU Main Relay [F]
  ECU Fuse Holder [G]
  Seat Lock [H]
- Remove the bolts [I] and main harness clamp [J].
- Pull out the rear fender front downward.

Rear Fender Front Installation

- Install the removed parts.
- Run the harness correctly (see Appendix chapter).

Inner Fender Removal

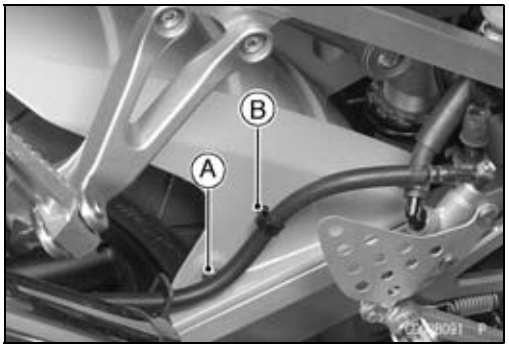

- Remove:
  Allen Bolts (Left and Right) [A]
  Brake Hose Clamp [B]
- Pull out the inner rear fender from the swingarm.

Inner Fender Installation

- Insert the projections of the inner fender to the swingarm.
- Tighten the allen bolts (left and right).
- Insert the brake hose clamp to the inner fender hole.

Frame

Rear Frame Removal

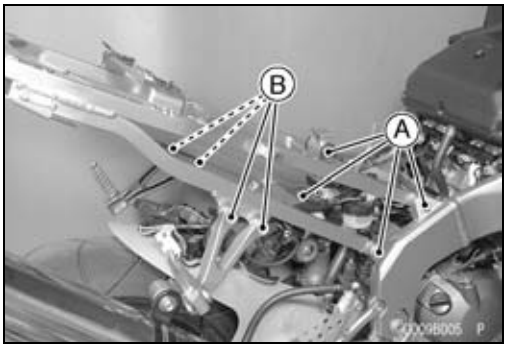

- Remove:
  Fuel Tank (see Fuel System (DFI) chapter)
  Flap and Rear Fender Rear (see Flap and Rear Fender Rear Removal)
  Rear Fender Front (see Rear Fender Front Removal)
  Clamps for Main Harness
  Frame Bolts and Nuts [A]
  Rear Step Bracket Bolts [B]

Rear Frame Installation

- Tighten:

Torque - Rear Frame Bolts and Nuts: 59 N·m (6.0 kgf·m, 43 ft·lb)
Rear Step Brackets Bolts: 25 N·m (2.5 kgf·m, 19 ft·lb)

Frame Inspection

- Visually inspect the frame for cracks, dents, bending, or warp.

★If there is any damage to the frame, replace it.

⚠ WARNING

A repaired frame may fail in use, possibly causing an accident. If the frame is bent, dented, cracked, or warped, replace it.

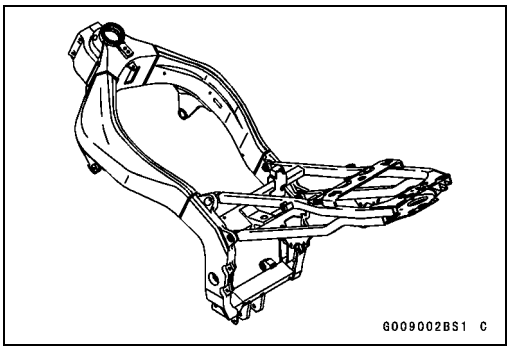

Storage Box

Storage Box Removal

- Remove:
  Seat Cover (see this chapter)
  Screw [A]
- Pulling up the rear part of the box backward.

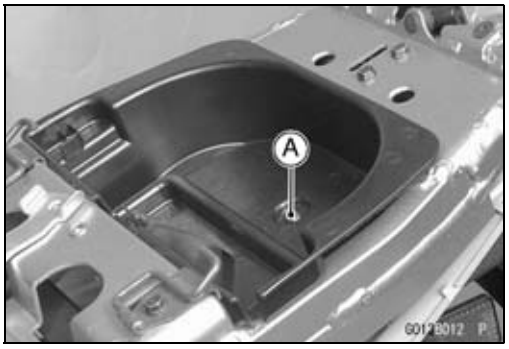

Storage Box Installation

- Insert the front part [A] of the box into the rear frame [B].
- Tighten the screws.

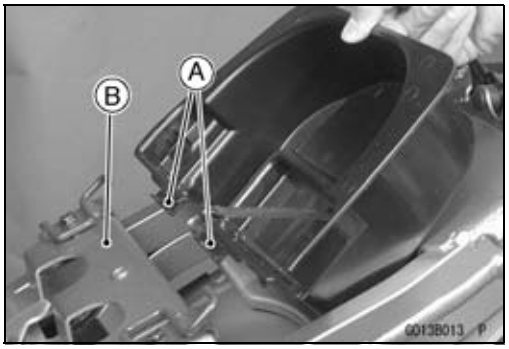

Side Stand

Side Stand Removal

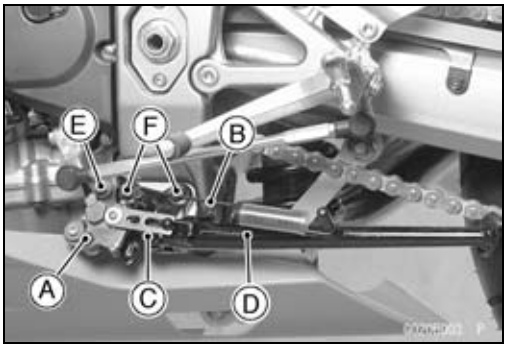

- Raise the rear wheel off the ground with the stand.
- Disconnect the side stand switch lead connectors.
- Remove:
  Side Stand Switch Bolt [A]
  Spring [B]
  Side Stand Bolt [C]
  Side Stand [D]
  Switch Bracket Bolts [E]
  Side Stand Bracket Bolts [F]

Side Stand Installation

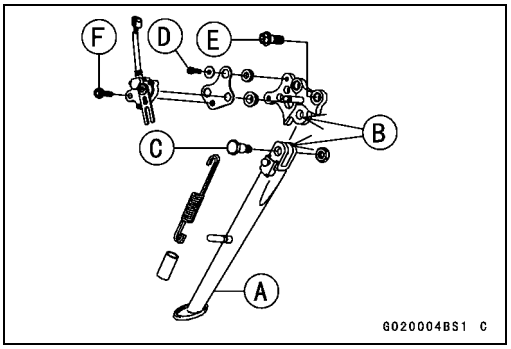

- Apply grease to the sliding area [B] of the side stand [A] and thread of the side stand bolt [C].
- Tighten the bolt and lock them with the nut.

  Torque - Side Stand Bolt [C]: 44 N·m (4.5 kgf·m, 32 ft·lb)
  Side Stand Bracket Bolts [E]: 49 N·m (5.0 kgf·m, 36 ft·lb)

- Hook the spring so that face the long spring end upward.
- Install the switch bracket and side stand switch.

○Apply a non-permanent locking agent to the thread of the switch bracket bolt and switch bolt.

  Torque - Side Stand Switch Bracket Bolt [D]: 3.9 N·m (0.40 kgf·m, 35 in·lb)
  Side Stand Switch Bolt [F]: 8.8 N·m (0.90 kgf·m, 78 in·lb)

Electrical System

Table of Contents

Exploded View 16-4
Wiring Diagram (United States and Canada) 16-10
Wiring Diagram (Australia) 16-12
Wiring Diagram (Other than United States, Canada and Australia) 16-14
Specifications 16-16
Special Tools and Sealant 16-17
Parts Location 16-18
Precautions 16-20
Electrical Wiring 16-22
- Wiring Inspection 16-22

Battery 16-23
- Battery Removal 16-23
- Electrolyte Filling 16-23
- Initial Charge 16-24
- Precautions 16-24
- Interchange 16-25
- Charging Condition Inspection 16-25
- Refreshing Charge 16-26

Charging System 16-28
- Alternator Cover Removal 16-28
- Alternator Cover Installation 16-28
- Stator Coil Removal 16-28
- Stator Coil Installation 16-28
- Alternator Rotor Removal 16-29
- Alternator Rotor Installation 16-29
- Alternator Inspection 16-31
- Regulator/Rectifier Inspection 16-32
- Charging Voltage Inspection 16-35

Ignition System 16-37
- Crankshaft Sensor Removal 16-38
- Crankshaft Sensor Installation 16-39
- Crankshaft Sensor Inspection 16-39
- Crankshaft Sensor Peak Voltage 16-40
- Stick Coil (Ignition Coil together with Spark Plug Cap) Removal 16-40
- Stick Coil (Ignition Coil together with Spark Plug Cap) Installation 16-40
- Stick Coil (Ignition Coil together with Spark Plug Cap) Inspection 16-41
- Stick Coil Primary Peak Voltage 16-41
- Spark Plug Removal 16-42
- Spark Plug Installation 16-42
- Spark Plug Cleaning and Inspection 16-42
- Spark Plug Gap Inspection 16-42
- Camshaft Position Sensor Removal 16-43
- Camshaft Position Sensor Installation 16-43
- Camshaft Position Sensor Inspection 16-43
- Camshaft Position Sensor Peak Voltage Inspection 16-44
- Interlock Operation Inspection 16-45
- IC Igniter Inspection 16-46

Electric Starter System 16-48
- Starter Motor Removal 16-48
- Starter Motor Installation 16-48
- Starter Motor Disassembly 16-48
- Starter Motor Assembly 16-48
- Brush Inspection 16-49
- Commutator Cleaning and Inspection 16-50
- Armature Inspection 16-50
- Brush Lead Inspection 16-50
- Right–hand End Cover Assembly Inspection 16-51
- Starter Relay Inspection 16-51

Lighting System 16-53
- Headlight Beam Horizontal Vertical Adjustment 16-53
- Headlight Bulb Replacement 16-54
- Turn Signal Relay Inspection 16-56

Radiator Fan System 16-58
- Fan System Circuit Inspection 16-58
- Fan Motor Inspection 16-58

Meter 16-60
- Meter Assembly Removal 16-60
- Meter Assembly Disassembly 16-60

Meter, Gauge, Indicator Unit 16-61
- Electronic Combination Meter Assembly Inspection 16-61

Switches and Sensors 16-69
- Brake Light Timing Inspection 16-69
- Brake Light Timing Adjustment 16-69
- Switch Inspection 16-69
- Radiator Fan Switch Inspection 16-70

Water Temperature Sensor Inspection 16-71
Speed Sensor Removal 16-71
Speed Sensor Installation 16-72
Speed Sensor Inspection 16-72
Fuel Reserve Switch Inspection (1) 16-72
Fuel Reserve Switch Inspection (2) 16-73
Junction Box 16-74
Junction Box Fuse Circuit Inspection 16-74
Starter Circuit/Headlight Relay Inspection 16-74
Diode Circuit Inspection 16-75
Fuse 16-77
30 A Main Fuse Removal 16-77
Junction Box Fuse Removal 16-77
15A ECU Fuse Removal 16-77
Fuse Installation 16-77
Fuse Inspection 16-77

Exploded View

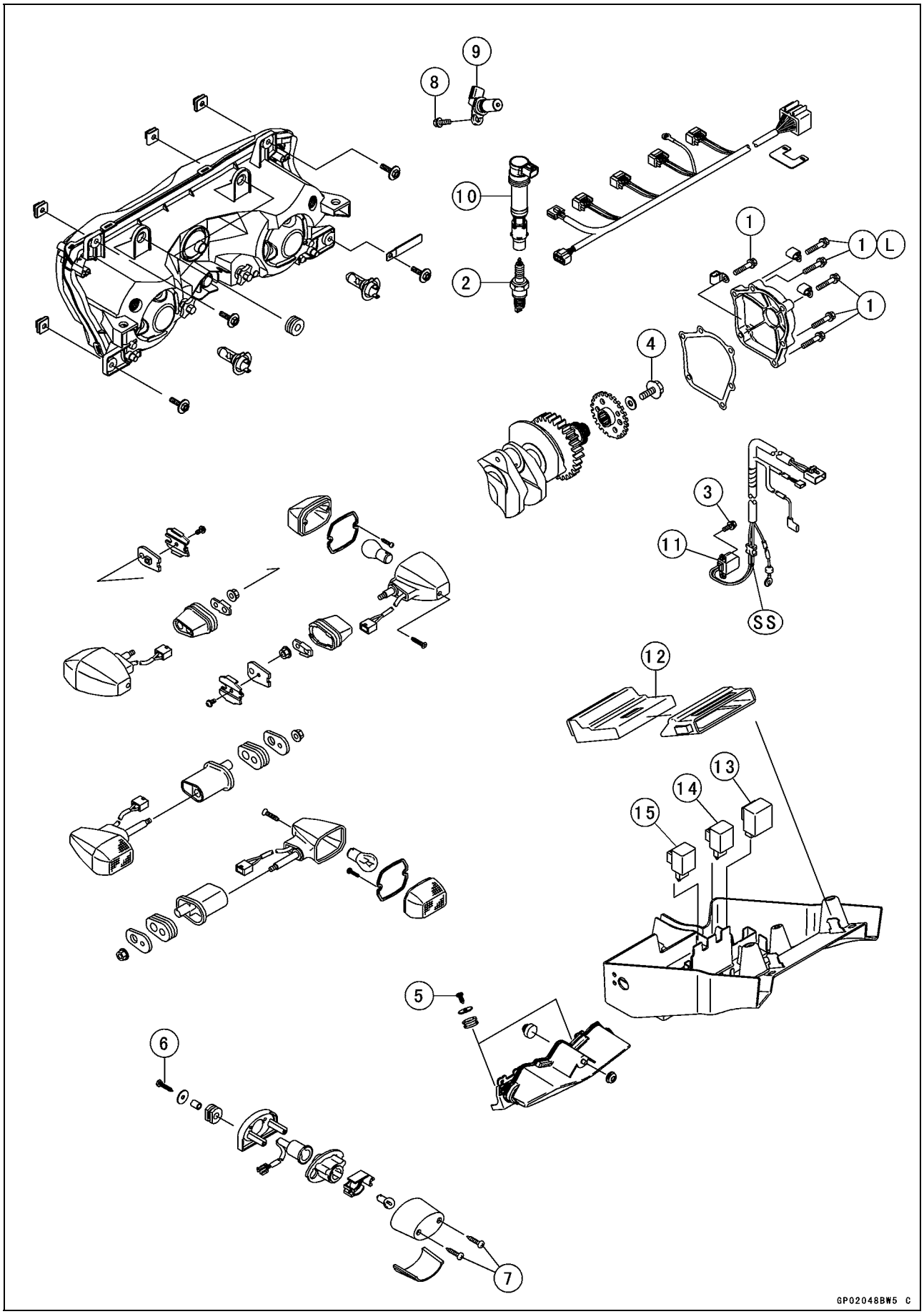

Exploded View

No.	Fastener	Torque			Remarks
		N·m	kgf·m	ft·lb	
1	Crankshaft sensor cover bolts	9.8	1.0	87 in·lb	L (1)
2	Spark plugs	13	1.3	113 in·lb	
3	Crankshaft sensor bolts	5.9	0.60	52 in·lb	
4	Timing rotor bolt	44	4.5	33	
5	Tail/Brake light mounting screws	1.2	0.12	10 in·lb	
6	License light mounting screws	1.2	0.12	10 in·lb	
7	License light assembly screws	1.0	0.10	8.7 in·lb	
8	Camshaft position sensor bolt	12	1.2	106 in·lb	

9. Camshaft Position Sensor
10. Stick Coils
11. Crankshaft Sensor
12. ECU (Electronic Control Unit)
13. Turn Signal Relay
14. Fuel Pump Relay
15. ECU Main Relay

L: Apply a non-permanent locking agent.
SS: Apply silicone sealant.

Exploded View

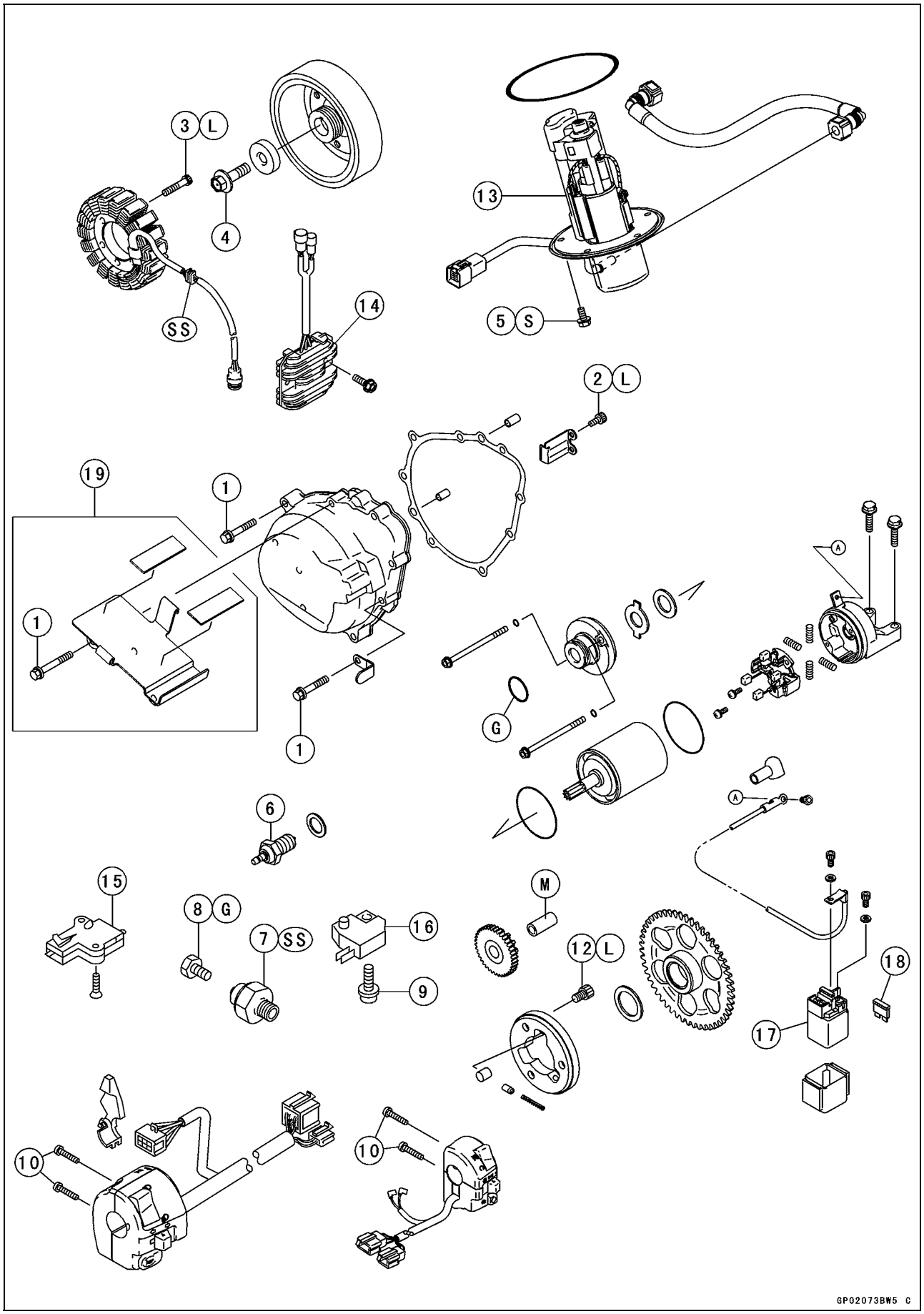

Exploded View

No.	Fastener	Torque			Remarks
		N·m	kgf·m	ft·lb	
1	Alternator cover bolt	12	1.2	104 in·lb	
2	Alternator lead holding plate bolts	6.9	0.70	61 in·lb	L
3	Stator coil bolts	12	1.2	110 in·lb	L
4	Alternator rotor bolt	120	12	87	
5	Fuel pump bolts	9.8	1.0	87 in·lb	S
6	Neutral switch	15	1.5	11	
7	Oil pressure switch	15	1.5	11	SS
8	Oil pressure switch terminal bolt	1.5	0.15	13 in·lb	G
9	Front brake light switch screw	1.2	0.12	10 in·lb	
10	Handlebar switch housing screws	3.5	0.36	31 in·lb	
11	Starter motor mounting bolts	9.8	1.0	87	L
12	Starter motor clutch bolts	33	3.4	24	L

13. Fuel Pump
14. Regulator/Rectifier
15. Starter Lockout Switch
16. Front Brake Light Switch
17. Starter Relay
18. Main Fuse
19. California Model

L: Apply a non-permanent locking agent.
SS: Apply silicone sealant.
M: Apply molybdenum disulfide grease.
G: Apply grease or engine oil.
S: Follow the specified tightening sequence.

Exploded View

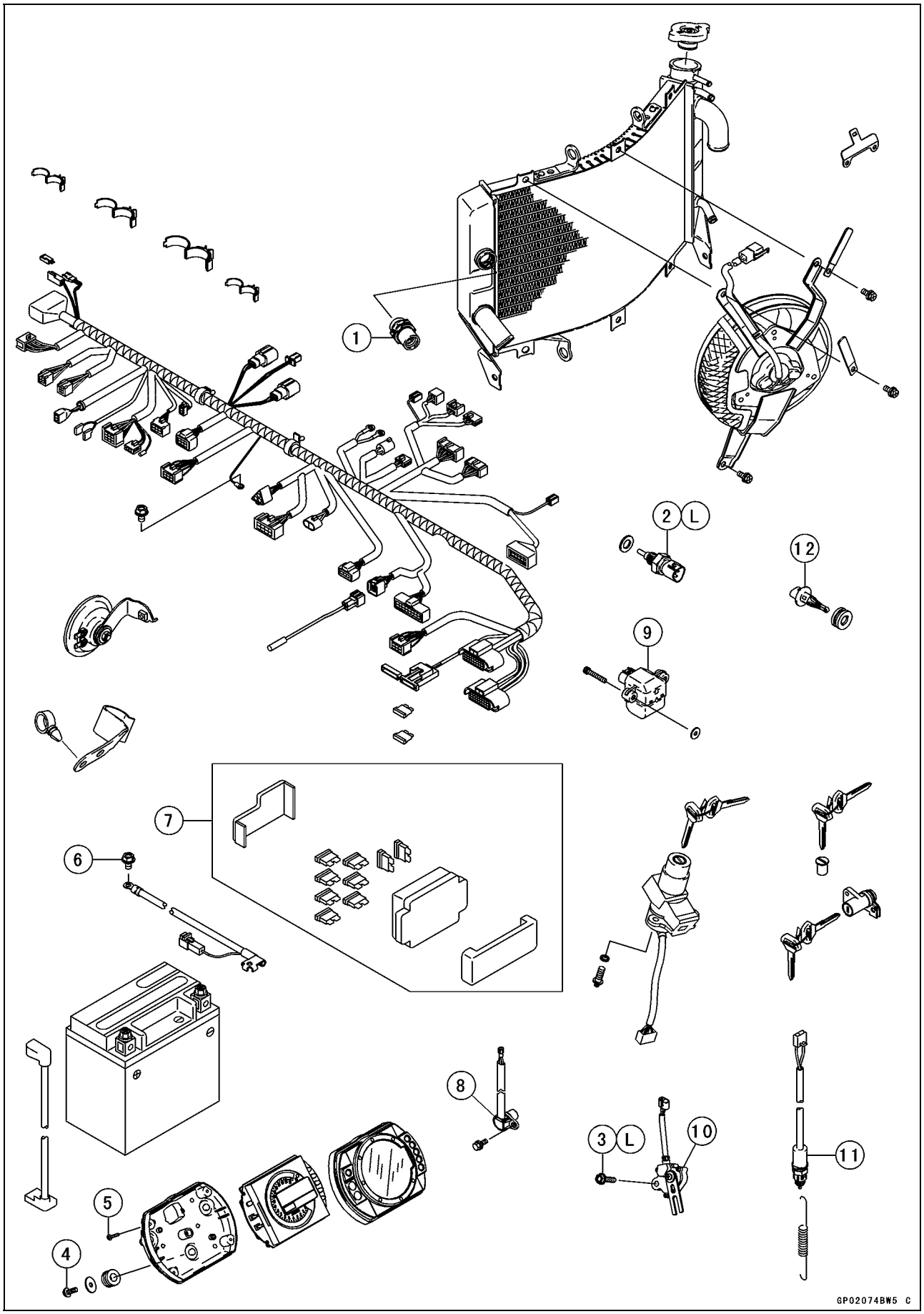

Exploded View

No.	Fastener	Torque			Remarks
		N·m	kgf·m	ft·lb	
1	Fan switch	18	1.8	13	
2	Water temperature sensor	25	2.5	18	L
3	Side Stand Switch Bolt	8.8	0.90	78 in·lb	L
4	Meter screws	1.2	0.12	10 in·lb	
5	Meter assembly screws	1.2	0.12	10 in·lb	
6	Engine Ground Lead Terminal Bolt	9.8	1.0	87 in·lb	

7. Junction Box
8. Speed Sensor
9. Vehicle-down Sensor
10. Side Stand Switch
11. Rear Brake Light Switch
12. Air Temperature Sensor

L: Apply a non-permanent locking agent.

Wiring Diagram (United States and Canada)

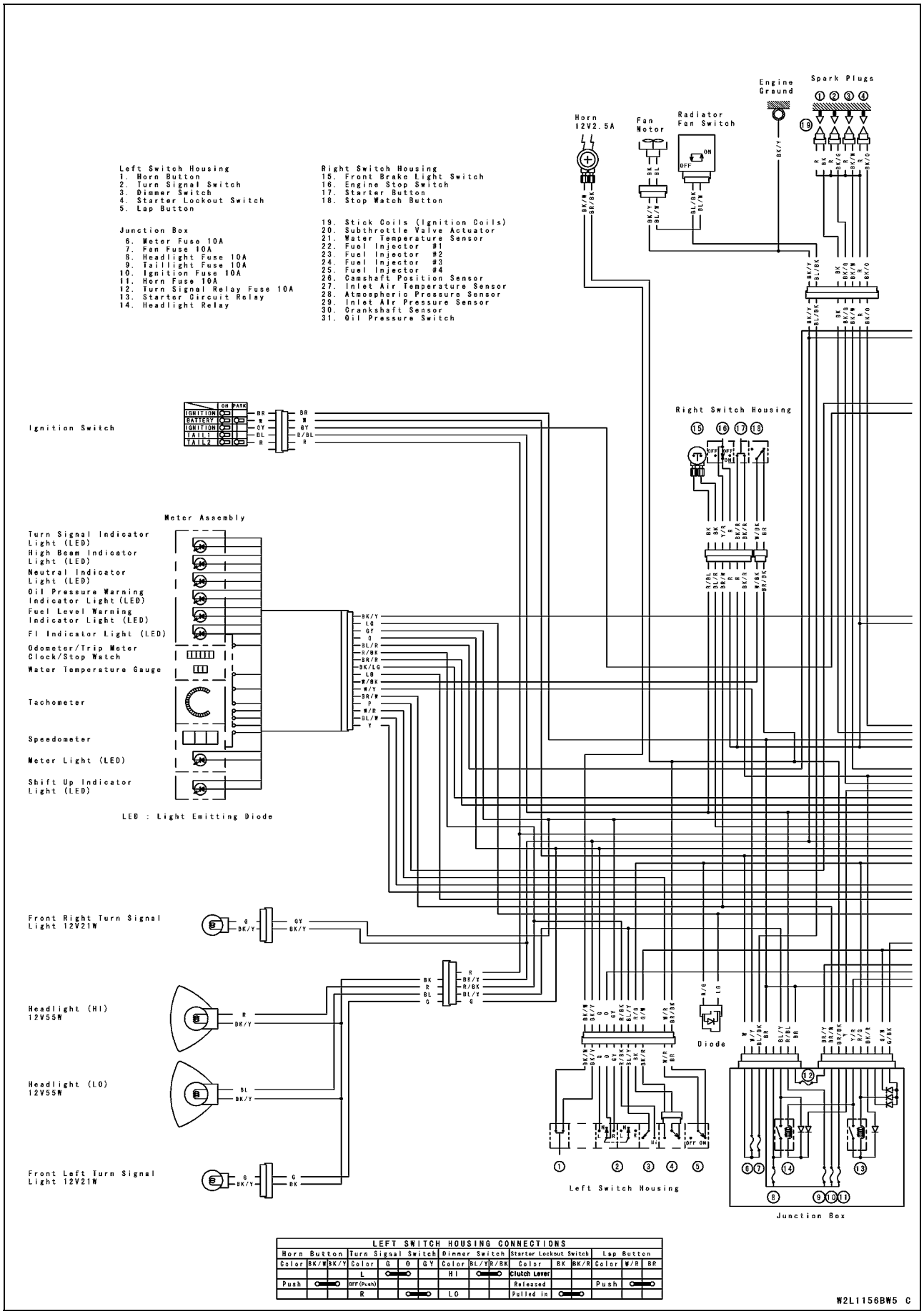

LEFT SWITCH HOUSING CONNECTIONS															
Horn Button			Turn Signal Switch				Dimmer Switch			Starter Lockout Switch			Lap Button		
Color	BK/W	BK/Y	Color	G	O	GY	Color	BL/Y	R/BK	Color	BK	BK/R	Color	W/R	BR
			L				HI			Clutch Lever					
Push			OFF (Push)							Released			Push		
			R				LO			Pulled in					

Wiring Diagram (United States and Canada)

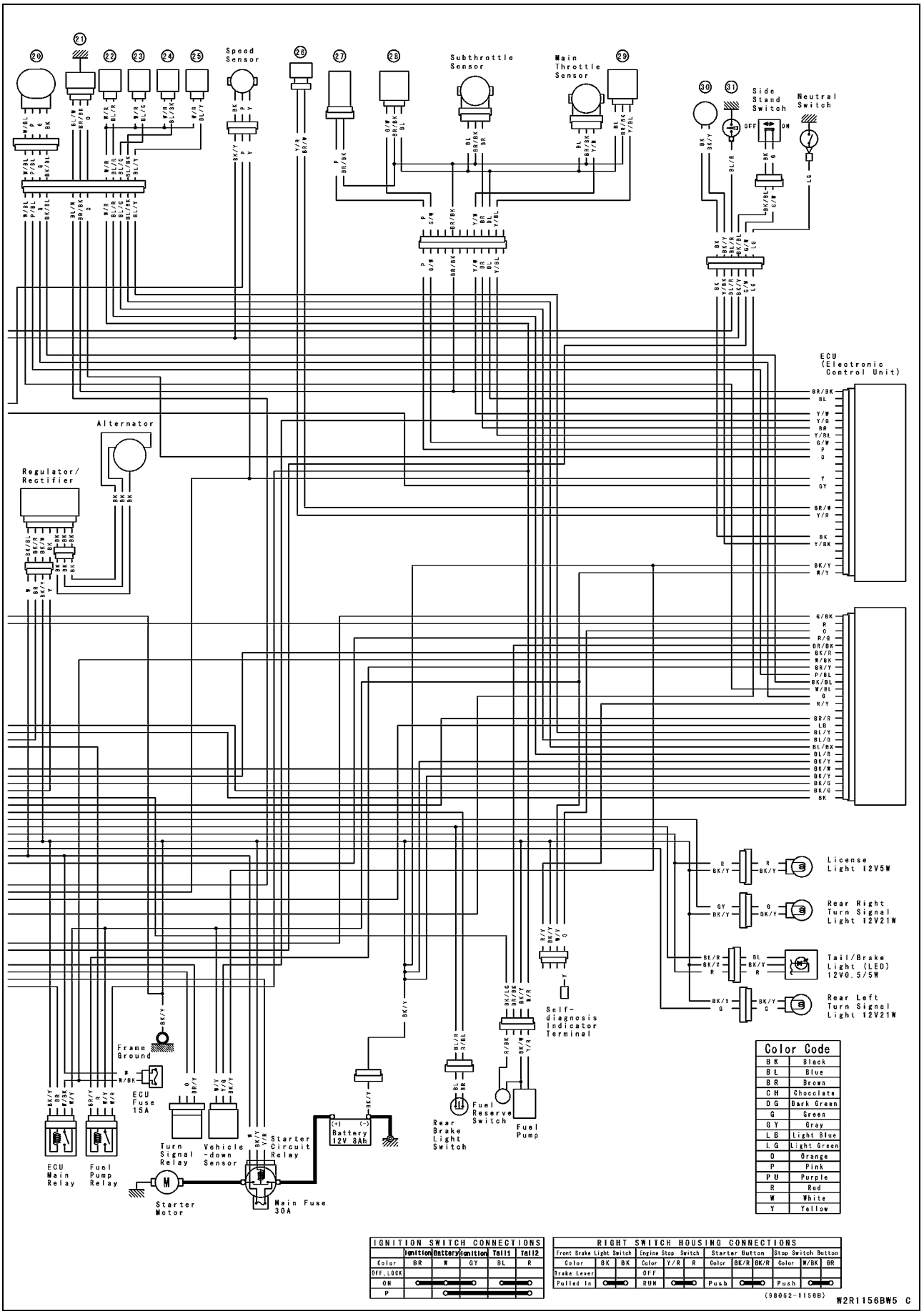

Wiring Diagram (Australia)

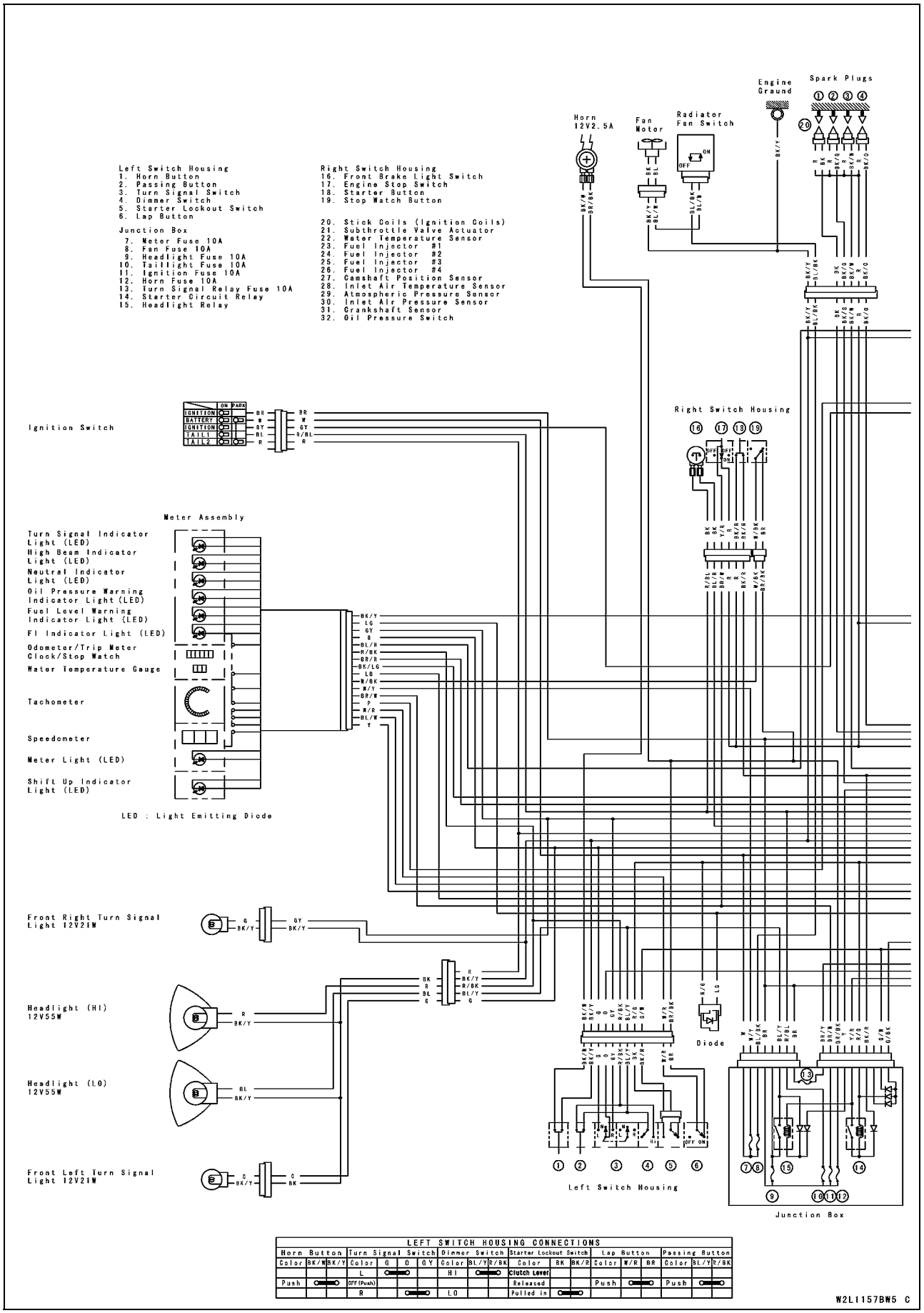

LEFT SWITCH HOUSING CONNECTIONS

Horn Button			Turn Signal Switch				Dimmer Switch			Starter Lockout Switch			Lap Button			Passing Button		
Color	BK/W	BK/Y	Color	G	O	GY	Color	BL/Y	R/BK	Color	BK	BK/R	Color	W/R	BR	Color	BL/Y	R/BK
			L				HI			Clutch Lever								
Push			OFF(Push)							Released			Push			Push		
			R				LO			Pulled in								

Wiring Diagram (Australia)

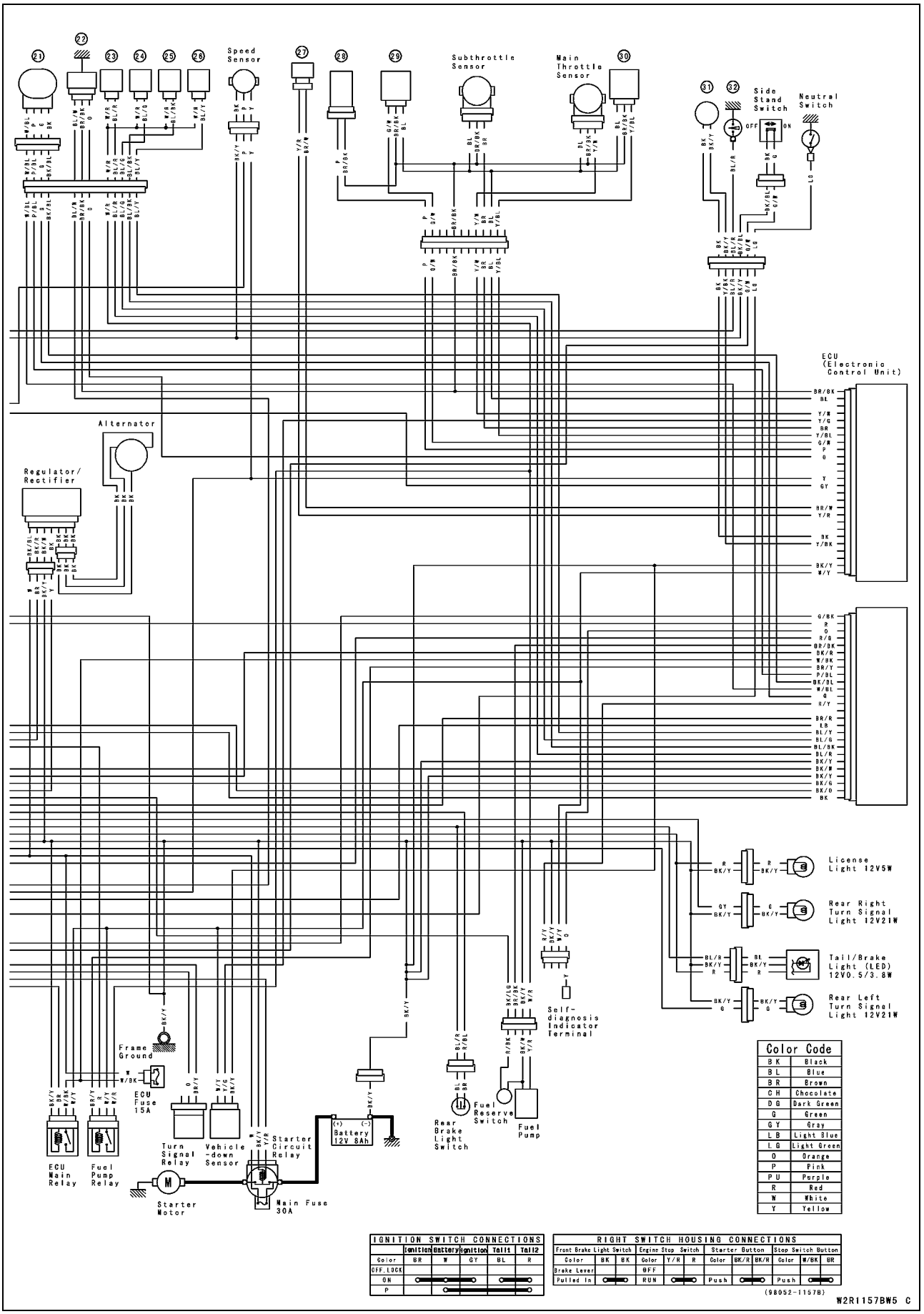

Wiring Diagram (Other than United States, Canada and Australia)

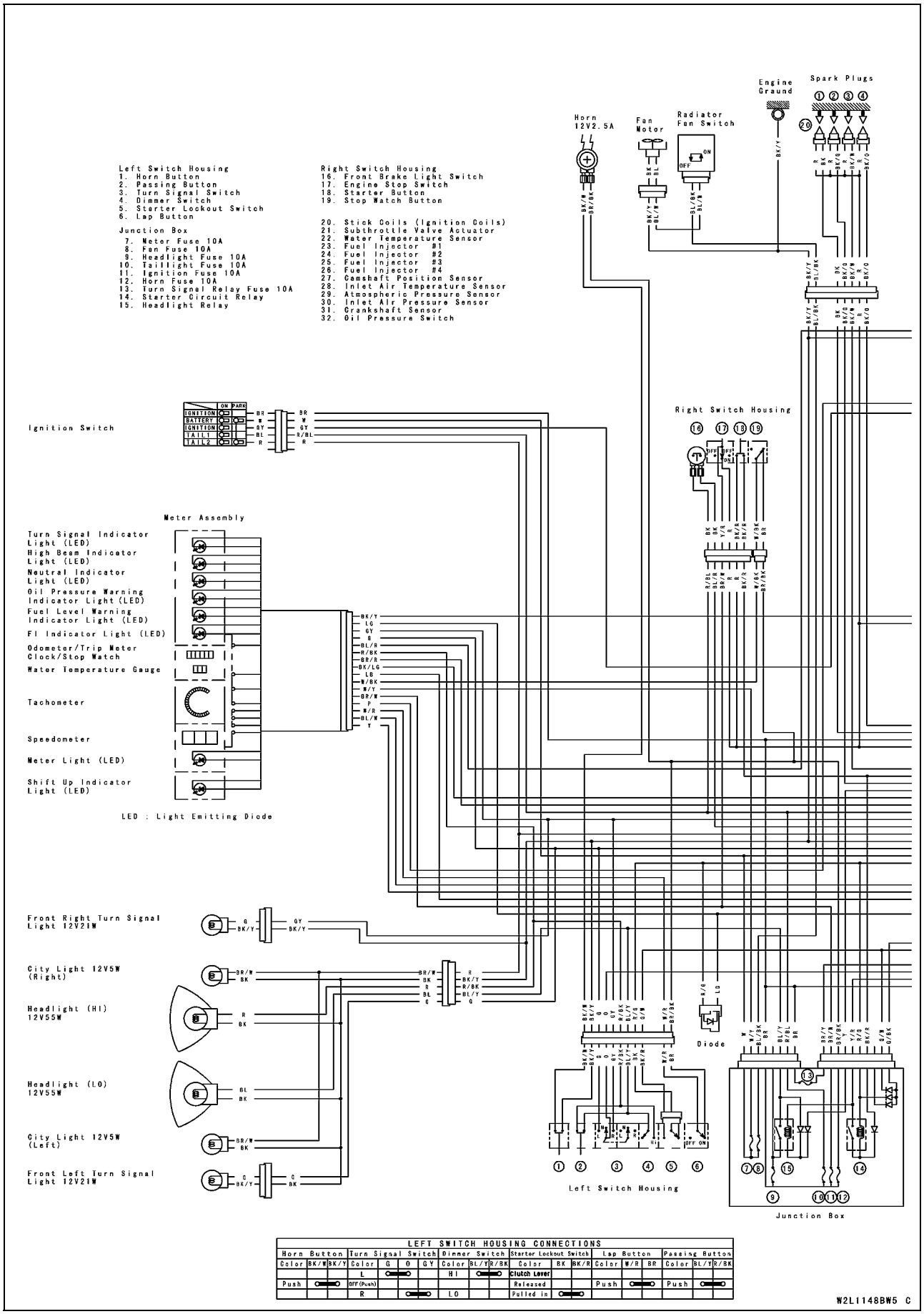

LEFT SWITCH HOUSING CONNECTIONS																			
Horn Button			Turn Signal Switch				Dimmer Switch			Starter Lockout Switch			Lap Button			Passing Button		
Color	BK/W	BK/Y	Color	G	O	GY	Color	BL/Y	R/BK	Color	BK	BK/R	Color	W/R	BR	Color	BL/Y	R/BK
			L				HI			Clutch Lever								
Push			OFF(Push)							Released			Push			Push		
			R				LO			Pulled in								

Wiring Diagram (Other than United States, Canada and Australia)

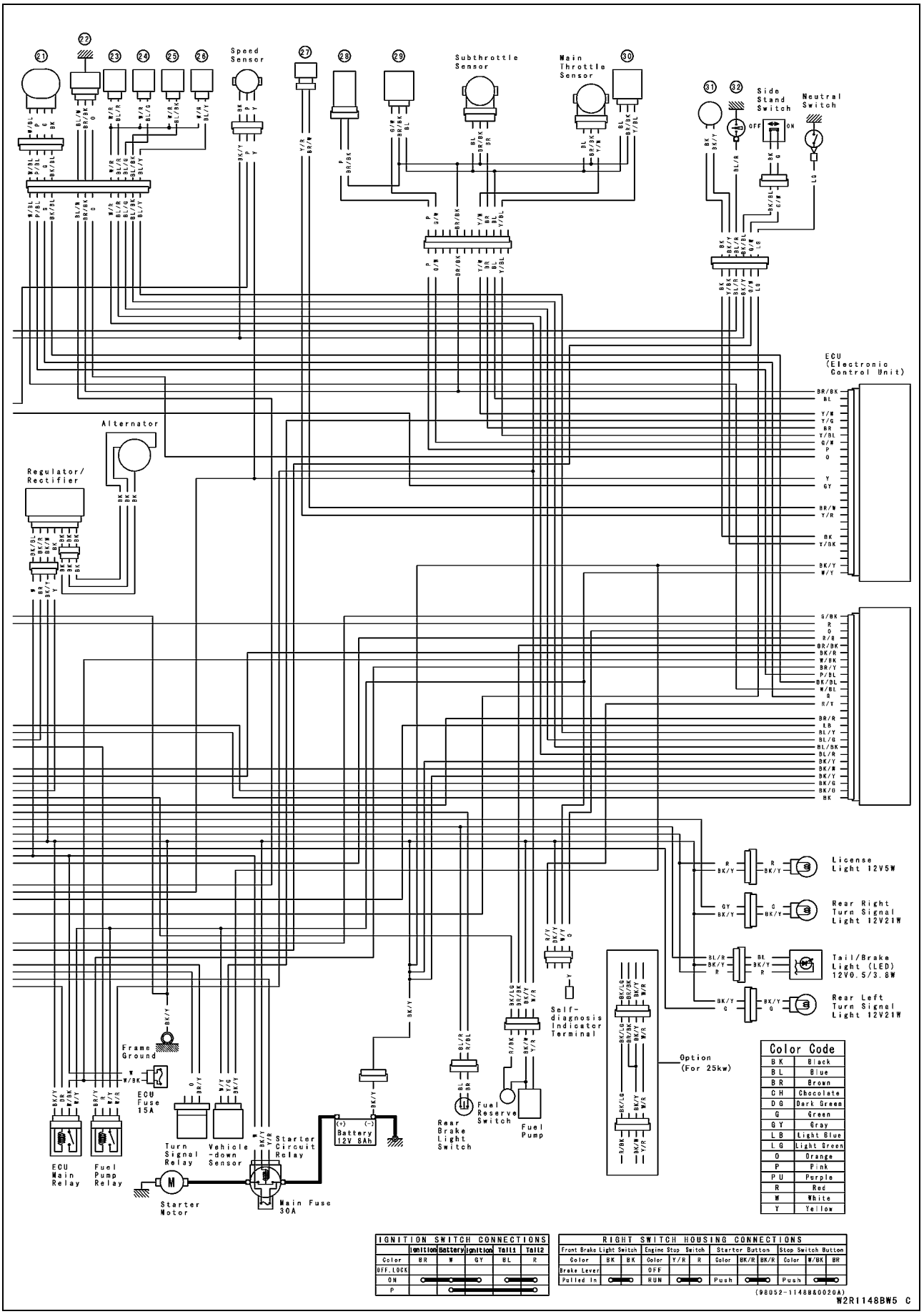

Specifications

Item	Standard
Battery:	
Type	Sealed Battery
Capacity	12 V 8 Ah
Voltage	12.6 V or more
Charging System:	
Type	Three–phase AC
Alternator output voltage	42.4 ~ 63.6 V @4 000 r/min (rpm)
Stator coil resistance	0.3 ~ 0.4 Ω
Charging voltage (regulator/rectifier output voltage)	14.2 ~ 15.2 V
Ignition System:	
Crankshaft sensor resistance	460 ~ 470 Ω
Crankshaft sensor peak voltage	2.0 V or more
Camshaft Position Sensor Resistance	490 ~ 590 Ω
Camshaft Position Sensor Peak Voltage	0.135 V or more
Interlock Operation Voltage	4 V or more
Stick coil:	
Primary winding resistance	1.2 ~ 1.6 Ω
Secondary winding resistance	8.5 ~ 11.5 kΩ
Primary peak voltage	100 V or more
Electric Starter System:	
Starter motor:	
Brush length	7 mm (0.28 in.), Service Limit 3.5 mm (0.14 in.)
Commutator diameter	24 mm (0.94 in.), Service Limit 23 mm (0.91 in.)
Switch and Sensor:	
Rear brake light switch timing	ON after about 10 mm (0.39 in) pedal travel
Engine oil pressure switch connections	When engine is stopped: ON When engine is running: OFF
Fan switch resistance:	
Rising temperature	From OFF to ON @ 93 ~ 103°C (199 ~ 217°F)
Falling temperature	Fan stops with the temperature 3 ~ 8°C (38 ~ 46°F) lower than the operation temperature range. ON: Less than 0.5 Ω OFF: More than 10 MΩ
Water temperature sensor resistance	in the text

Special Tools and Sealant

Flywheel Holder:
57001–1313

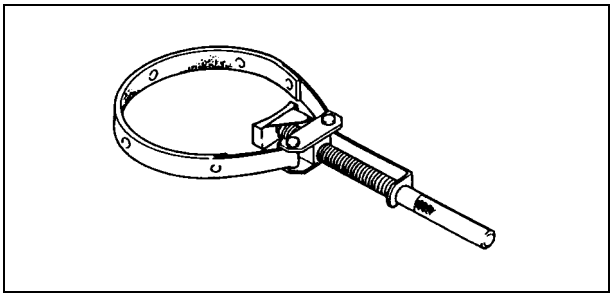

Hand Tester:
57001–1394

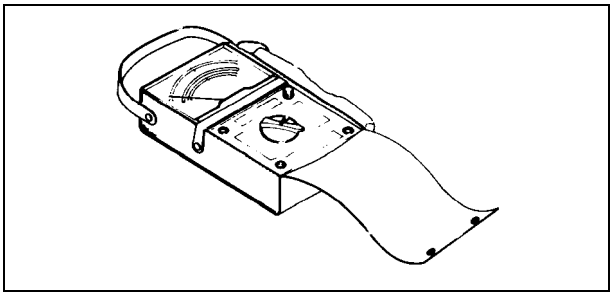

Flywheel Puller Assembly:
57001–1405

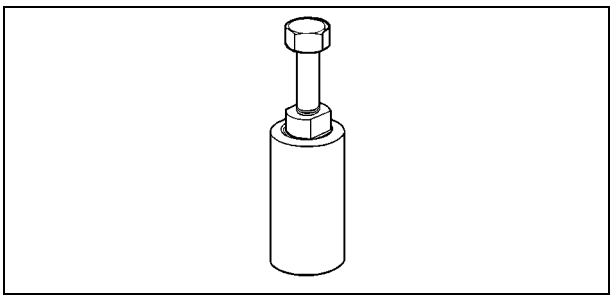

Lead Wire – Peak Voltage Adapter:
57001–1449

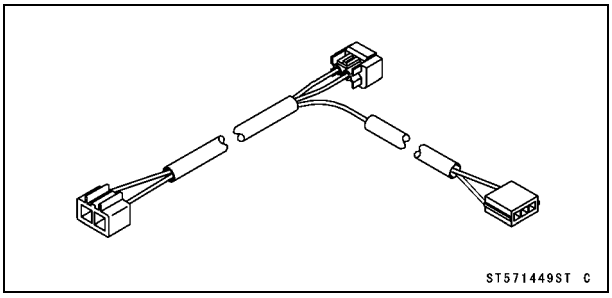

Needle Adapter Set:
57001–1457

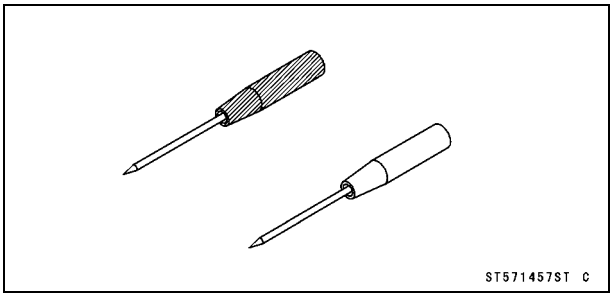

Harness Adapter:
57001–1542

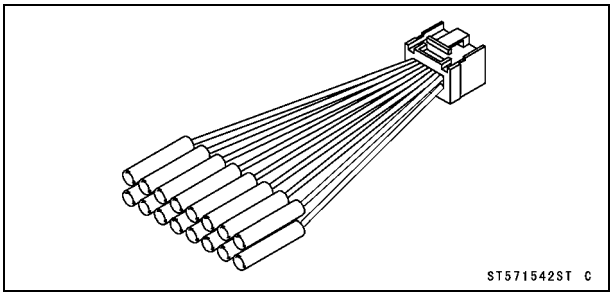

Kawasaki Bond (Silicone sealant) :
56019–120

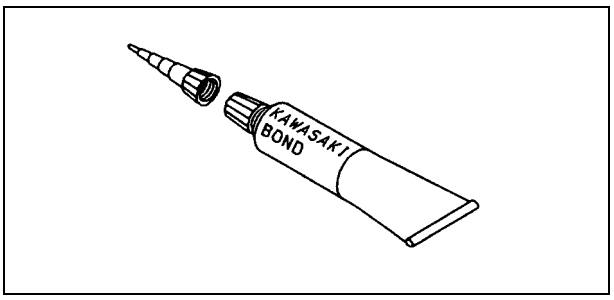

Parts Location

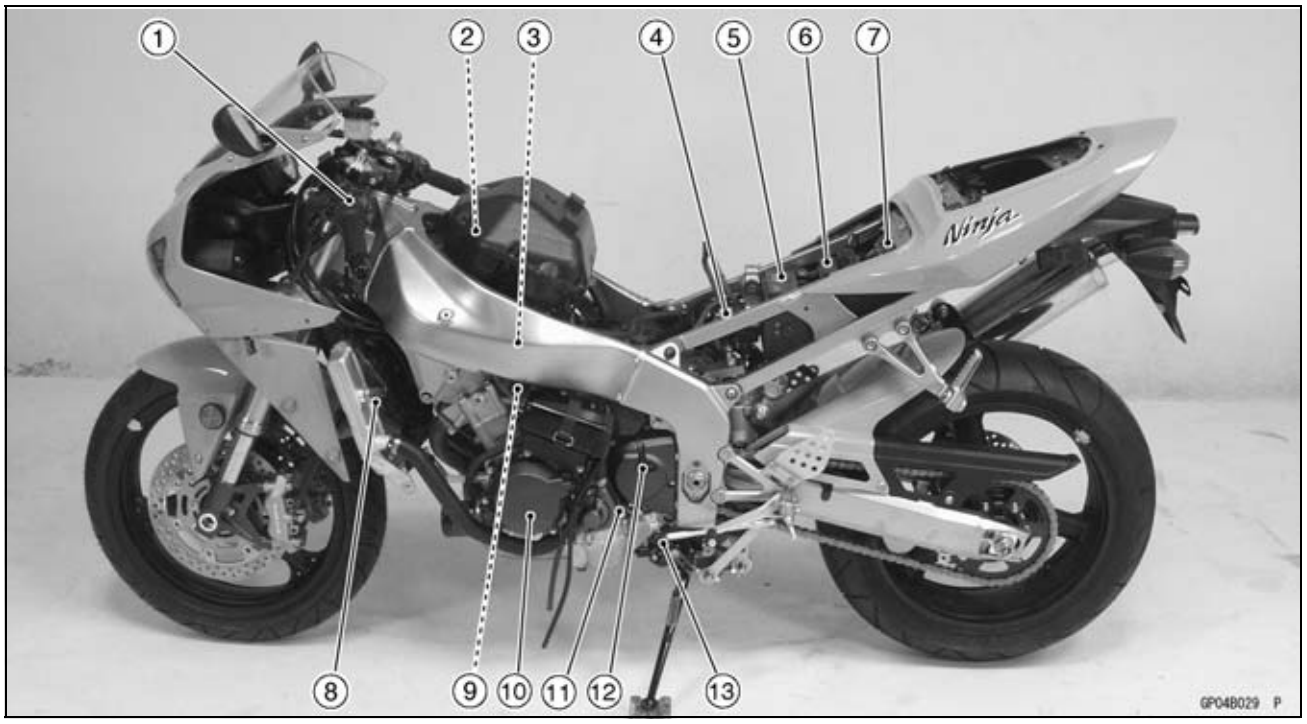

1. Starter Lockout Switch
2. Stick Coils
3. Water Temperature Sensor
4. Vehicle-down Sensor
5. Battery
6. Junction Box
7. ECU (Electronic Control Unit)
8. Radiator Fan Switch
9. Starter Motor
10. Alternator
11. Neutral Switch
12. Speed Sensor
13. Side Stand Switch

Parts Location

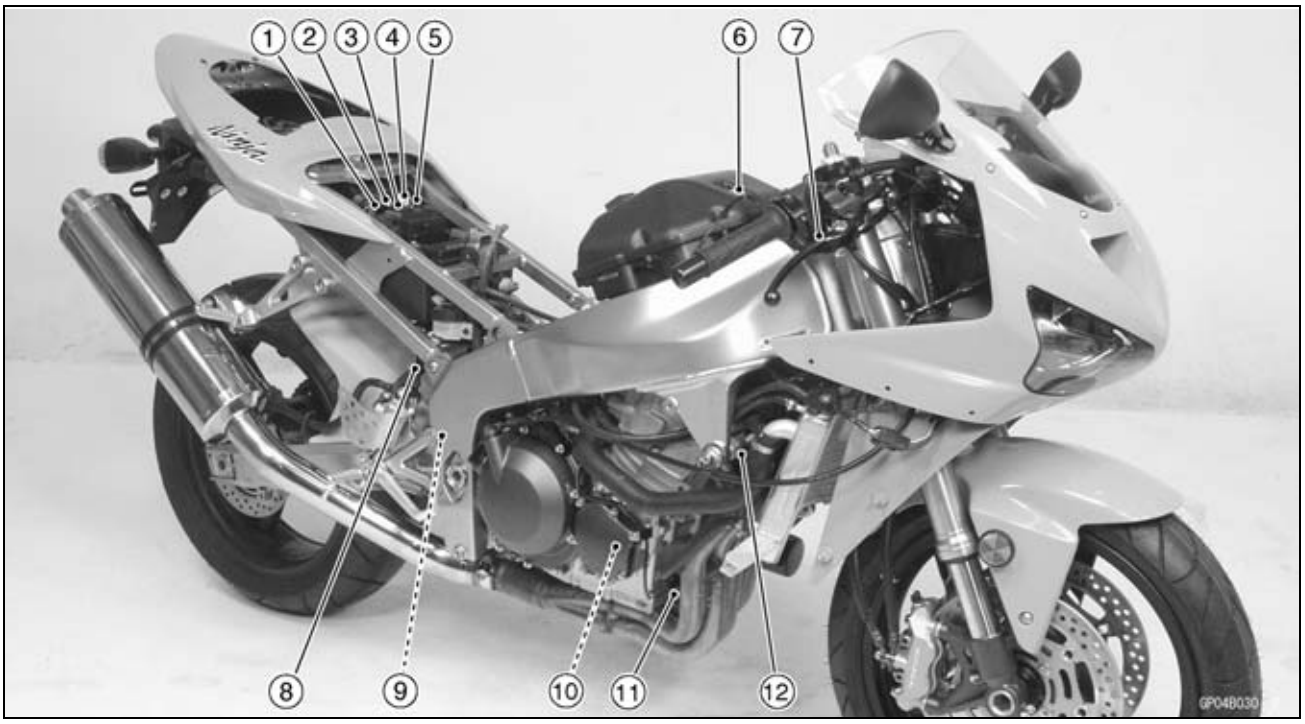

1. Starter Relay and Main Fuse
2. Turn Signal Relay
3. Fuel Pump Relay
4. ECU Fuse
5. ECU Main Relay
6. Inlet Air Pressure Sensor
7. Front Brake Light Switch
8. Rear Brake Light Switch
9. Regulator/Rectifire
10. Crankshaft Sensor
11. Oil Pressure Switch
12. Camshaft Position Sensor

Precautions

There are a number of important precautions that are musts when servicing electrical systems. Learn and observe all the rules below.

○Do not reverse the battery lead connections. This will burn out the diodes on the electrical parts.

○Always check battery condition before condemning other parts of an electrical system. A fully charged battery is a must for conducting accurate electrical system tests.

○The electrical parts should never be struck sharply, as with a hammer, or allowed to fall on a hard surface. Such a shock to the parts can damage them.

○To prevent damage to electrical parts, do not disconnect the battery leads or any other electrical connections when the ignition switch is on, or while the engine is running.

○Because of the large amount of current, never keep the starter button pushed when the starter motor will not turn over, or the current may burn out the starter motor windings.

○Do not use a meter illumination bulb rated for other than voltage or wattage specified in the wiring diagram, as the meter or gauge panel could be warped by excessive heat radiated from the bulb.

○Take care not to short the leads that are directly connected to the battery positive (+) terminal to the chassis ground.

○Troubles may involve one or in some cases all items. Never replace a defective part without determining what CAUSED the failure. If the failure was caused by some other item or items, they must be repaired or replaced, or the new replacement will soon fail again.

○Make sure all connectors in the circuit are clean and tight, and examine wires for signs of burning, fraying, etc. Poor wires and bad connections will affect electrical system operation.

○Measure coil and winding resistance when the part is cold (at room temperature).

○Color Codes:

BK	Black	G	Green	P	Pink
BL	Blue	GY	Gray	PU	Purple
BR	Brown	LB	Light blue	R	Red
CH	Chocolate	LG	Light green	W	White
DG	Dark green	O	Orange	Y	Yellow

○Electrical Connectors
Female Connectors [A]

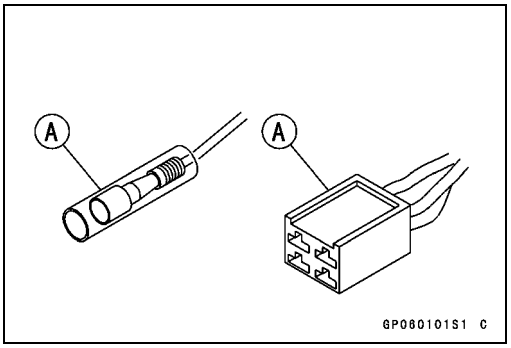

Precautions

Male Connectors [B]

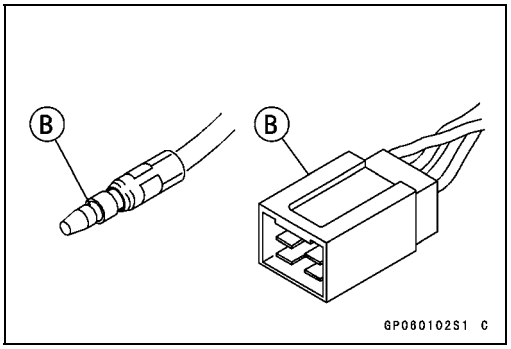

Electrical Wiring

Wiring Inspection

- Visually inspect the wiring for signs of burning, fraying, etc.

★If any wiring is poor, replace the damaged wiring.

- Pull each connector [A] apart and inspect it for corrosion, dirt, and damage.

★If the connector is corroded or dirty, clean it carefully. If it is damaged, replace it.

- Check the wiring for continuity.

○Use the wiring diagram to find the ends of the lead which is suspected of being a problem.

○Connect the hand tester between the ends of the leads.

Special Tool - Hand Tester: 57001–1394

○Set the tester to the × 1 Ω range, and read the tester.

★If the tester does not read 0 Ω, the lead is defective. Replace the lead or the wiring harness [B] if necessary.

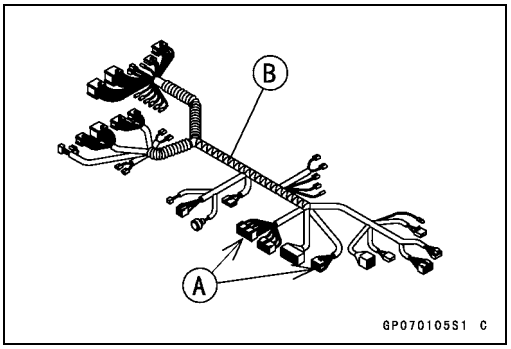

Battery

Battery Removal

- Remove the seats (see Frame chapter).
- Disconnect the negative (–) lead [A] and then positive (+) lead [B].

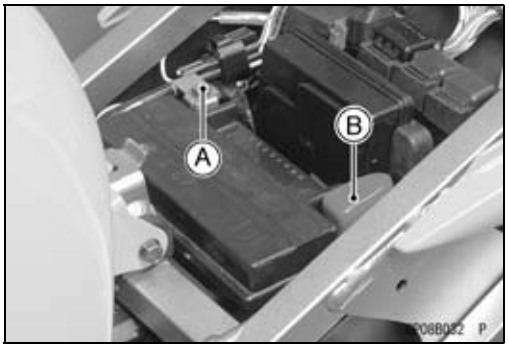

CAUTION
Be sure to disconnect the negative (–) lead first.

- Remove the battery.

Electrolyte Filling

CAUTION
Do not remove the aluminum seal sheet [A] sealing the filler ports [B] until just before use. **Be sure to use the dedicated electrolyte container for correct electrolyte volume.**

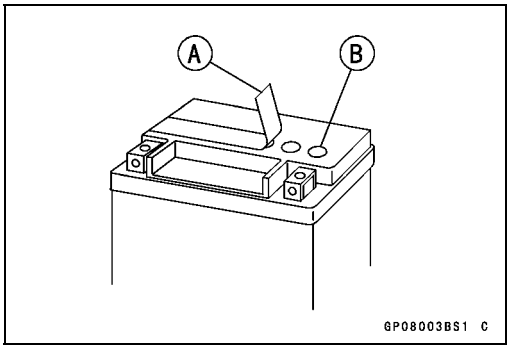

- Check to see that there is no peeling, tears or holes in the seal sheet on the top of the battery.
- Place the battery on a level surface.
- Remove the seal sheet.

NOTE

○*A battery whose seal sheet has any peeling, tears, or holes, requires a refreshing charge (initial charge).*

- Take the electrolyte container out of the vinyl bag.
- Detach the seal caps [A] from the container.

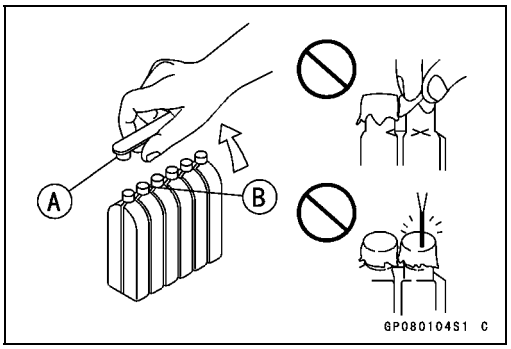

NOTE

○*Do not discard the seal caps because it is used as the battery plugs later.*

○*Do not peel back or pierce the seals [B] on the container.*

- Place the electrolyte container upside down aligning six seals with the six battery filler ports.
- Push the container down strongly enough to break the seals. Now the electrolyte should start to flow into the battery.

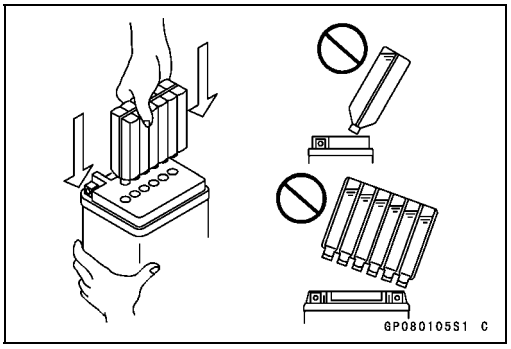

NOTE

○*Do not tilt the container as the electrolyte flow may be interrupted.*

Battery

- Make sure air bubbles [A] are coming up from all six filler ports.

○Leave the container this way for 5 minutes or longer.

NOTE

○*If no air bubbles are coming up from a filler port, tap [B] the bottom of the container two or three times. Never remove the container from the battery.*

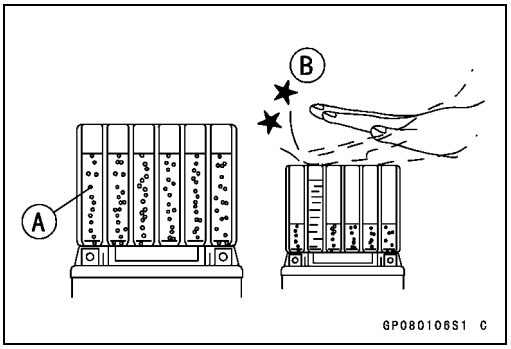

CAUTION
Fill the electrolyte into battery until the container is completely emptied.

- Be certain that all the electrolyte has flowed out.
- Tap the bottom the same way as above if there is any electrolyte left in the container.
- Now pull the container gently out of the battery.
- Let the battery sit for **20** minutes. During this time, the electrolyte permeates the special separators and the gas generated by chemical reaction is released.
- Fit the seal caps [A] tightly into the filler ports until the seal cap is at the same level as the top of the battery.

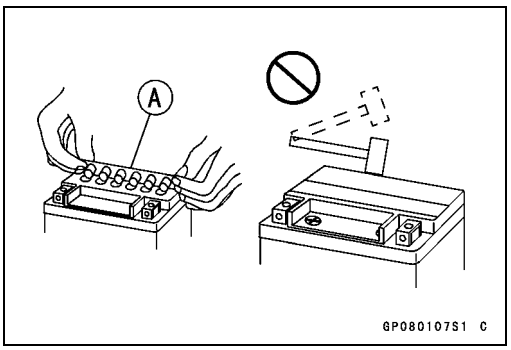

NOTE

○*Do not hammer. Press down evenly with both hands.*

CAUTION
Once you install the seal caps after filling the battery, never remove it, nor add any water or electrolyte.

Initial Charge

While a sealed battery can be used after only filling with electrolyte, a battery may not be able to sufficiently move a starter motor to start an engine in the cases shown in the table below, where an initial charge is required before use. However, if a battery shows a terminal voltage of higher than 12.6 V after 10 minutes of filling (Note 1), no initial charge is necessary.

Condition requiring initial charge	Charging method
At low temperatures (lower than 0°C)	0.9 A × 2 ~ 3 hours
Battery has been stored in high temperature and humidity.	
Seal has been removed, or broken - peeling, tear or hole.	0.9 A × 15 ~ 20 hours
Battery as old as 2 years or more after manufacture. Battery manufacturing date is printed on battery top. Example) 12 (Day) 10 (Month) 93 (Year) T1 (Mfg. location)	

Note 1 : Terminal voltage – To measure battery terminal voltage, use a digital voltmeter.

Precautions

1) No need of topping-up

No topping-up is necessary in this battery until it ends its life under normal use. Forcibly prying off the seal cap to add water is very dangerous. Never do that.

2) Refreshing charge

If an engine will not start, a horn sounds weak, or lamps are dim, it indicates the battery has been discharged. Give refresh charge for 5 to 10 hours with charge current shown in the specification (see the this chapter).

Battery

When a fast charge is inevitably required, do it following precisely the maximum charge current and time conditions indicated on the battery.

CAUTION

This battery is designed to sustain no unusual deterioration if refresh-charged according to the method specified above. However, the battery's performance may be reduced noticeably if charged under conditions other than given above.
Never remove the seal cap during refresh charge.
If by chance an excessive amount of gas is generated due to overcharging, the safety valve operates to keep the battery safe.

3) When you do not use the motorcycle for months
   Give a refresh charge before you store the motorcycle and store it with the negative lead removed. Give a refresh charge once a month during storage.
4) Battery life
   If the battery will not start the engine even after several refresh charges, the battery has exceeded its useful life. Replace it. (Provided, however, the vehicle's starting system has no problem.)

⚠ WARNING

Keep the battery away from sparks and open flames during charging, since the battery gives off an explosive gas mixture of hydrogen and oxygen. When using a battery charger, connect the battery to the charger before turning on the charger. This procedure prevents sparks at the battery terminals which could ignite any battery gases.
No fire should be drawn near the battery, or no terminals should have the tightening loosened.
The electrolyte contains sulfuric acid. Be careful not to have it touch your skin or eyes. If touched, wash it off with liberal amount of water. Get medical attention if severe.

Interchange

A sealed battery can fully display its performance only when combined with a proper vehicle electric system. Therefore, replace a sealed battery only on a motorcycle which was originally equipped with a sealed battery.

Be careful, if a sealed battery is installed on a motorcycle which had an ordinary battery as original equipment, the sealed battery's life will be shortened.

Charging Condition Inspection

Battery charging condition can be checked by measuring battery terminal voltage.

- Remove the seats (see Frame chapter).
- Disconnect the battery leads.

CAUTION

Be sure to disconnect the negative (–) lead first.

- Measure the battery terminal voltage.

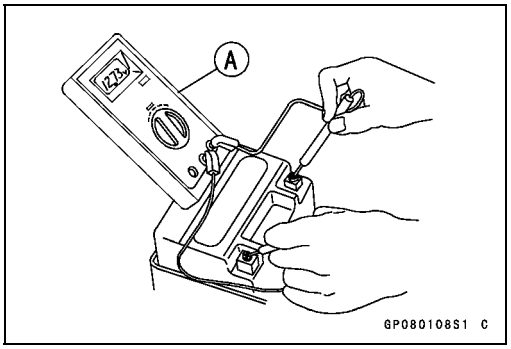

NOTE

○*Measure with a digital voltmeter [A] which can be read to one decimal place voltage.*

★If the reading is below the specified, refreshing charge is required.

Battery Terminal Voltage
Standard: 12.6 V or more

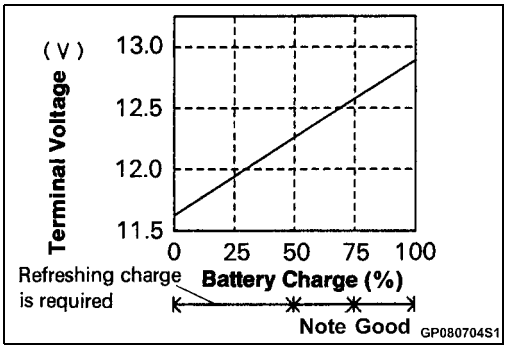

Refreshing Charge

- Remove the battery [A].
- Do refresh-charge by following method according to the battery terminal voltage.

⚠ WARNING

This battery is sealed type. Never remove seal caps [B] even at charging. Never add water. Charge with current and time as stated below.

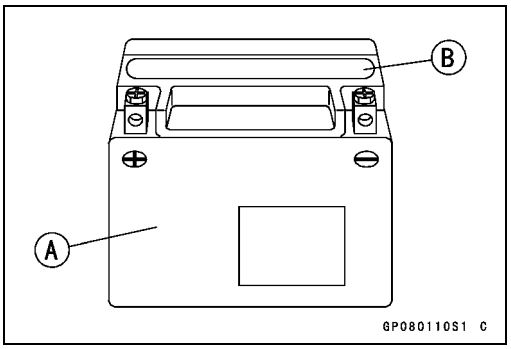

Terminal Voltage: 11.5 ~ less than 12.6 V
Standard Charge
0.9 A × 5 ~ 10 h (see following chart)
Quick Charge
4.0 A × 1.0 h

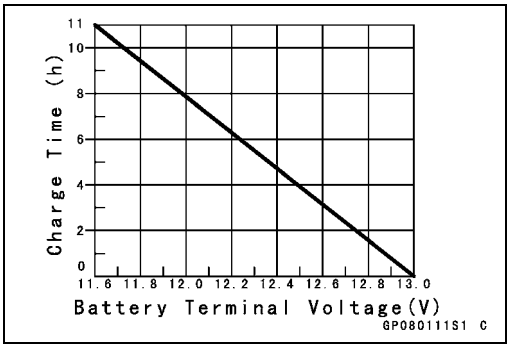

CAUTION

If possible, do not quick charge. If the quick charge is done due to unavoidable circumstances, do standard charge later on.

Terminal Voltage : less than 11.5 V
Charging Method : 0.9 A × 20 h

NOTE

○*If the current does not flow when charging, raise the voltage initially (25 V as maximum), and let down the voltage to charge when the current starts to flow as a yardstick. If ammeter shows no change in current after 5 minutes, you need a new battery. The current, if it can flow into the battery, tends to become excessive. Adjust the voltage as often as possible to keep the current at standard value (0.9 A).*

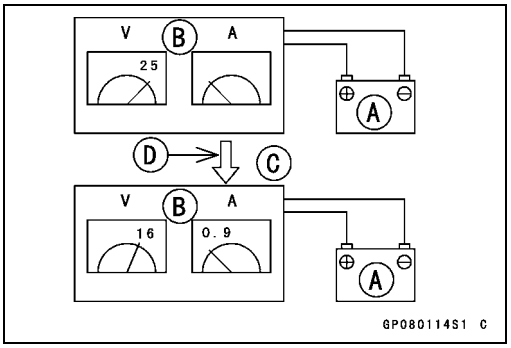

Battery [A]
Battery Charger [B]
Standard Value [C]
Current starts to flow [D]

Battery

- Determine battery condition after refreshing charge.

○Determine the condition of the battery 30 minutes after completion of the charge by measuring the terminal voltage according to the table below.

Criteria	Judgement
12.6 V or higher	Good
12.0 ~ 12.6 V or lower	Charge insufficient → Recharge
12.0 V or lower	Unserviceable → Replace

Alternator Cover Removal

- Remove:
  Left Lower Fairing (see Frame chapter)
  Fuel Tank (see Fuel System (DFI) chapter)
  Coolant Reserve Tank [A]
  Alternator Lead Connector [B]
- Place a suitable container under the alternator cover [C], and remove the cover.

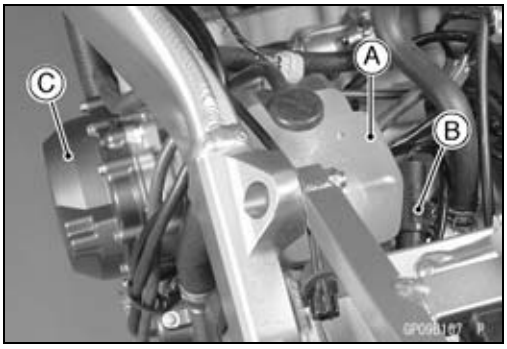

Alternator Cover Installation

- Apply silicone sealant to the alternator lead grommet and crankcase halves mating surface [A] on the front and rear sides of the cover mount.

  Sealant - Kawasaki Bond (Silicone Sealant): 56019–120
- Check that knock pins [B] are in place on the crankcase.
- Install a new gasket and the alternator cover.
- Tighten:

  Torque - Alternator Cover Bolts: 12 N·m (1.2 kgf·m, 104 in·lb)

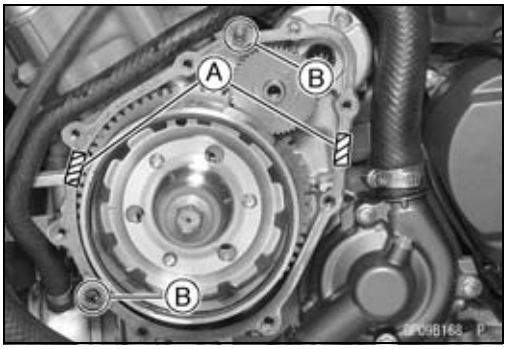

Stator Coil Removal

- Remove:
  Alternator Cover (see Alternator Cover Removal)
  Holding Plate Bolts [A] and Plate
  Alternator Lead Grommet [B]
  Stator Coil Bolts [C]
- Remove the stator coil [D] from the alternator cover.

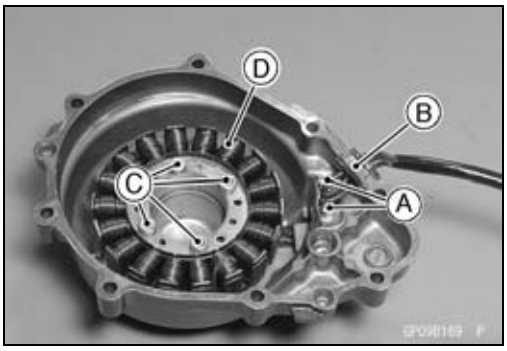

Stator Coil Installation

- Apply a non-permanent locking agent to the threads of the stator coil bolts and tighten them.

  Torque - Stator Coil Bolts: 12 N·m (1.2 kgf·m, 110 in·lb)
- Apply silicone sealant to the circumference of the alternator lead grommet, and fit the grommet into the notch of the cover securely.

  Sealant - Kawasaki Bond (Silicone Sealant): 92104–1063
- Secure the alternator lead with a holding plate, and apply a non-permanent locking agent to the threads of the plate bolts and tighten them.

  Torque - Alternator Lead Holding Plate Bolts: 6.9 N·m (0.70 kgf·m, 61 in·lb)
- Install the alternator cover (see Alternator Cover Installation).

Charging System

Alternator Rotor Removal

- Remove:
  Alternator Cover (see Alternator Cover Removal)
  Starter Idle Gear and Shaft
- Wipe oil off the outer circumference of the rotor.
- Hold the alternator rotor steady with the flywheel holder [A], and remove the rotor bolt [B].

  Special Tool - Flywheel Holder: 57001–1313

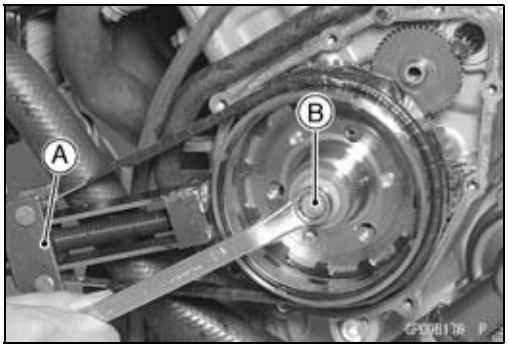

- Using the flywheel puller [A], remove the alternator rotor from the crankshaft.

  Special Tool - Flywheel Puller, M38 × 1.5: 57001–1405

CAUTION
Do not attempt to strike the alternator rotor itself. Striking the rotor can cause the magnets to lose their magnetism.

Alternator Rotor Installation

- Using a cleaning fluid, clean off any oil or dirt on the following portions and dry them with a clean cloth.
  [A] Crankshaft Tapered Portion
  [B] Alternator Rotor Tapered Portion
- Apply a thin coat of molybdenum disulfide grease to the crankshaft [C].

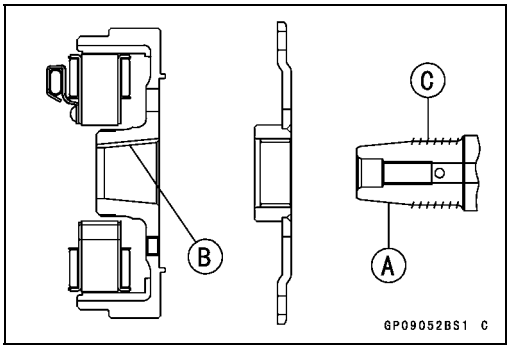

- Install the starter gear [A], and washer [B].
- Again, clean the crankshaft tapered portion [C] and dry there.

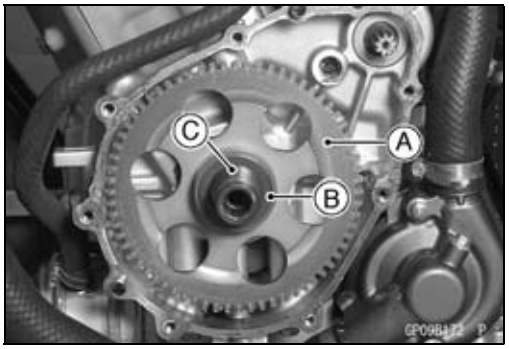

- Install the alternator rotor [A] while turning [B] it counterclockwise.

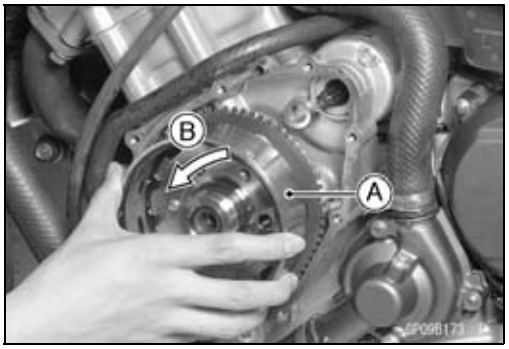

- Install the washer [A].

NOTE

○*Confirm the alternator rotor fit or not to the crankshaft before tightening it with specified torque.*

○*Alternator bolt fastening process has two steps. If both steps are not carried out, the alternator bolt could loosen and the engine could be damaged. Carry out following two steps without fail.*

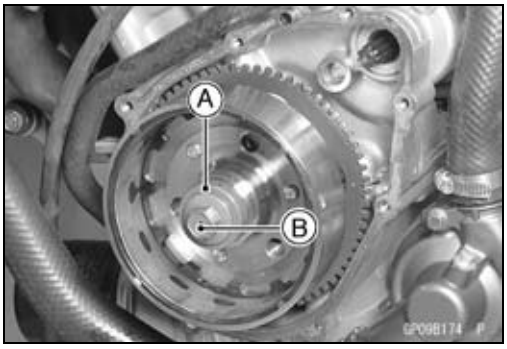

Step 1:

- Install the rotor and tighten it with 70 N·m (7 kgf·m, 52 ft·lb) of torque.
- Remove the washer and rotor bolt.
- Check the tightening torque with flywheel puller [C].

★If the rotor is not pulled out with 40 N·m (4.1 kgf·m, 30 ft·lb) of drawing torque, it is installed correctly.

★If the rotor is pulled out with under 40 N·m (4.1 kgf·m, 30 ft·lb) of drawing torque, clean off any oil dirt or flaw of the crankshaft and rotor tapered portion, and dry them with a clean cloth. Then, confirm that it is not pulled out with above torque.

- Tighten the alternator rotor bolt [B] while holding the alternator rotor steadily with the flywheel holder.

Special Tool - Flywheel Holder: 57001–1313

Torque - Alternator Rotor Bolt: 120 N·m (12 kgf·m, 87 ft·lb)

Step 2:

- Loosen the alternator rotor bolt until turn it by hand.
- Tighten the alternator rotor bolt again while holding the alternator rotor steadily with the flywheel holder.
- Observe the tightening torque. If tightening torque is over the specified torque the alternator rotor bolt damaged.

Special Tool - Flywheel Holder: 57001-1313

Torque - Alternator Rotor Bolt: 120 N·m (12 kgf·m, 87 ft·lb)

- Apply a thin coat of molybdenum disulfide grease to the shaft [A], and install it and starter idle gear [B].
- Install the alternator cover (see Alternator Cover Installation).

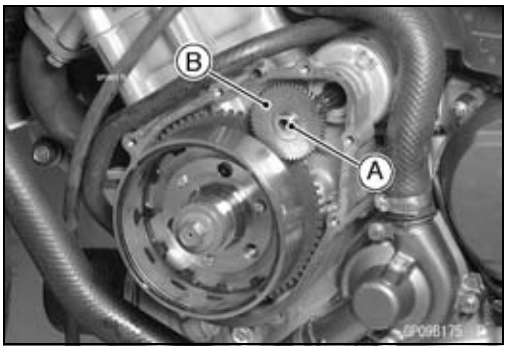

Charging System

Alternator Inspection

There are three types of alternator failures: short, open (wire burned out), or loss in rotor magnetism. A short or open in one of the coil wires will result in either a low output, or no output at all. A loss in rotor magnetism, which may be caused by dropping or hitting the alternator, by leaving it near an electromagnetic field, or just by aging, will result in low output.

- To check the alternator output voltage, do the following procedures.

○Turn off the ignition switch.
○Remove the fuel tank (see Fuel System chapter).
○Supply fuel to the throttle body with an auxiliary fuel tank.

○Disconnect the alternator lead connector [A].
○Connect the hand tester [B] as shown in the table 1.
○Start the engine, and run it 6 000 rpm 5 minutes.
○Run it at the rpm given in the table 1.
○Note the voltage readings (total 3 measurements).

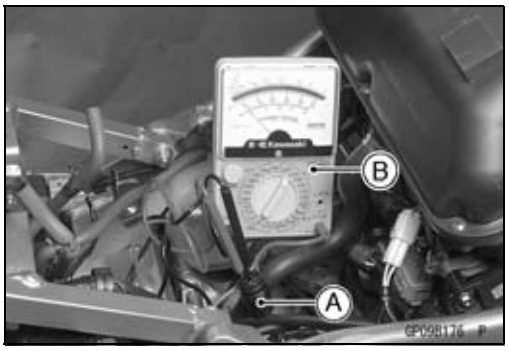

Table 1 Alternator Output Voltage

Tester	Connections		Reading
Range	Tester (+) to	Tester (–) to	@ 4 000 rpm
250 V AC	One Black lead	Another Black lead	42.4 ~ 63.6 V

★If the output voltage shows the value in the table, the alternator operates properly.
★If the output voltage shows a much higher than the value in the table, the regulator/rectifier is damaged. A much lower reading than that given in the table indicates that the alternator is defective.
● Check the stator coil resistance as follows.
○Stop the engine.
○Connect the commercially available tester as shown in the table 2.
○Note the readings (total 3 measurement).

Table 2 Stator Coil Resistance

Tester Range	Connections		Reading
	Tester (+) to	Tester (–) to	
× 1 Ω	One Black lead	Another Black lead	0.3 ~ 0.4 Ω

★If there is more resistance than shown in the table, or no tester reading (infinity) for any two leads, the stator has an open lead and must be replaced. Much less than this resistance means the stator is shorted, and must be replaced.
● Using the highest resistance range of the hand tester, measure the resistance between each of the black leads and chassis ground.
★Any hand tester reading less than infinity (∞) indicates a short, necessitating stator replacement.
★If the stator coils have normal resistance, but the voltage check showed the alternator to be defective; then the rotor magnets have probably weakened, and the rotor must be replaced.

Regulator/Rectifier Inspection

● Remove:
Seat Cover (see Frame chapter)
Fuel Tank (see fuel System chapter)
Connectors [A] (disconnect)
Clamp [B]

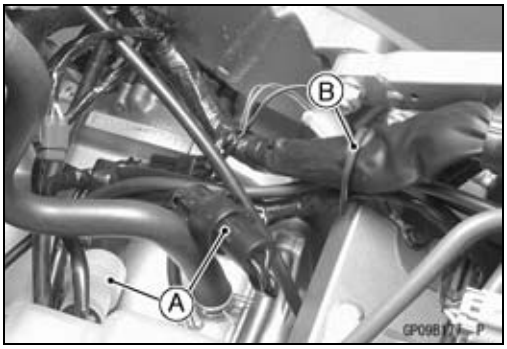

Bolts [A]
Regulator/Rectifier [B]

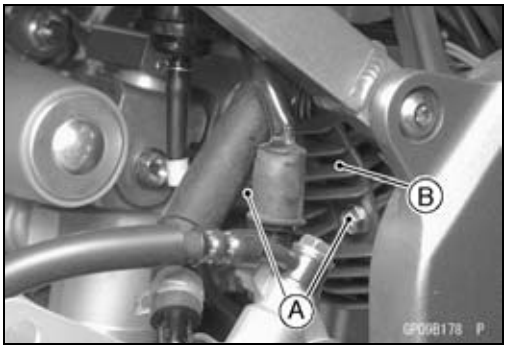

Charging System

Rectifier Circuit Check:

- Check the rectifier resistance as follows.
- Disconnect the regulator/rectifier connector.
- Connect the hand tester (special tool) to the regulator/rectifier as shown in the table, and check the resistance in both directions of each diode in the rectifier following the table.

★The resistance should be low in one direction and more than ten times as much in the other direction. If any two leads are low or high in both directions, the rectifier is defective and the regulator/rectifier must be replaced.

NOTE

○*The actual meter reading varies with the meter used and the individual rectifier, but, generally speaking the lower reading should be from zero to one half the scale.*

No.	Connections		Reading	Tester Range
	Tester (+)	Tester (-)		
1	BK1	BK/BL	∞	x 10Ω or x 100Ω
2	BK2			
3	BK3			
4	BK1	BK/W	1/2 scale or less	
5	BK2			
6	BK3			
7	BK/BL	BK1		
8		BK2		
9		BK3		
10	BK/W	BK1	∞	
11		BK2		
12		BK3		

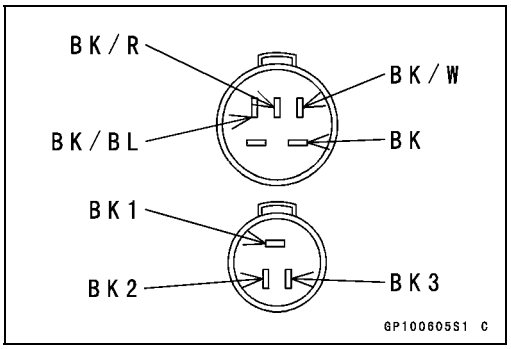

Regulator Circuit Check:

To test the regulator out of circuit, use three 12 V batteries and a test light (12 V 3 ~ 6 W bulb in a socket with leads).

CAUTION

The test light works as an indicator and also a current limiter to protect the regulator/rectifier from excessive current. Do not use an ammeter instead of a test light.

Charging System

● Do the 1st step regulator circuit test.
○Connect the test light and the 12 V battery to the regulator/rectifier as shown.
○Check BK1, BK2, and BK3 terminal respectively.
★If the test light turns on, the regulator/rectifier is defective. Replace it.
★If the test light does not turn on, continue the test.

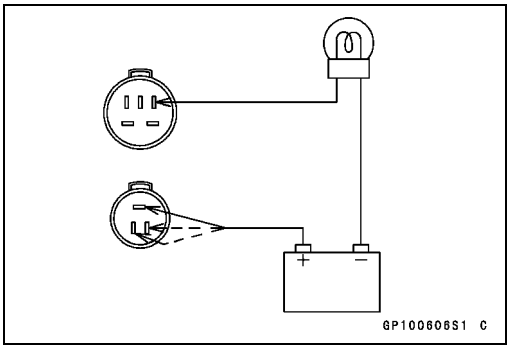

● Do the 2nd step regulator circuit test.
○Connect the test light and the 12 V battery in the same manner as specified in the "1st step regulator circuit test".
○Apply 12 V to the BK/R terminal.
○Check BK1, BK2, and BK3 terminal respectively.
★If the test light turns on, the regulator/rectifier is defective. Replace it.
★If the test light does not turn on, continue the test.

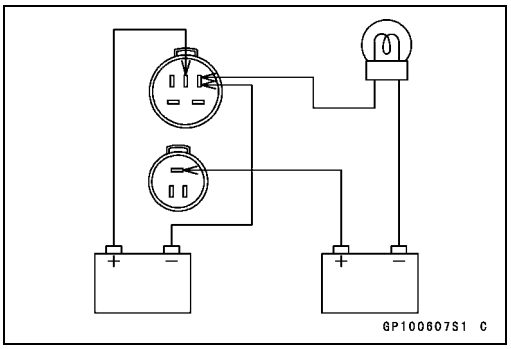

● Do the 3rd step regulator circuit test
○Connect the test light and the 12 V battery in the same manner as specified in the "1st step regulator circuit test".
○Momentarily apply 24 V to the BK/R terminal by adding a 12 V battery.
○Check BK1, BK2, and BK3 terminals respectively.

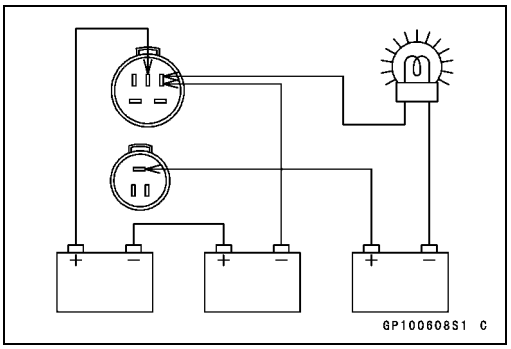

CAUTION

Do not apply more than 24 volts. If more than 24 volts is applied the regulator/rectifier may be damaged. Do not apply 24 V more than a few seconds. If 24 volts is applied for more than a few seconds, the regulator/rectifier may be damaged.

★If the test light did not light when the 24 V was applied momentarily to the BK/R terminal, the regulator/rectifier is defective. Replace it.
★If the regulator/rectifier passes all of the tests described, it may still be defective. If the charging system still does not work properly after checking all of the components and the battery, test the regulator/rectifier by replacing it with a known good unit.

Charging System

Charging Voltage Inspection

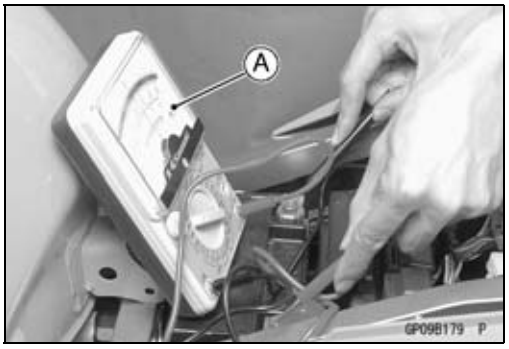

- Check the battery condition (see Battery section).
- Warm up the engine to obtain actual alternator operating conditions.
- Remove the seats (see Frame chapter).
- Check that the ignition switch is turned off, and connect the hand tester [A] as shown in the table.

Special Tool - Hand Tester: 57001–1394

- Start the engine, and note the voltage readings at various engine speeds with the headlight turned on and then turned off. (Disconnect the headlight connector in the upper fairing.) The readings should show nearly battery voltage when the engine speed is low, and, as the engine speed rises, the readings should also rise. But they must be kept under the specified voltage.

Charging Voltage

Tester Range	Connections		Reading
	Tester (+) to	Tester (–) to	
25 V DC	Battery (+)	Battery (–)	14.2 ~ 15.2 V

- Turn off the ignition switch to stop the engine, and disconnect the hand tester.

★If the charging voltage is kept between the values given in the table, the charging system is considered to be working normally.

★If the charging voltage is much higher than the values specified in the table, the regulator/rectifier is defective or the regulator/rectifier leads are loose or open.

★If the charging voltage does not rise as the engine speed increases, then the regulator/rectifier is defective or the alternator output is insufficient for the loads. Check the alternator and regulator/rectifier to determine which part is defective.

Charging System

Charging System Circuit

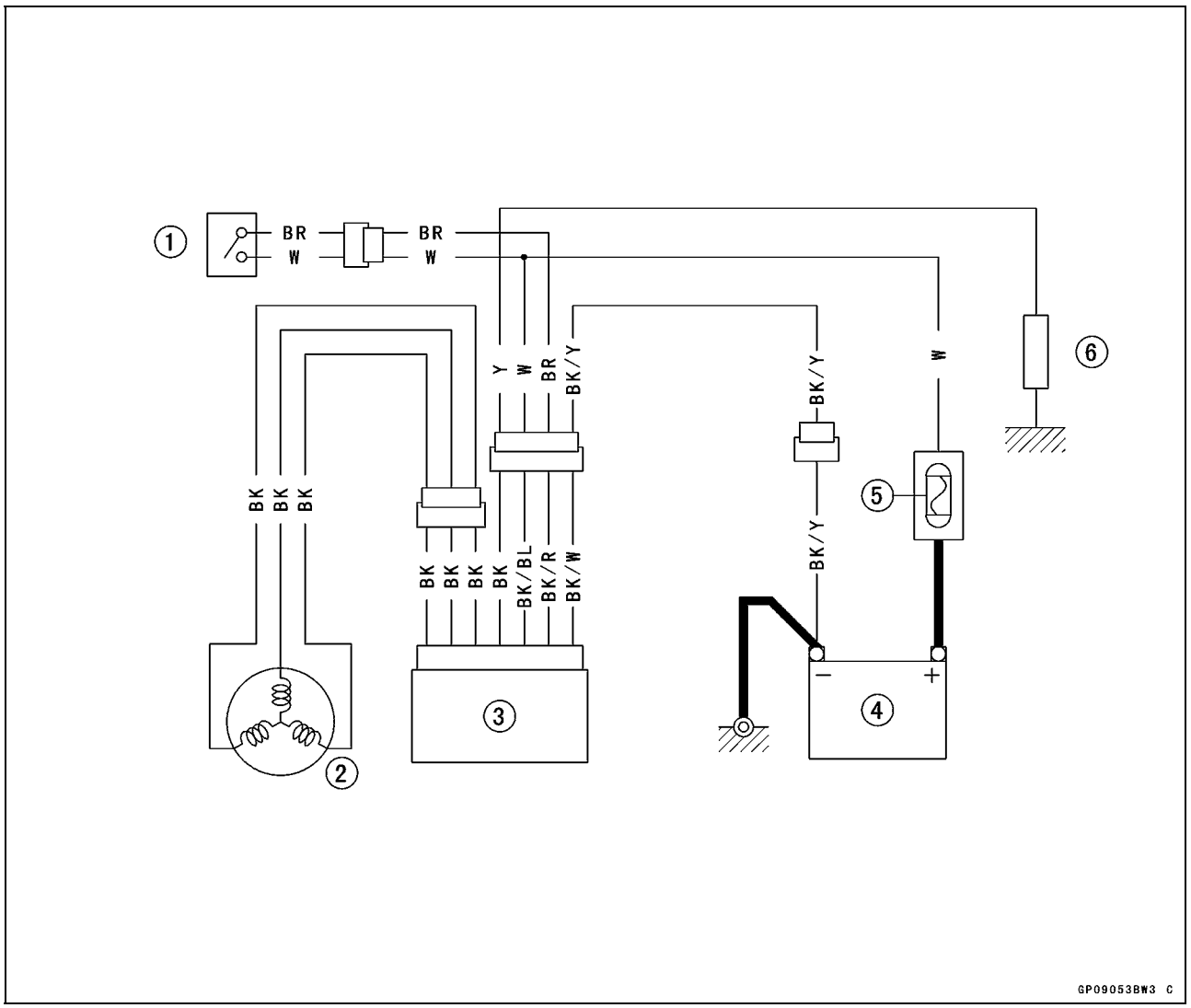

1. Ignition Switch
2. Alternator
3. Regulator/Rectifier
4. Battery
5. Main Fuse 30 A
6. Load

Ignition System

Ignition System Troubleshooting

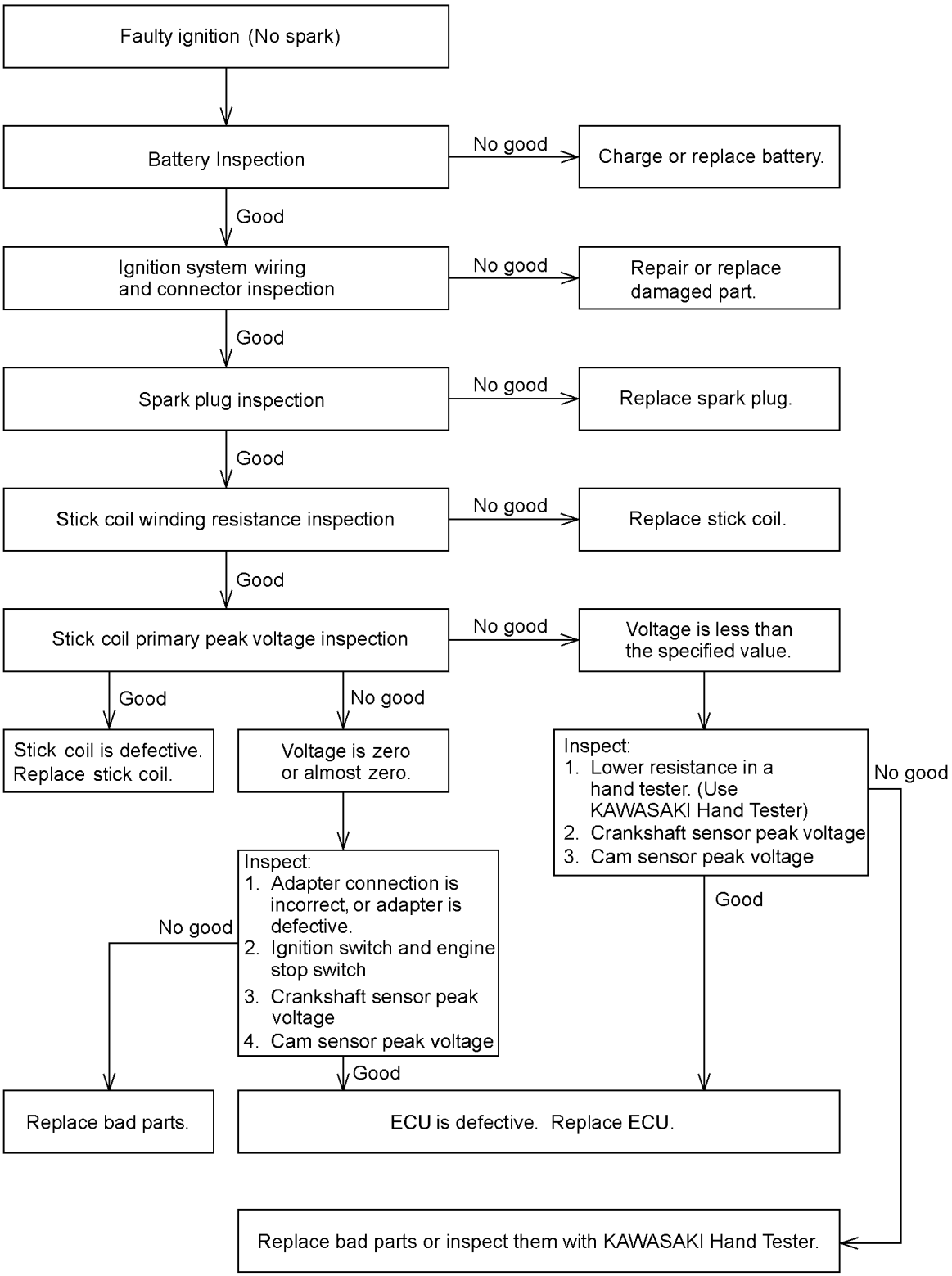

⚠ WARNING

The ignition system produces extremely high voltage. Do not touch the spark plugs or stick coils while the engine is running, or you could receive a severe electrical shock.

CAUTION

Do not disconnect the battery leads or any other electrical connections when the ignition switch is on, or while the engine is running. This is to prevent IC igniter damage.
Do not install the battery backwards. The negative side is grounded. This is to prevent damage to the diodes and IC igniter.

Crankshaft Sensor Removal

- Remove:
  Fuel Tank (see Fuel System chapter)
  Reserve Tank
  Right Lower Fairing (see Frame chapter)
  Crankshaft Sensor Lead Connector [A]
  Side Stand Switch Lead Connector [B]

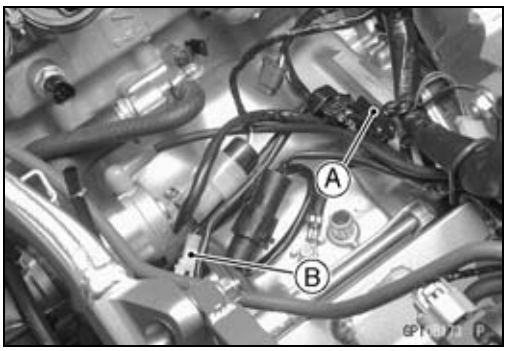

Neutral Switch Lead Connector [A]

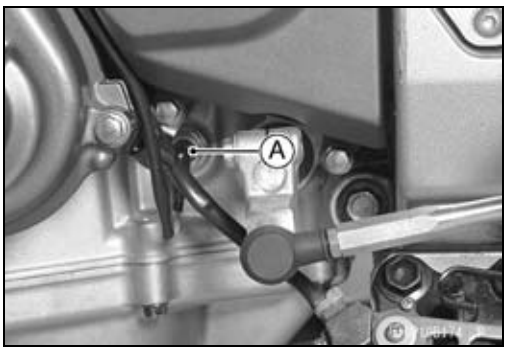

Crankshaft Sensor Cover
Oil Pressure Switch Terminal [A]

- Remove the crankshaft sensor [B] by taking off the crankshaft sensor bolts [C].

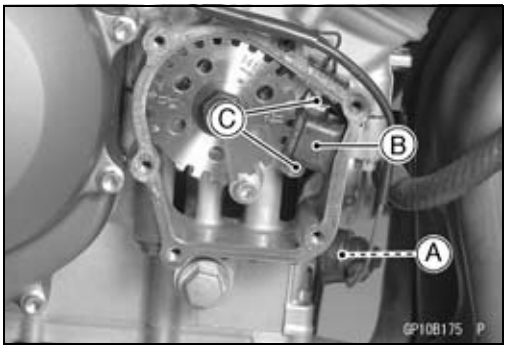

Ignition System

Crankshaft Sensor Installation

- Route the crankshaft sensor lead correctly (see Cable, Wire, and Hose Routing in Appendix chapter).
- Tighten:

  Torque - Crankshaft Sensor Bolts: 5.9 N·m (0.60 kgf·m, 52 in·lb)

- Apply silicone sealant [A] to the crankshaft sensor lead grommet and crankcase halves mating surface on the front and rear sides of the crankshaft sensor cover mount.

  Sealant - Kawasaki Bond (Silicone Sealant): 56019–120

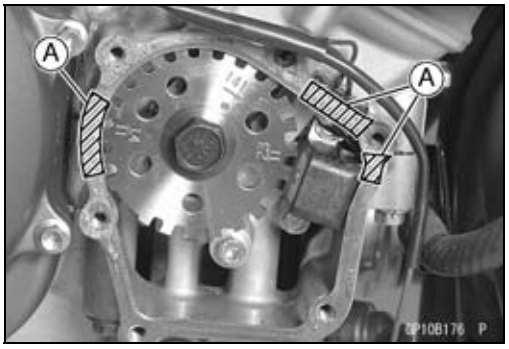

- Apply a non-permanent locking agent to the threads of the crankshaft sensor cover bolt [A].
- Install the clamps [B] and tighten the crankshaft sensor cover bolts.

  Torque - Crankshaft Sensor Cover Bolts: 9.8 N·m (1.0 kgf·m, 87 in·lb)

- Install the oil pressure switch terminal and tighten the terminal bolt.

  Torque - Oil Pressure Switch Terminal Bolt: 1.5 N·m (0.15 kgf·m, 13 in·lb)

- Apply grease to the terminal.
- Install the other remove parts.

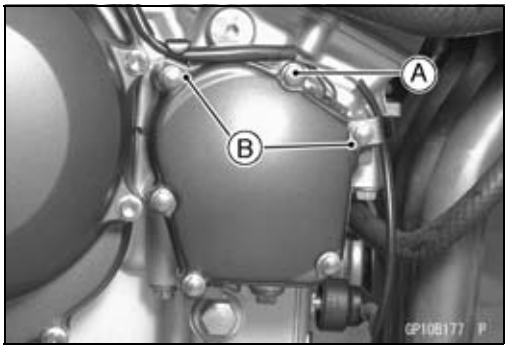

Crankshaft Sensor Inspection

- Remove:
  Fuel Tank (see Fuel System chapter)
  Crankshaft Sensor Lead Connector [A]
- Set the hand tester [B] to the × 100 Ω range and connect the (+) lead to the black lead [C] and (–) lead to the black/yellow lead [D] in the connector [A].

  Special Tool - Hand Tester: 57001– 1394

★If there is more resistance than the specified value, the coil has an open lead and must be replaced. Much less than this resistance means the coil is shorted, and must be replaced.

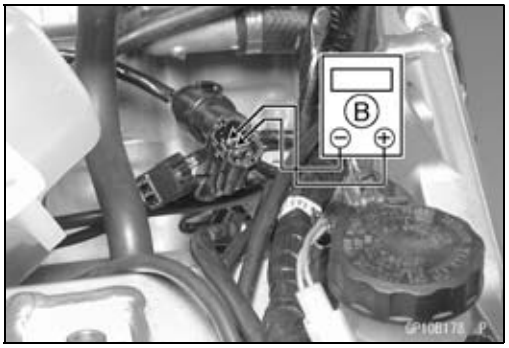

Crankshaft Sensor Resistance: 460 ~ 470 Ω

- Using the highest resistance range of the tester, measure the resistance between the crankshaft sensor leads and chassis ground.

★Any tester reading less than infinity (∞) indicates a short, necessitating replacement of the crankshaft sensor assembly.

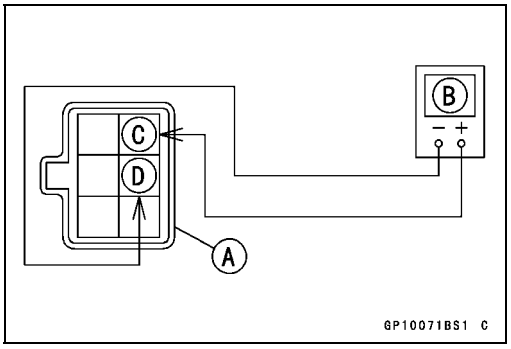

Crankshaft Sensor Peak Voltage

- Remove:
  Fuel Tank (see Fuel System chapter)
  Crankshaft Sensor Lead Connector
- Set the Hand Tester [B] to the × 10 V DC range, and connect it a commercially available peak voltage adapter [E] as shown in the diagram.
- Connect the black lead (-) of the Adapter to black/yellow lead [D] and red lead (+) to black lead [C] in the crankshaft sensor connector [A].
- Turn the ignition switch and engine stop switch on.

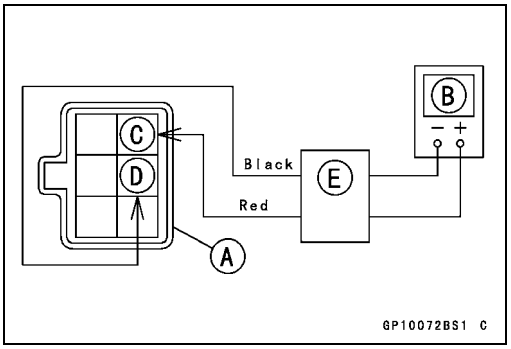

- Grasp the clutch lever and pushing the starter button, turn the engine 4 ~ 5 seconds with the transmission gear in neutral to measure the crankshaft sensor peak voltage.
- Repeat the measurement 5 or more times.

Crankshaft Sensor Peak Voltage
Standard: 2.0 V or more

Special Tool - Hand Tester: 57001–1394

Recommended Tool-
Peak Voltage Adapter
Type: KEK-54-9-B
Brand: KOWA SEIKI

Stick Coil (Ignition Coil together with Spark Plug Cap) Removal

- Remove the air cleaner housing (see Fuel System chapter).
- Disconnect the stick coil connectors [A].
- Pull the stick coils [B] off the spark plugs.

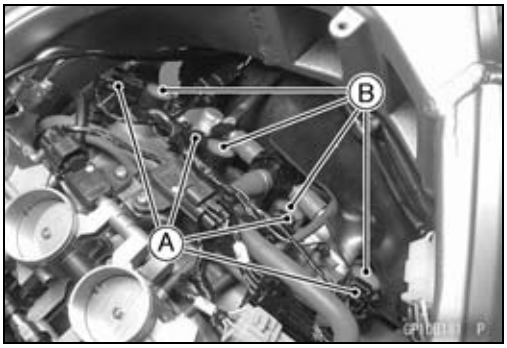

CAUTION
Do not pry the connector part of the coil while removing the coil.

Stick Coil (Ignition Coil together with Spark Plug Cap) Installation

- Install the coil using the following steps.
○Insert the coil [A] as shown being careful of the coil installation direction.
○Connect the connectors [B].
○Stick coil connectors angle [C]: about 45°

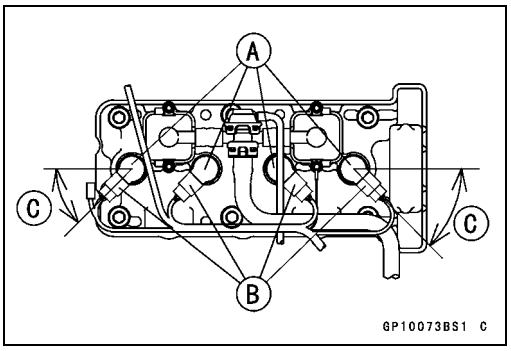

CAUTION
Do not tap the coil head while installing the coil.

Ignition System

Stick Coil (Ignition Coil together with Spark Plug Cap) Inspection

- Remove the stick coils (see this chapter).
- Measure the primary winding resistance [A] as follows.

○Connect the hand tester between the coil terminals.
○Set the tester to the × 1 Ω range, and read the tester.

- Measure the secondary winding resistance [B] as follows.

○Connect the tester between the plug terminal and (–) coil terminal.
○Set the tester to the × 1 kΩ range and read the tester.

Ignition Coil Winding Resistance
Primary Windings: 1.2 ~ 1.6 Ω
Secondary Windings: 8.5 ~ 11.5 kΩ

★If the tester does not read as specified, replace the coil.

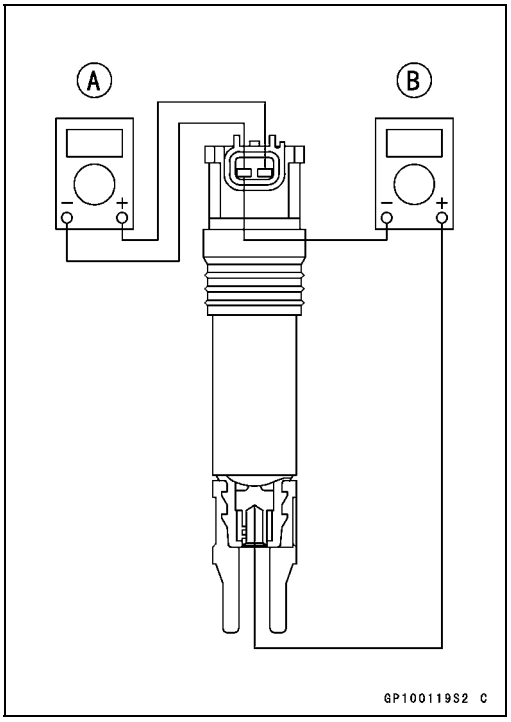

Stick Coil Primary Peak Voltage

NOTE

○*Be sure the battery is fully charged.*

- Remove the stick coils (see this chapter), but do not remove the spark plugs.
- Measure the primary peak voltage as follows.

○Install the new spark plug [A] into each stick coil [B], and ground them onto the engine.
○Connect a commercially available peak voltage adapter [C] into the hand tester [D] which is set to the × 250 V DC range.
○Connect the adapter to the lead wire-peak voltage adapter [E] which is connected between the stick coil connector and stick coil.
[F] ECU

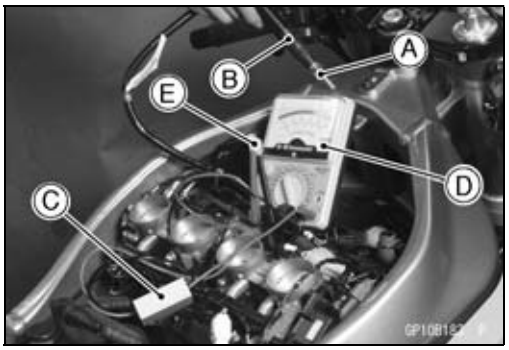

Recommended Tool-
Peak Voltage Adapter
Type: KEK-54-9-B
Brand: KOWA SEIKI

Special Tools - Hand Tester: 57001–1394
Lead Wire-Peak Voltage Adapter: 57001–1449

Primary Lead Connection
Adapter (R, +) to lead wire-peak voltage adapter (W)
Adapter (BK, -) to lead wire-peak voltage adapter (R)

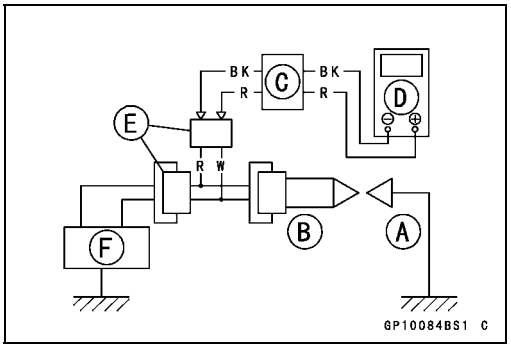

⚠ WARNING

To avoid extremely high voltage shocks, do not touch the spark plugs or tester connections.

- Turn the ignition switch and the engine stop switch ON.
- Pushing the starter button, turn the engine 4 ~ 5 seconds with the transmission in neutral to measure the primary peak voltage.
- Repeat the measurements 5 times for one stick coil.

Stick Coil Primary Peak Voltage
Standard: 100 V or more

- Repeat the test for the other stick coil.

★If the reading is less than the specified value, check the following.
Stick Coils (see Stick Coil Inspection)
Crankshaft Sensor (see Crankshaft Sensor Inspection)
ECU (see Fuel System (DFI) chapter)

Spark Plug Removal

- Remove:
  Air Cleaner Housing (see Fuel System chapter)
  Stick Coils
- Remove the spark plugs using the 16 mm plug wrench.

Owner's Tool - Spark Plug Wrench, 16 mm: 92110–1146

Spark Plug Installation

- Insert the spark plug vertically into the plug hole with the plug [A] installed in the plug wrench [B].

Owner's Tool - Spark Plug Wrench, 16 mm: 92110–1146

- Tighten:

Torque - Spark Plugs: 13 N·m (1.3 kgf·m, 113 in·lb)

- Fit the stick coils securely.

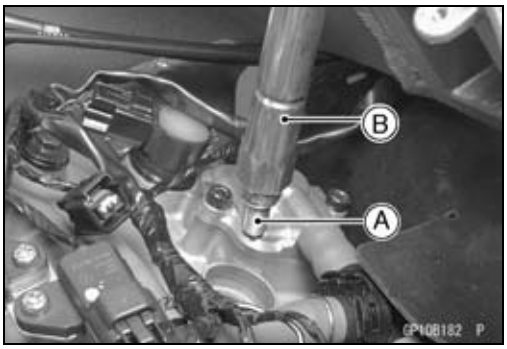

Spark Plug Cleaning and Inspection

○Refer to the Electrical System in the Periodic Maintenance chapter.

Spark Plug Gap Inspection

○Refer to the Electrical System in the Periodic Maintenance chapter.

Ignition System

Camshaft Position Sensor Removal

- Remove the lower fairings (see Frame chapter).
- Lift the left side of the baffle plate and take out the camshaft position sensor lead connector.
- Remove the left under side radiator bolt.
- Move the bottom of the radiator toward the front [A], and disconnect the camshaft position sensor lead connector [B].

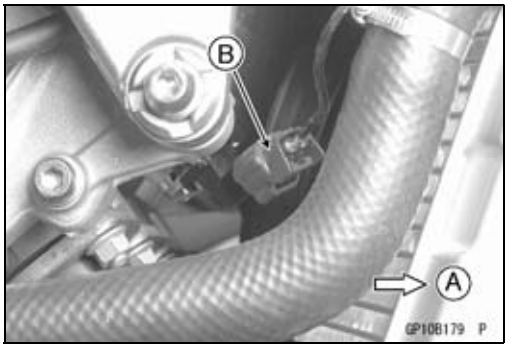

- Remove:
  Camshaft Position Sensor Bolt [A]
  Camshaft Position Sensor [B]

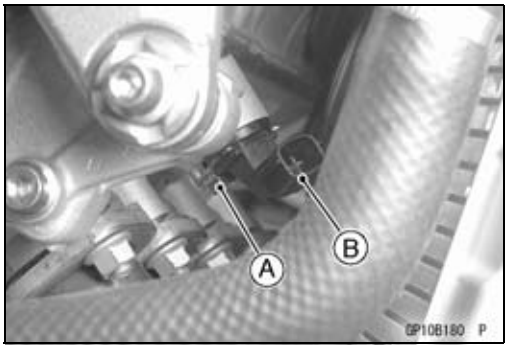

Camshaft Position Sensor Installation

- Apply grease or engine oil to the O-ring on the camshaft position sensor.

Tighten:

Torque - Camshaft Position Sensor Bolt: 12 N·m (1.2 kgf·m, 106 in·lb)

Camshaft Position Sensor Inspection

- Remove:
  Right Lower Fairing (see Frame chapter)
  Camshaft Position Sensor Lead Connector (disconnect)
- Set the hand tester to the × 10 Ω range and connect it to the terminals.

Special Tool - Hand Tester: 57001-1394

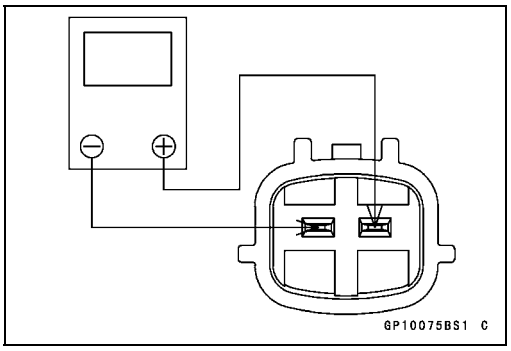

★If there is more resistance than the specified value, the sensor coil has an open lead and must be replaced. Much less than this resistance means the sensor coil is shorted, and must be replaced.

Camshaft Position Sensor Resistance: 490 ~ 590 Ω

- Using the highest resistance range of the tester, measure the resistance between the camshaft position sensor leads and chassis ground.

★Any tester reading less than infinity (∞) indicates a short, necessitating replacement of the camshaft position sensor.

Camshaft Position Sensor Peak Voltage Inspection

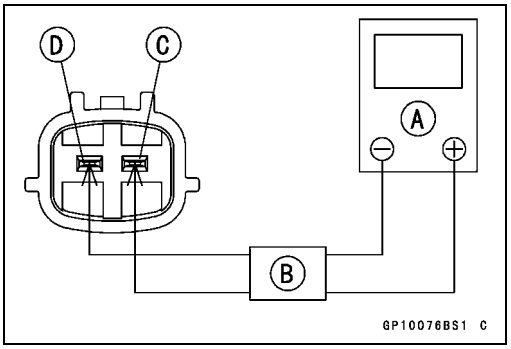

- Remove:
  Right Lower Inner Cover (see Frame chapter)
  Camshaft Position Sensor Lead Connector
- Set the commercially available tester [A] to the 10 V DC range.
- Connect commercially available peak voltage adapter [B] to the hand tester and camshaft position sensor leads in the terminals.

Recommended Tool-
Peak Voltage Adapter
Type: KEK-54-9-B
Brand: KOWA SEIKI

Connections:

Camshaft Position Sensor Terminal		Adapter		Hand Tester
(+) [C]	←	Red	→	(+)
(–) [D]	←	Black	→	(–)

- Turn the ignition switch and engine stop switch on.
- Pushing the starter button, turn the engine 4 ~ 5 seconds with the transmission gear in neutral to measure the camshaft position sensor peak voltage.
- Repeat the measurement 5 or more times.

Camshaft Position Sensor Peak Voltage
Standard: 0.1 V or more

★If the peak voltage is lower than the standard, inspect the camshaft position sensor.

Ignition System

Interlock Operation Inspection

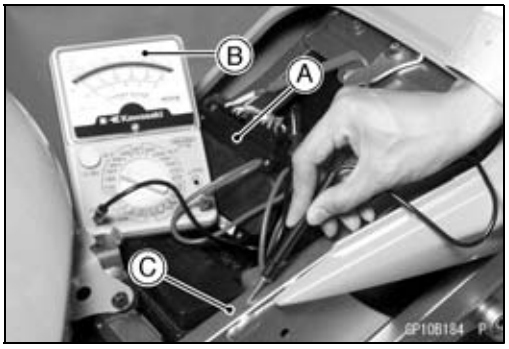

● Remove the seats (see Frame chapter).

1st Check

● Measure the terminal voltage of the G/BK lead in the junction box connector [A] in accordance with the following procedure.

○Set the tester [B] to the 25 V DC range, connect it to the G/BK lead and frame ground [C].

Connection:
Tester (+) Terminal → G/BK Lead Terminal
Tester (–) Terminal → Frame Ground

Condition:
Transmission Gear → 1st Position
Clutch Lever → Release
Side Stand → Down

○Turn the ignition switch on.
○Read the voltage.

Interlock Operation Voltage
Standard: 4 V or more

★If the voltage is lower than the standard, inspect the side stand switch, starter lockout switch and junction box. And their parts are normality, replace the ECU.
★If the voltage is standard, push the starter button to check as follows.
○If the starter motor does not turn, the ECU is good, and check the starter system circuit.
○If the starter motor turned, ECU is defective. Replace the ECU.

2nd Check

Raise the rear wheel off the ground with a stand.

- Set the following conditions.

Condition:

Transmission Gear → 1st Position

Clutch Lever → Release

Side Stand → Up

- Turn the ignition switch on and push the starter button.

★If turn the engine, inspect the starter lockout switch, side stand switch and junction box.

★If their parts are normality, replace the ECU

- Set the following conditions.

Condition:

Transmission Gear → 1st Position

Clutch Lever → Pull in

Side Stand → Up

- Turn the ignition switch on and push the starter button.

★If the engine dose not turn, inspect the starter lockout switch, side stand switch and junction box.

★If their parts are normality, replace the ECU.

- Inspect the engine for its secure stop after the following operations are completed.
- Run the engine to the following conditions.

Condition:

Transmission Gear → 1st Position

Clutch Lever → Release

Side Stand → Up

- Set the side stand on the ground, then the engine will stop.

★If engine does not be stop, inspect the starter lockout switch, side stand switch and junction box.

★If their parts are normality, replace the ECU.

IC Igniter Inspection

○The IC igniter is built in the ECU [A].

- Refer to the Interlock Operation Inspection, Ignition System Troubleshooting chart and Fuel System (DFI) chapter for ECU Inspection.

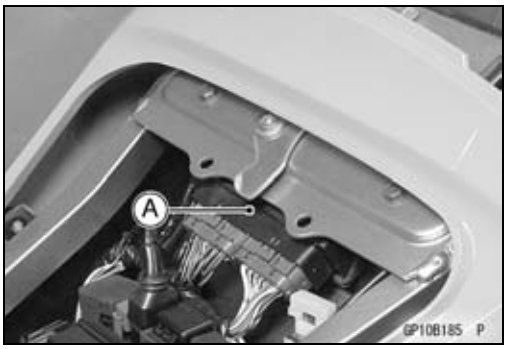

Ignition System

Ignition System Circuit

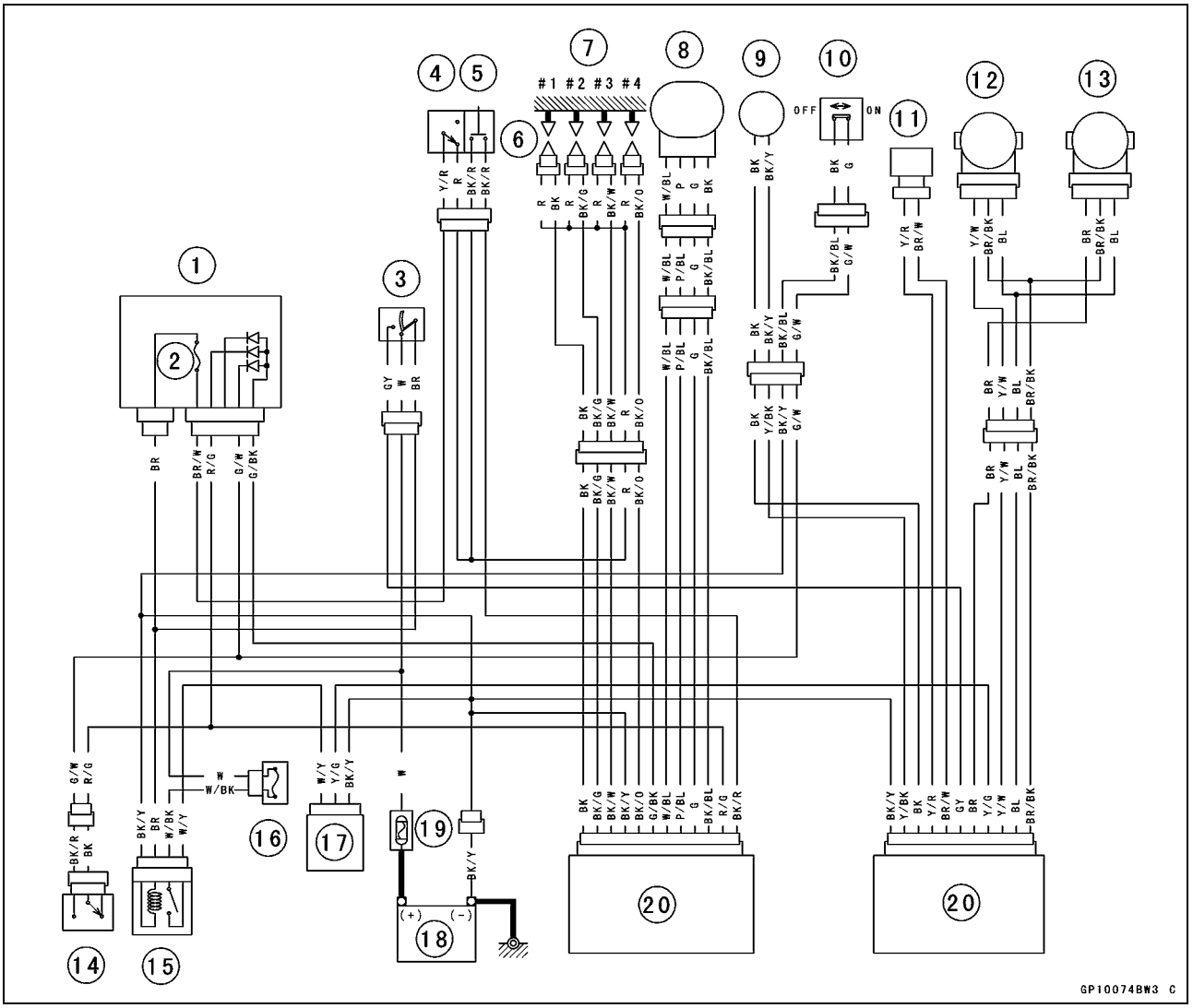

1. Junction Box
2. Ignition Fuse 10A
3. Ignition Switch
4. Engine Stop Switch
5. Starter Button
6. Stick Coils
7. Spark Plugs
8. Subthrottle Motor
9. Crankshaft Sensor
10. Side Stand Switch
11. Camshaft Position Sensor
12. Main Throttle Sensor
13. Subthrottle Sensor
14. Starter Lockout Switch
15. ECU Main Relay
16. ECU Fuse 15A
17. Vehicle-down Sensor
18. Battery
19. Main Fuse 30A
20. ECU (Electronic Control Unit)

Electric Starter System

Starter Motor Removal

- Remove the fuel tank (see Fuel System (DFI) chapter).
- Slide back the rubber cap.
- Remove the starter motor terminal bolt [A] and the mounting bolts [B].
- Pull out the starter motor [C].

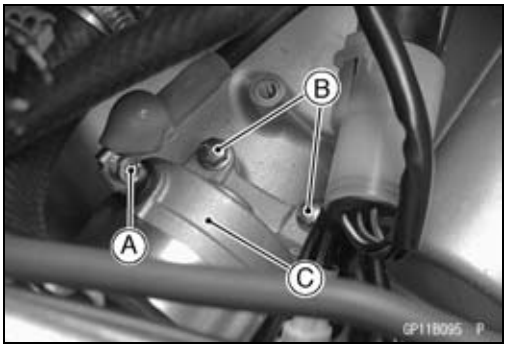

Starter Motor Installation

CAUTION
Do not tap the starter motor shaft or body. Tapping the shaft or body could damage the motor.

- When installing the starter motor, clean the starter motor legs [A] and crankcase [B] where the starter motor is grounded.

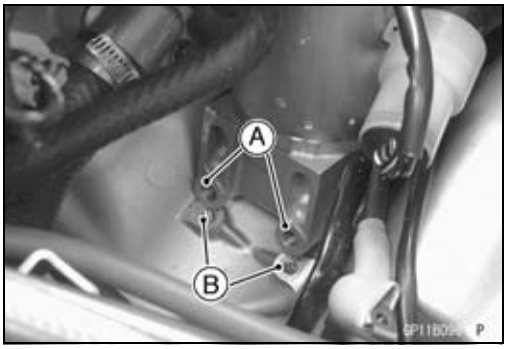

- Replace the O-ring [A] with a new one.
- Apply grease to the O-ring.
- Tighten:

  Torque - Starter Motor Mounting Bolts: 9.8 N·m (1.0 kgf·m, 87 in·lb)

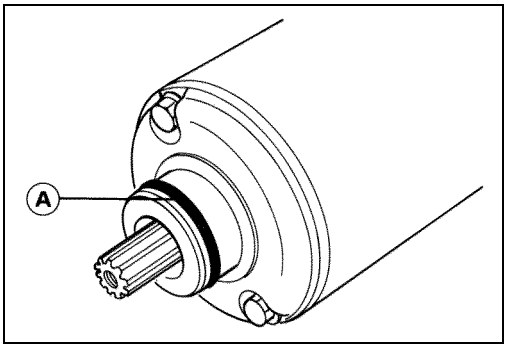

Starter Motor Disassembly

- Take off the starter motor through bolts [A] and remove both end covers [B] and pull the armature out of the yoke [C].

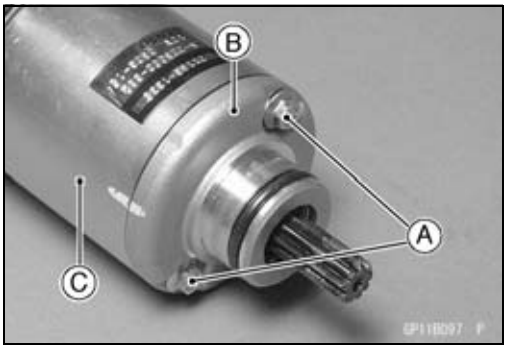

Starter Motor Assembly

- Apply a thin coat of grease to the oil seal [A].
- Fit the toothed washer [B] into the left-hand end cover.
- Install the washer [C].

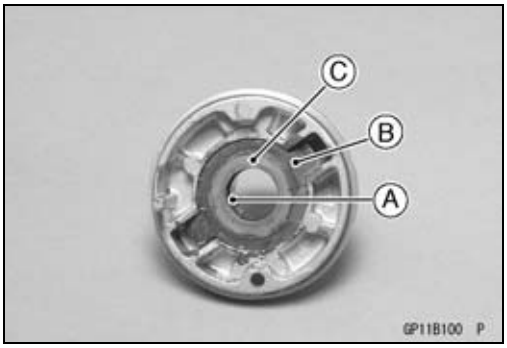

Electric Starter System

- Press the springs and holding the brush leads with suitable clips [A] as shown.
- Put the armature [B] among the brushes.

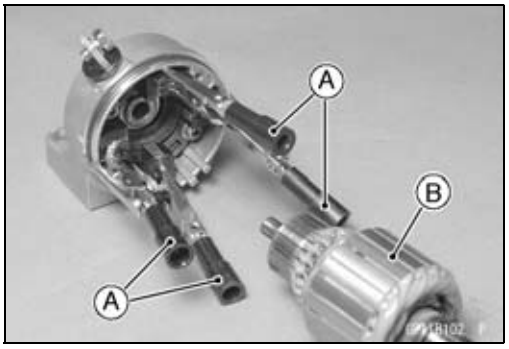

- Install the O-rings [A] as shown.

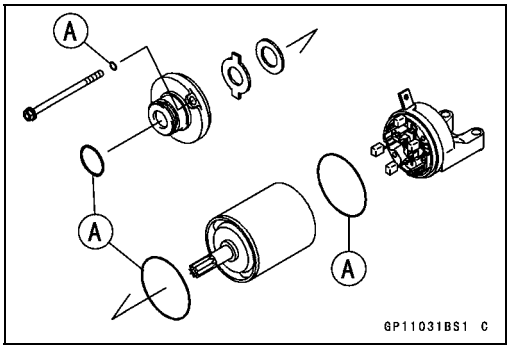

- Align the groove [A] in the right-hand end cover and the hollow mark [B] on the yoke.

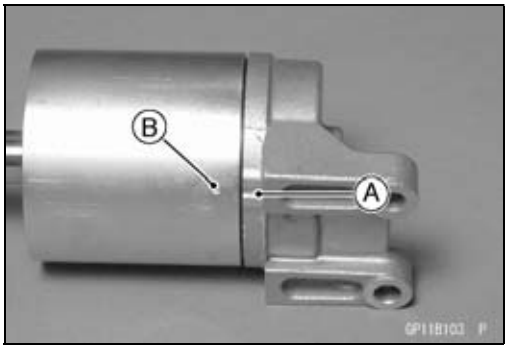

- Align the hollow mark [A] on the left-hand end cover and the hollow mark [B] on the yoke.

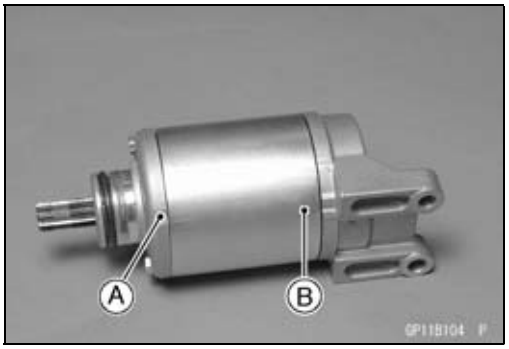

Brush Inspection

- Measure the length [A] of each brush.

★If any is worn down to the service limit, replace the brush holder assembly.

Starter Motor Brush Length

Standard:	**7 mm (0.28 in.)**
Service Limit:	**3.5 mm (0.14 in.)**

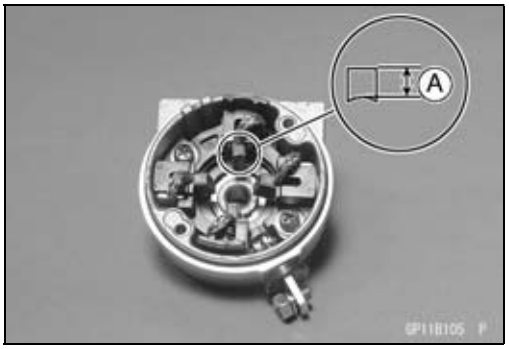

Commutator Cleaning and Inspection

- Smooth the commutator surface [A] if necessary with fine emery cloth [B], and clean out the grooves.

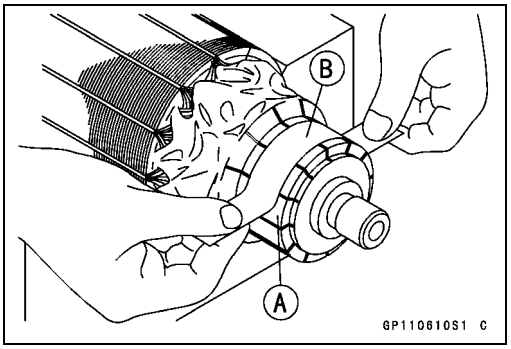

- Measure the diameter [A] of the commutator [B].

★If the commutator diameter is less than the service limit, replace the starter motor with a new one .

Commutator Diameter

Standard:	**24 mm (0.94 in.)**
Service Limit:	**23 mm (0.91 in.)**

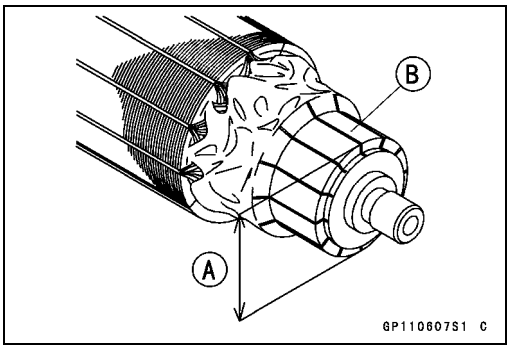

Armature Inspection

- Using the × 1 Ω hand tester range, measure the resistance between any two commutator segments [A].

Special Tool - Hand Tester: 57001–1394

★If there is a high resistance or no reading (∞) between any two segments, a winding is open and the starter motor must be replaced.

- Using the highest hand tester range, measure the resistance between the segments and the shaft [B].

★If there is any reading at all, the armature has a short and the starter motor must be replaced.

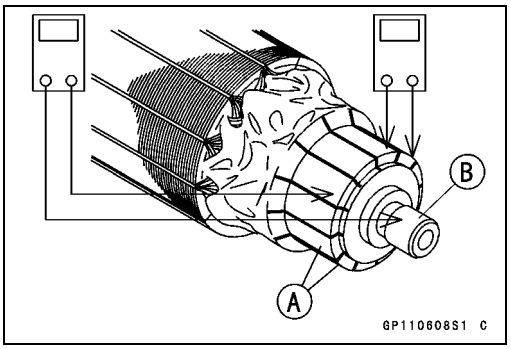

NOTE

○*Even if the foregoing checks show the armature to be good, it may be defective in some manner not readily detectable with the hand tester. If all other starter motor and starter motor circuit components check good, but the starter motor still does not turn over or only turns over weakly, replace the starter motor with a new one.*

Brush Lead Inspection

- Using the × 1 Ω hand tester range, measure the resistance as shown.
  [A] Terminal Bolt and Positive Brush
  [B] Right–hand End Cover and Negative Brush

Special Tool - Hand Tester: 57001–1394

★If there is not close to zero ohms, the brush lead has an open. Replace the positive brush assembly and/or the negative brush subassembly.

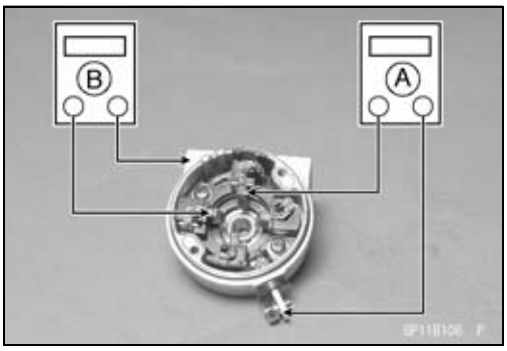

Electric Starter System

Right–hand End Cover Assembly Inspection

- Using the highest hand tester range, measure the resistance as shown.
  [A] Terminal and Right–hand End Cover

Special Tool - Hand Tester: 57001–1394

★If there is any reading, the right-hand end cover assembly have a short. Replace the right-hand end cover assembly.

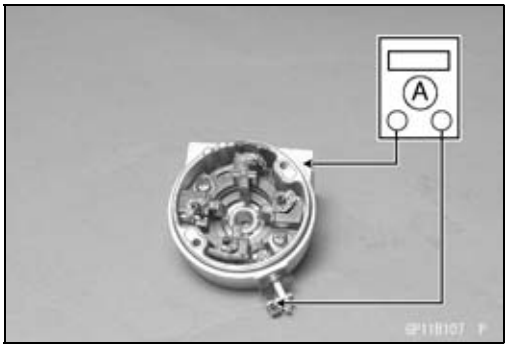

Starter Relay Inspection

- Remove:
  Seats (see Frame chapter)
  Starter Cable [A]
  Battery Cable [B]
  Connector [C]
  Starter Relay [D]

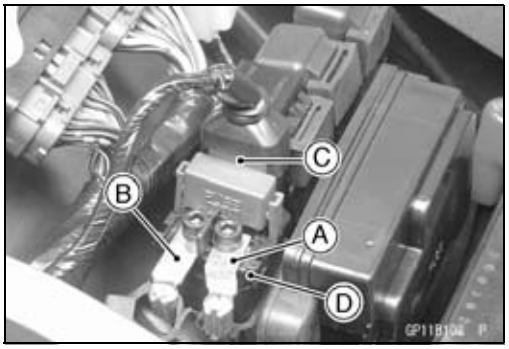

- Connect the hand tester [A] and 12 V battery [B] to the starter relay [C] as shown.

Special Tool - Hand Tester: 57001–1394

★If the relay does not work as specified, the relay is defective. Replace the relay.

Testing Relay

Tester Range:	**× 1 Ω range**
Criteria:	**When battery is connected → 0 Ω**
	When battery is disconnected → ∞ Ω

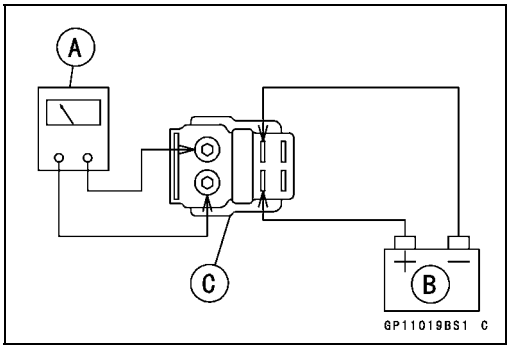

Electric Starter System

Electric Starter Circuit

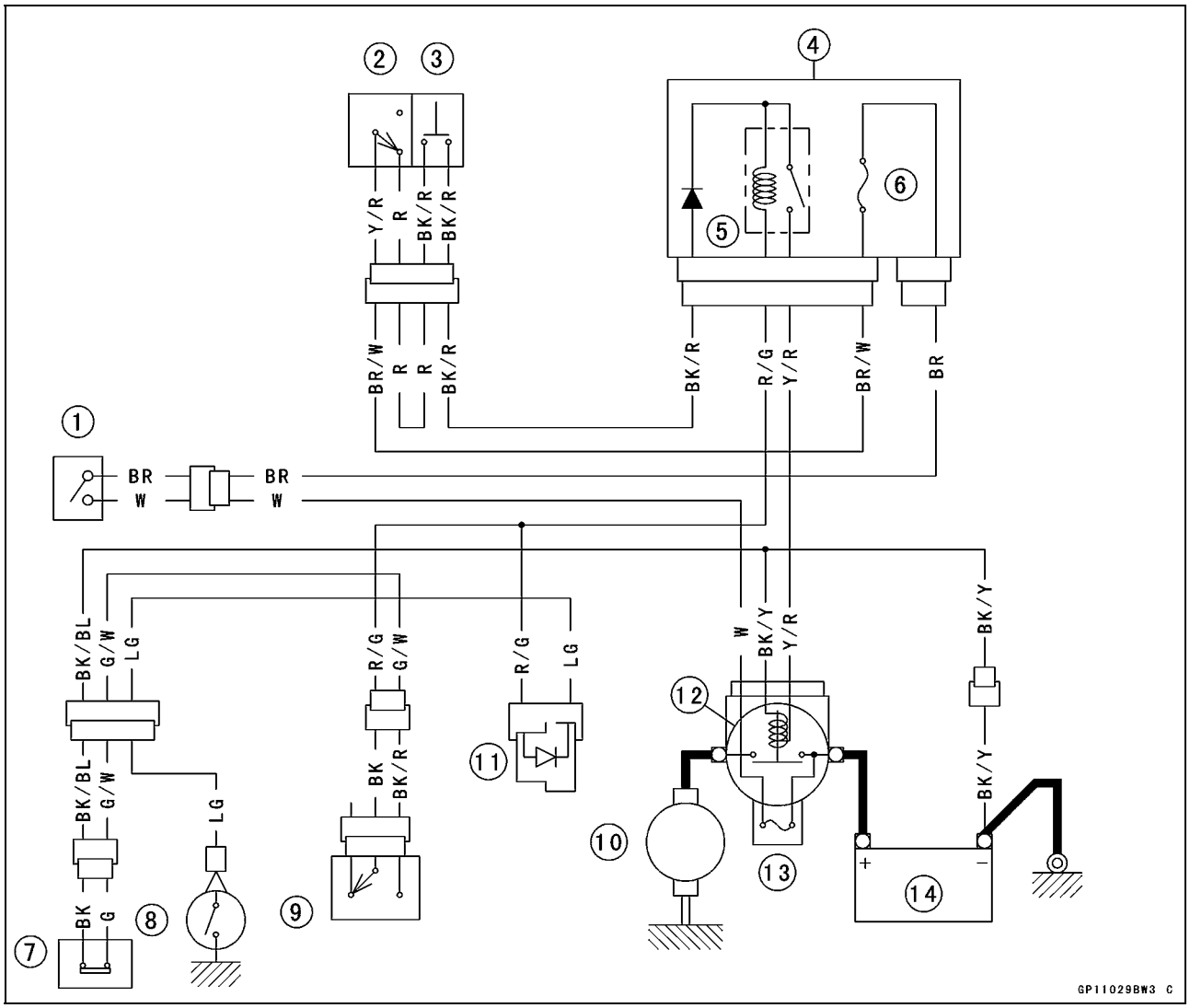

1. Ignition Switch
2. Engine Stop Switch
3. Starter Button
4. Junction Box
5. Starter Circuit Relay
6. Ignition Fuse 10A
7. Side Stand Switch
8. Neutral Switch
9. Starter Lockout Switch
10. Starter Motor
11. Diode
12. Starter Relay
13. Main Fuse 30 A
14. Battery

Lighting System

This motorcycle adopt the daylight system and have a headlight relay in the junction box. The headlight does not go on when the ignition switch and the engine stop switch are first turned on. The headlight comes on after the starter button is released and stays on until the ignition switch is turned off. The headlight will go out momentarily whenever the starter button is pressed and come back on when the button is released.

Headlight Beam Horizontal Vertical Adjustment

- Remove the inner (upper) fairing (see Frame chapter).
- Turn the horizontal adjuster [A] on the headlight in or out until the beam points straight ahead.
- Turn the vertical adjusters [B] on the headlight in or out to adjust the headlight vertically.

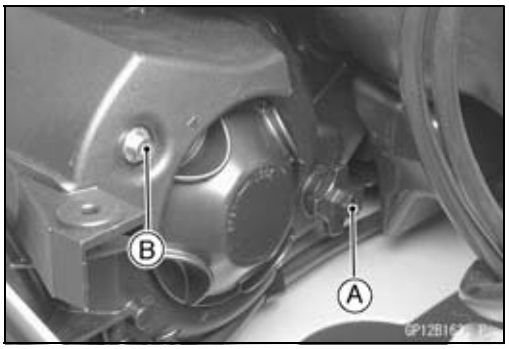

NOTE

○*On high beam, the brightest points should be slightly below horizontal with the motorcycle on its wheels and the rider seated. Adjust the headlight(s) to the proper angle according to local regulations.*

○*For US model, the proper angle is 0.4 degrees below horizontal. This is 50 mm (2 in.) drop at 7.6 m (25 ft) measured from the center of the headlights with the motorcycle on its wheels and the rider seated.*

50 mm (2 in.) [A]
Center of Brightest Spot [B]
7.6 m (25 ft) [C]
Height of Headlight Center [D]
Low Beam [E]
High Beam [F]

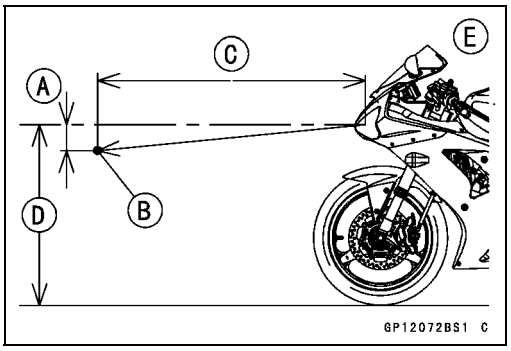

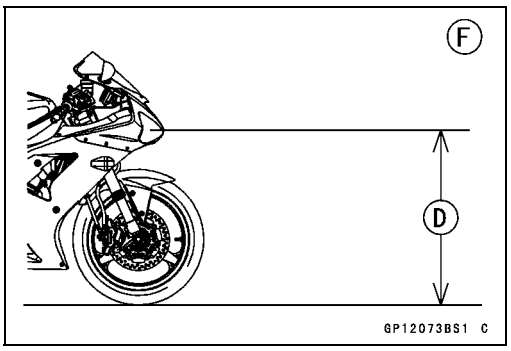

Lighting System

Headlight Bulb Replacement

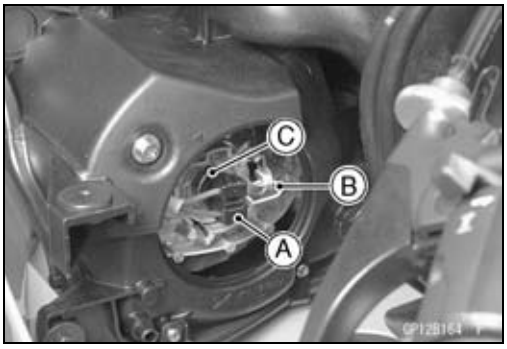

- Remove:
  Headlight Bulb Dust Cover
  Headlight Connector [A]
  Hook [B]
  Headlight Bulb [C]

CAUTION

When handling the quartz–halogen bulb, never touch the glass portion with bare hands. Always use a clean cloth. Oil contamination from hands or dirty rags can reduce bulb life or cause the bulb to explode.

NOTE

○*Clean off any contamination that inadvertently gets on the bulb with alcohol or soap and water solution.*

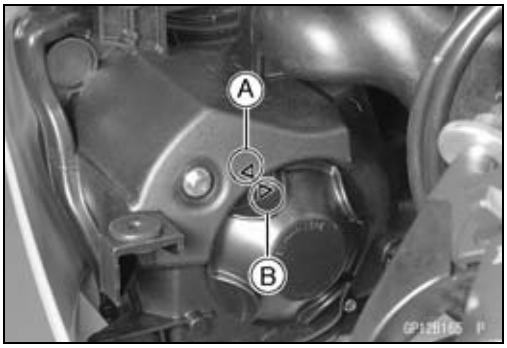

- Replace the headlight bulb.
- Align the mark [A] on the headlight and mark [B] the dust cover, and turn the dust cover clockwise so that the mark [B] faces topward.
- After installation, adjust the headlight aim (see this chapter).

Lighting System

Headlight/Tail Light Circuit

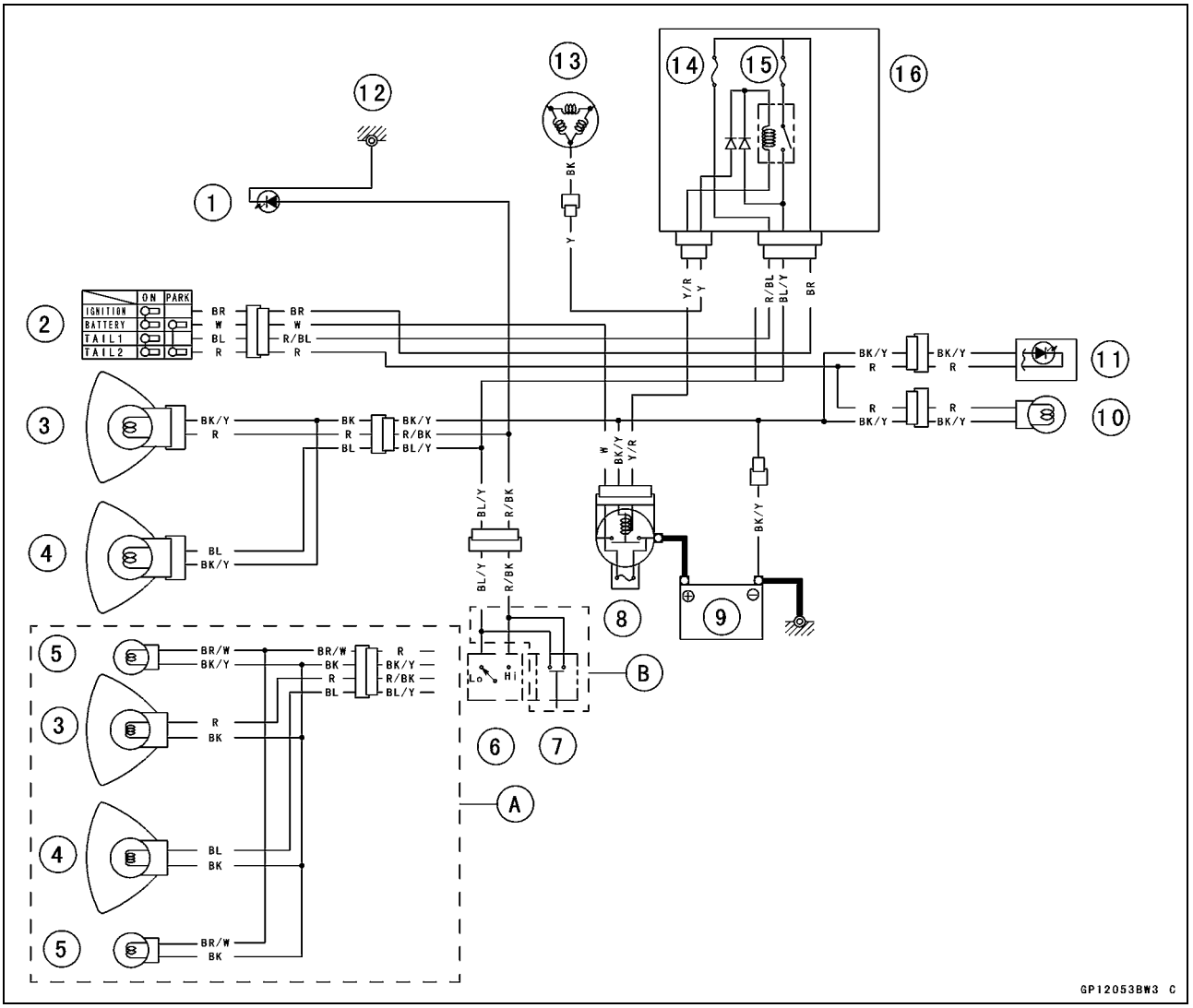

1. High Beam Indicator Light
2. Ignition Switch
3. Headlight (High Beam)
4. Headlight (Low Beam)
5. City Light
6. Dimmer Switch
7. Passing Button
8. Main Fuse 30A
9. Battery
10. License Plate Light
11. Tail Light
12. Frame Ground
13. Alternator
14. Tail Light Fuse 10A
15. Headlight Fuse 10A
16. Junction Box

A: Other than United States, Canadian and Australian Models
B: Other than United States and Canadian Models

Turn Signal Relay Inspection

- Remove:
  Seats (see Frame chapter)
  Turn Signal Relay [A]

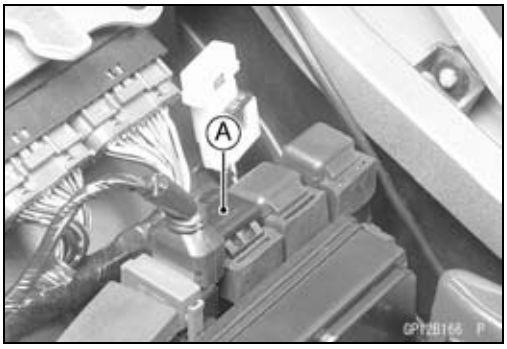

- Connect one 12 V battery and turn signal lights as indicated in the figure, and count how may times the lights flash for one minute.
  Turn Signal Relay [A]
  Turn Signal Lights [B]
  12 V Battery [C]

★If the lights do not flash as specified, replace the turn signal relay.

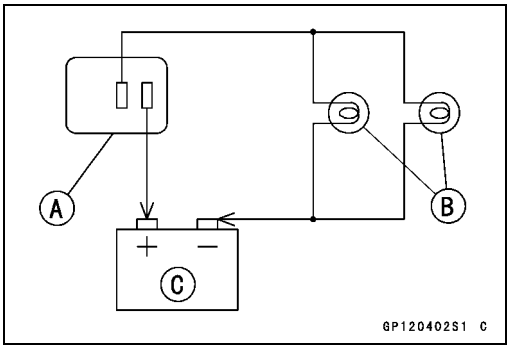

Testing Turn Signal Relay

Load		Flashing times (c/m*)
The Number of Turn Signal Lights	Wattage (W)	
1**	21	140 - 250
2	42	75 – 95

(*): Cycle(s) per minute
(**): Correspond to “one light burned out”

Lighting System

Turn Signal Light Circuit

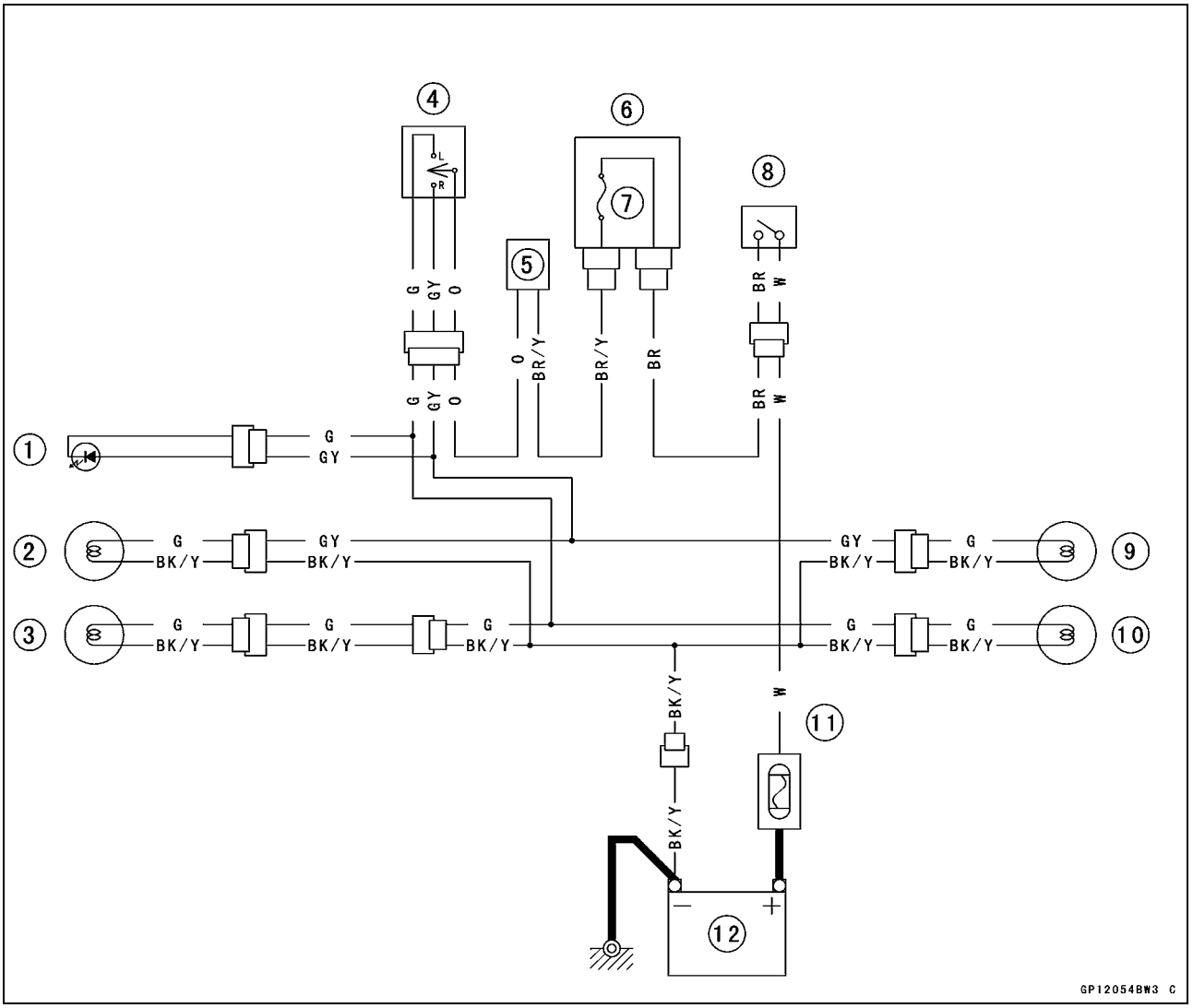

1. Turn Signal Indicator Lights (Right & Left)
2. Front Right Turn Signal Light
3. Front Left Turn Signal Light
4. Turn Signal Switch
5. Turn Signal Relay
6. Junction Box
7. Turn Signal Relay Fuse 10A
8. Ignition Switch
9. Rear Right Turn Signal Light
10. Rear Left Turn Signal Light
11. Main Fuse 30 A
12. Battery

Radiator Fan System

⚠ WARNING

The radiator fan is connected directly to the battery. The fan may start even if the ignition switch is off. NEVER TOUCH THE RADIATOR FAN UNTIL THE RADIATOR FAN CONNECTOR IS DISCONNECTED. TOUCHING THE FAN BEFORE THE CONNECTOR IS DISCONNECTED COULD CAUSE INJURY FROM THE FAN BLADES.

Fan System Circuit Inspection

- Remove the left lower fairing (see Frame chapter)
- Disconnect the leads from the radiator fan switch [A].
- Using an auxiliary wire [B], connect the radiator fan switch leads.

★If the fan rotates, inspect the fan switch.

★If the fan does not rotate, inspect the following.

Leads and Connectors
Main Fuse and Fan Fuse
Fan Motor

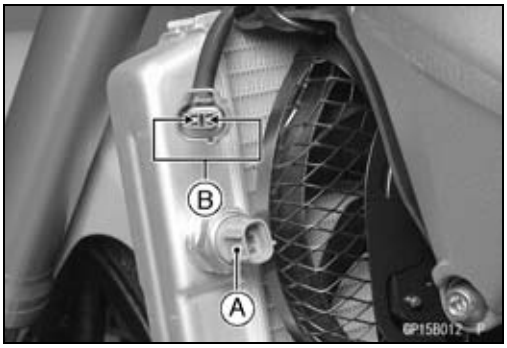

Fan Motor Inspection

- Remove the left lower fairing (see Frame chapter).
- Disconnect the 2-pin connector [A] in the fan motor leads.
- Using two auxiliary wires, supply battery [B] power to the fan motor.

★If the fan does not rotate, the fan motor is defective and must be replaced.

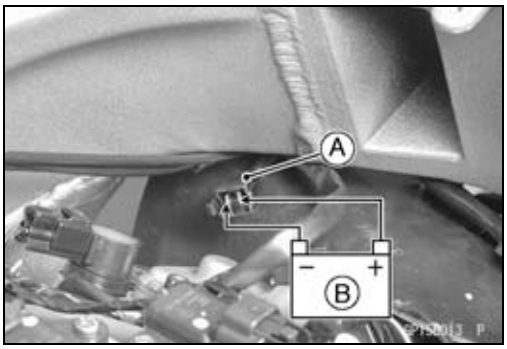

Radiator Fan System

Radiator Fan Circuit

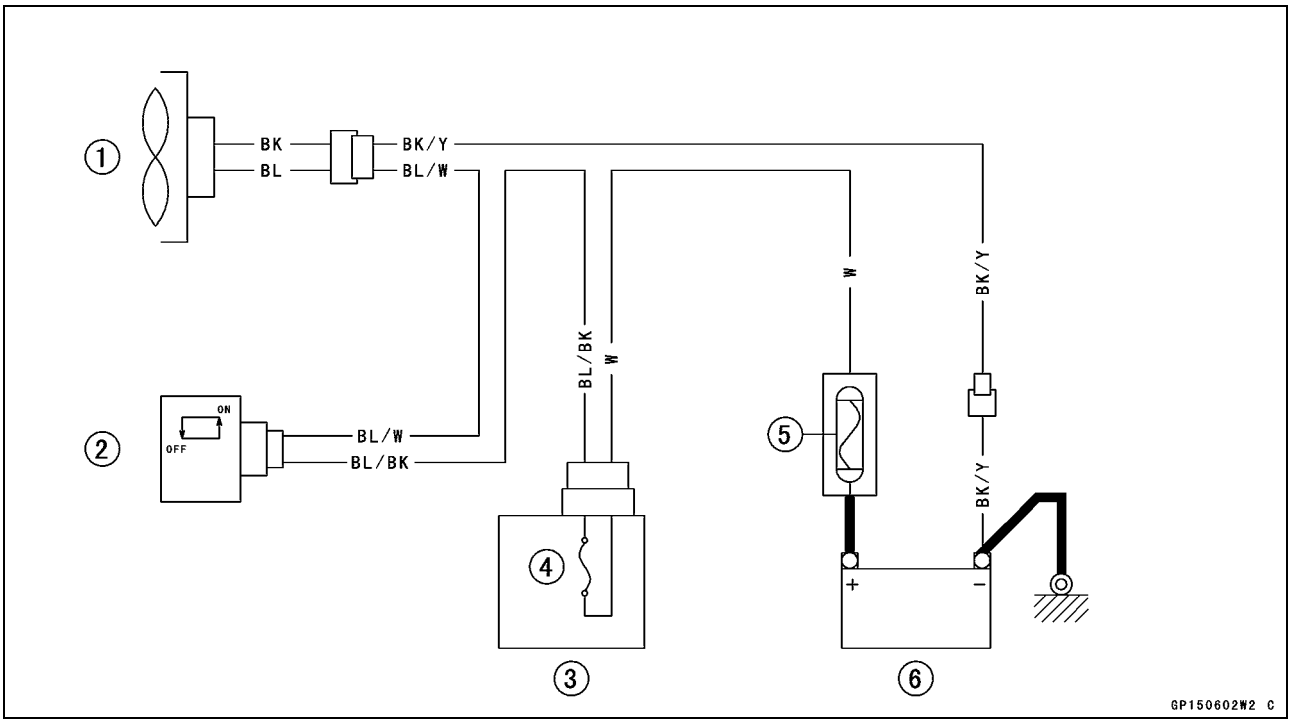

1. Radiator Fan
2. Radiator Fan Switch
3. Junction Box
4. Fan Fuse 10 A
5. Main Fuse 30 A
6. Battery

Meter

Meter Assembly Removal

- Remove:
  Upper Fairing (see Frame chapter)
  Meter Bracket Bolts [A]

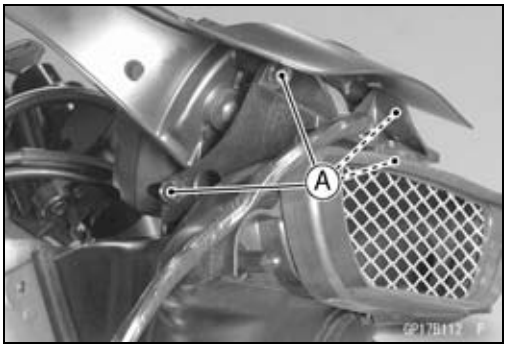

- Slide the dust cover [A] and remove the wiring connector.
- Remove the meter unit by taking off the mounting screws [B] with the washers.

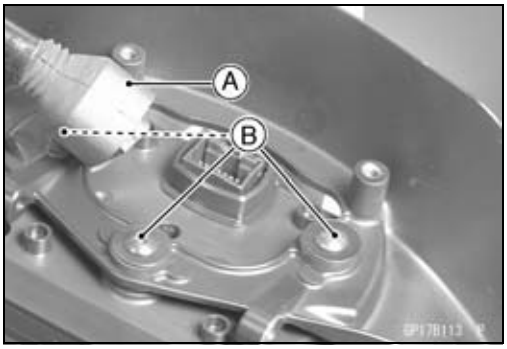

CAUTION
Place the meter unit so that the face is up. If a meter unit is left upside down or sideways for any length of time, it will malfunction.

Meter Assembly Disassembly

- Remove:
  Meter Assembly (see Meter Assembly Removal)
  Screws [A]
  Lower Meter Cover [B]

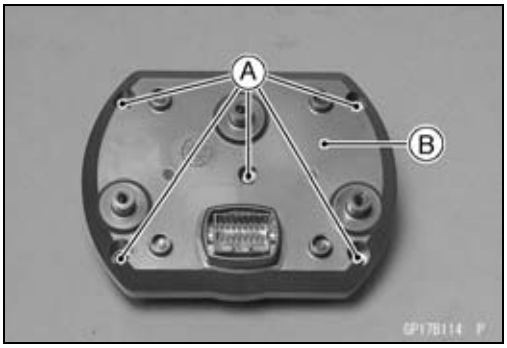

- Separate the meter liquid crystal display assembly [A] and upper meter cover [B].

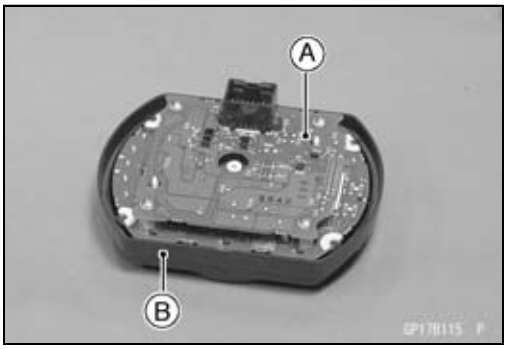

Meter, Gauge, Indicator Unit

Electronic Combination Meter Assembly Inspection

- Remove the meter assembly [A].

[1] Ignition
[2] Fuel Reserve Switch
[3] Stop Watch (+)
[4] Lap Time (+)
[5] Neutral Indicator Light (LED) Ground (–)
[6] FI Indicator Light (LED) Ground (–)
[7] Tachometer Pulse
[8] Water Temperature Sensor
[9] Ground (–)
[10] Battery (+)
[11] Oil Pressure Warning Indicator Light (LED) Ground (–)
[12] Speed Sensor Supply Voltage
[13] Right Turn Signal Light (LED) (+)
[14] Left Turn Signal Indicator Light (LED) (+)
[15] High Beam Indicator Light (LED)
[16] Speed Sensor Pulse

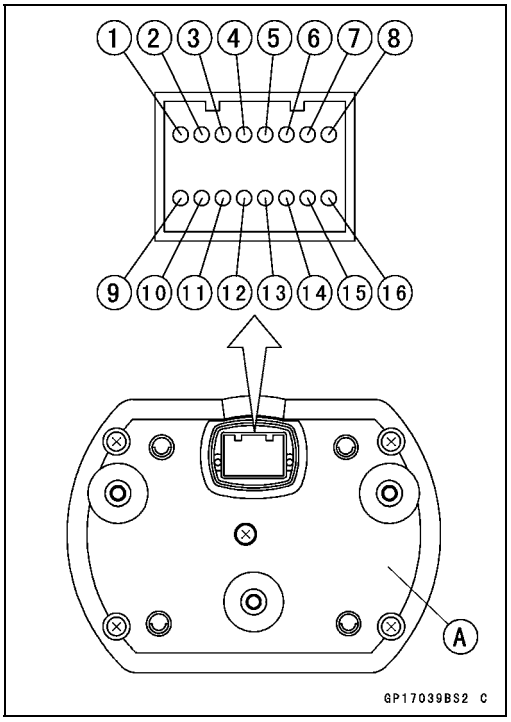

CAUTION

Do not drop the meter unit. Place the meter unit so that it faces upward. If the meter assembly is left upside down or sideways for a long time or dropped, it will malfunction.

CAUTION

Do not short each terminals.

Liquid Crystal Display (LCD) Segments Check:

- Connect the harness adapter to the meter assembly connector.

Special Tool - Harness Adapter: 57001–1542

- Using the auxiliary wires, connect the 12 V battery to the each connector of harness adapter as follows.

○Connect the battery positive terminal to the terminal [10].
○Connect the battery negative terminal to the terminal [9].

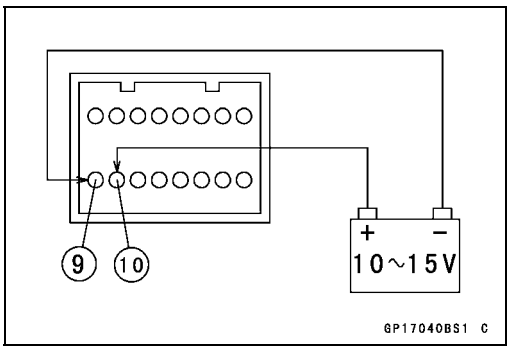

- Connect the terminal [1] to the terminal [10].

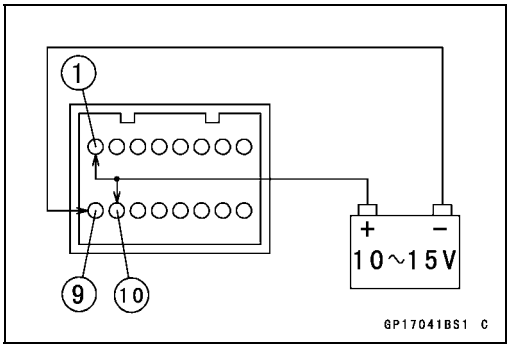

○The tachometer LCD segments momentarily to it last readings two times and segment movement is reversal.
○When the terminals are connected, all the LCD segments [A] and LED warning light [B] appear for three seconds.
★If the LCD segments and LED warning light will not appear, replace the meter assembly.
● Disconnect the terminal [1].
○All the LCD segments and LED warning light disappear.
★If the segments do not disappear, replace the meter assembly.

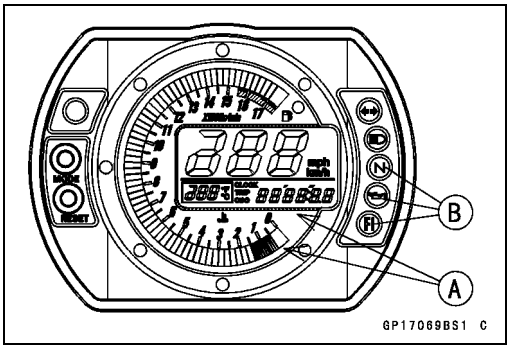

MODE AND RESET BUTTON Operation Check:
● Connect the 12 V battery and terminals in the same manner as specified in the "Liquid Crystal Display (LCD) Segments Check".
● Check that the display [B] change to the ODO, TRIP, and CLOCK and STOP WATCH displays each time the mode selector button [A] is pressed.
★If the display function does not work, replace the meter assembly.

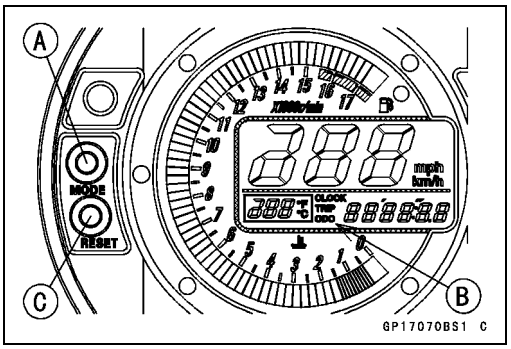

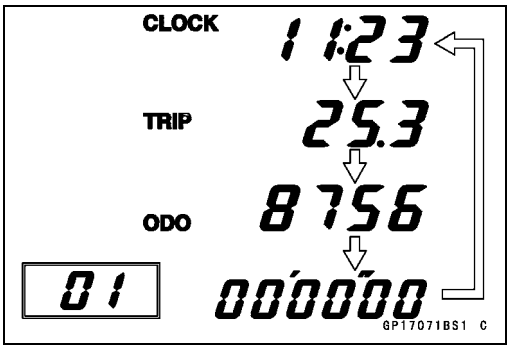

● Indicate the clock mode.
● Check that when the RESET button in CLOCK mode is pushed for more than two seconds, the meter display turns to the clock set mode.
○Both the hour and minute display start flashing.

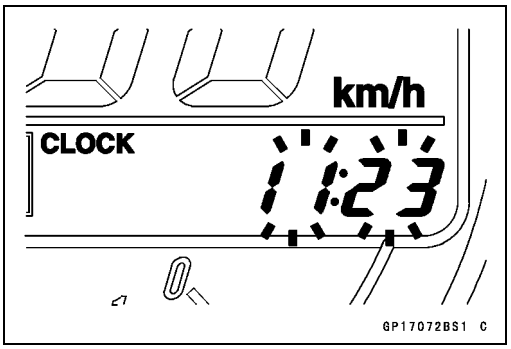

● In the HOUR/MINUTE setting mode, press the reset button [C] again to effect the HOUR setting mode.
○The hour display flashes on the display.
● Press the mode selector button [A] to set the hour.

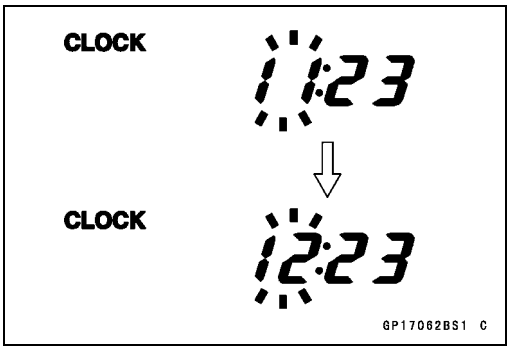

Meter, Gauge, Indicator Unit

- In the HOUR setting mode, press the reset button [C] to effect the MINUTE setting mode.
○The minute display flashes on the display.
- Press the mode selector button [A] to set the minute.

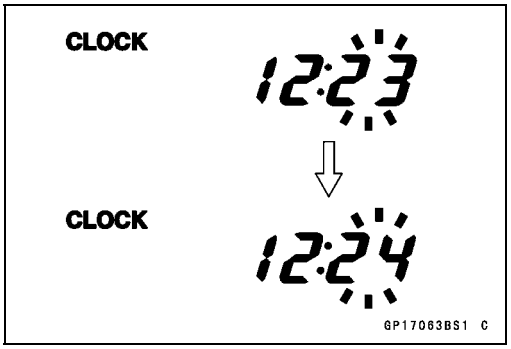

- In the MINUTE setting mode, press the reset button [C] to return to the HOUR/MINUTE setting mode.
- Press the mode selector button [A] to complete the time setting process.
○The clock starts counting the seconds a soon as the mode selector button is pressed.

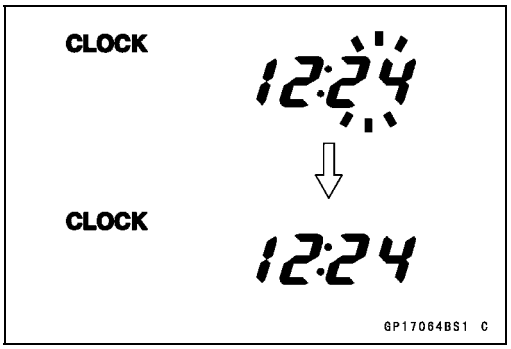

- Indicate the ODO mode.
★If the display function does not work and adjust, replace the meter assembly.
★Check that the display [A] [B] change to the mile and °F, Mile and °C, km and °F, km and °C display each time by pushing the RESET bottom while MODE bottom pushed in.

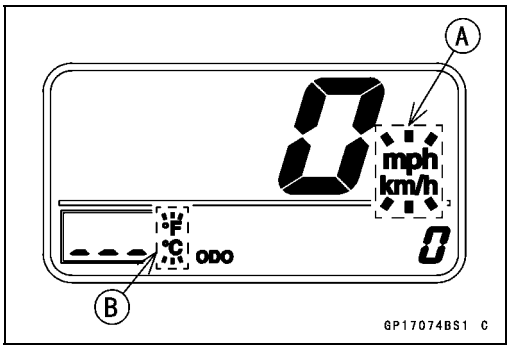

NOTE

○*Mile/Km Display can alternate between English and metric modes (mile and km) in the digital meter. Make sure that km or mile according to local regulations is correctly displayed before riding.*

Speedometer Check:

- Connect the 12 V battery and terminals in the same manner as specified in the "Liquid Crystal Display (LCD) Segments Check".
- The speed equivalent to the input frequency is indicated in the oscillator [A], if the square wave (illustrated as shown) would be input into the terminal [16].
○Indicates approximately 60 mph in case the input frequency would be approximately 146 Hz.
○Indicates approximately 60 km/h in case the input frequency would be approximately 91 Hz.

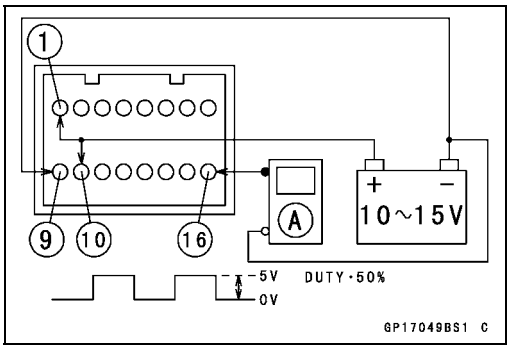

- If the oscillator is not available, the speedometer can be checked as follows.
○Install the meter unit.
○Raise the rear wheel off the ground, using the jack.
○Turn on the ignition switch.
○Rotate the rear wheel by hand.
○Check that the speedometer shows the speed.
★If the speedometer does not work, check the speed sensor electric source voltage and speed sensor.
★The electric source voltage and speed sensor are normal, replace the meter assembly.

Meter, Gauge, Indicator Unit

Speed Sensor Electric Source Check:

- Connect the 12 V battery and terminals in the same manner as specified in the "Liquid Crystal Display (LCD) Segments Check".
- Set the hand tester to the DC25 V range and connect it to the terminals [12] and [9].

★If the voltage is less than 8 V, replace the meter assembly.

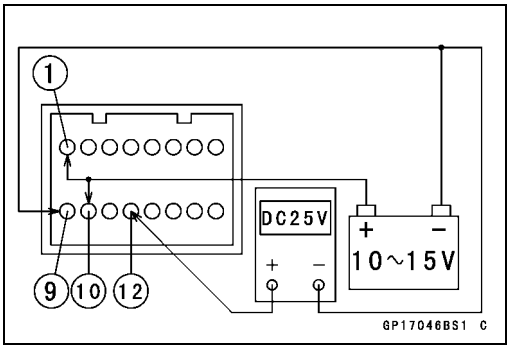

Odometer Check:

- Check the odometer with the speedometer check in the same way.

★If value indicated in the odometer is not added, replace the meter assembly.

NOTE

○*The data is maintained even if the battery is disconnected.*

○*When the figures come to 999999, they are stopped and locked.*

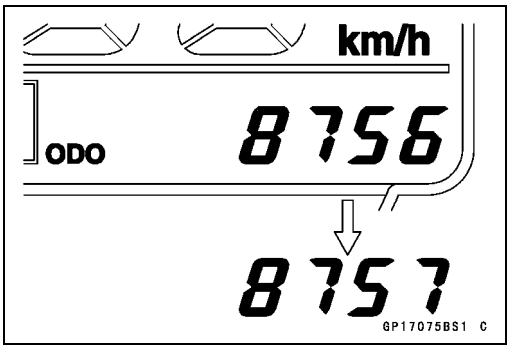

Trip Meter Check:

- Check the trip meter with the speedometer in the same way.

★If value indicated in the trip meter is not added, replace the meter assembly.

- Check that when the RESET button is pushed for more than two seconds, the figure display turns to 0.0.

★If the figure display does not indicate 0.0, replace the meter assembly.

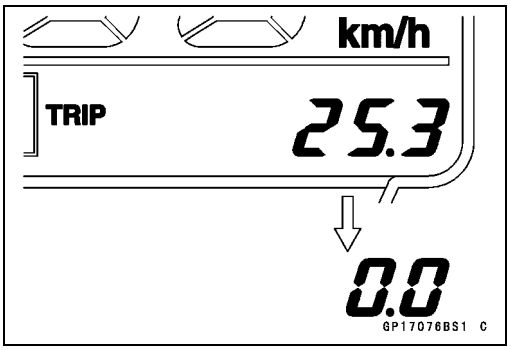

Water Temperature Meter Check:

- Connect the 12 V battery and terminals in the same manner as specified in the "Liquid Crystal Display (LCD) Segments Check".
- Connect the variable rheostat [A] to the terminal [8] as shown.
- Check that the number of segments matches the resistance value of the variable rheostat.

Resistance Value (Ω)	Temperature Meter	Warning Indicate
	–	[A] –
209.8	50°C (122°F)	[B] –
69.1	80°C (176°F)	[B] –
21.2	120°C (248°F)	[C] Flash
17	HI	[D] Flash

- If any display function does not work, replace the meter assembly.

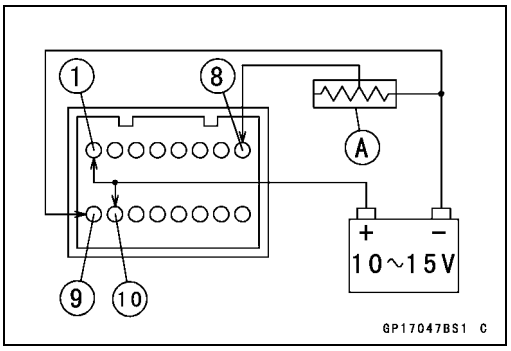

Meter, Gauge, Indicator Unit

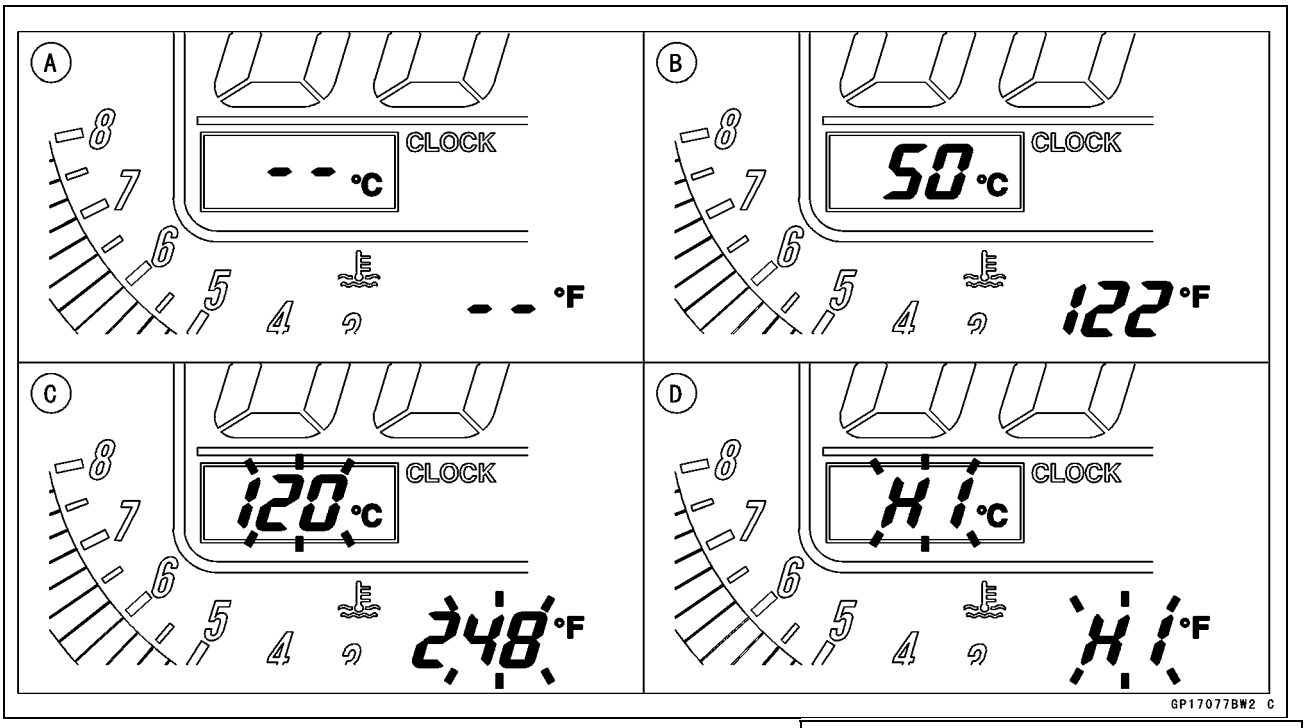

Tachometer Check:

- Connect the 12 V battery and terminals in the same manner as specified in the "Liquid Crystal Display (LCD) Segments Check".
- The revolutions per minute (rpm) equivalent to the input frequency is indicated in the oscillator [A] if the square wave (illustrated as shown) would be input into the terminal [7].

○Indicates approximately 6500 rpm in case the input frequency would be approximately 200 Hz.

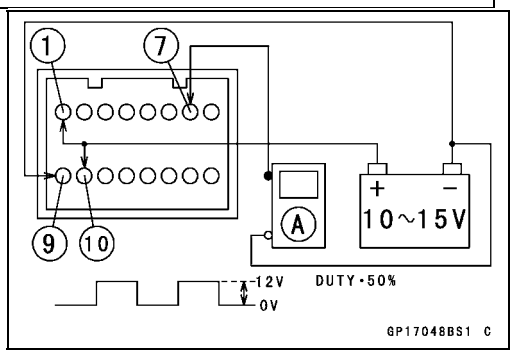

- If the oscillator is not available, the tachometer can be checked as follows.

○Connect the 12 V battery and terminals in the same manner as specified in the "Liquid Crystal Display (LCD) Segments Check".

○Using an auxiliary wire, quickly open and connect the terminal [1] to the terminal [7] repeatedly.

○Then the tachometer segment [A] should flick [B].

★If the hand does not flick, replace the meter assembly.

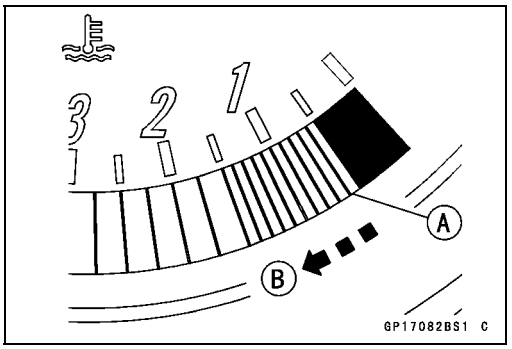

Meter, Gauge, Indicator Unit

Stop Watch Check:

- Connect the 12V battery and terminal in the same manner as specified in the “Liquid Crystal Display (LCD) Segments Check”.
- Press the mode selector button each time to set the stop watch mode.
- Connect the auxiliary wire to the terminal [3] as shown, then stop watch start to count.
- While count the stop watch, connect the auxiliary wire to the terminal [4] as shown, then indicate the counted time during ten seconds.

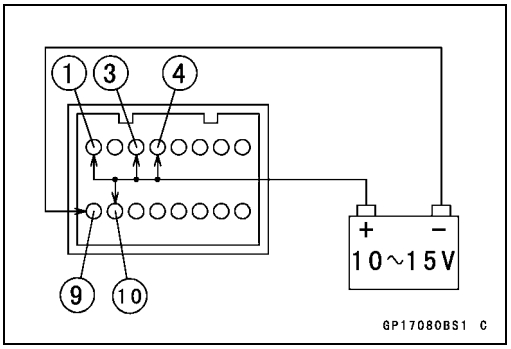

- Connect the variable rheostat [A] to the terminal [8] as shown.
- When Set the resistance to less than 21.1Ω, lap display segment indicate the water temperature.

★If the display function does not work, replace the mater assembly.

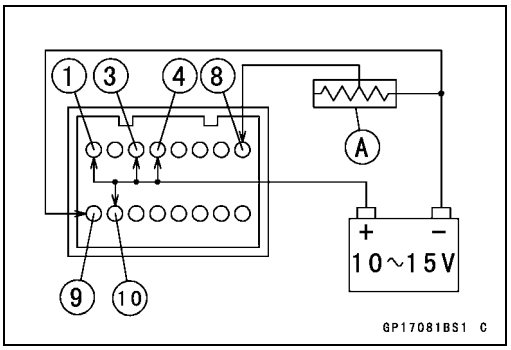

LED Lights Inspection:

- Connect the 12 V battery and terminals in the same manner as specified in the “Liquid Crystal Display (LCD) Segments check.”
  Neutral Indicator Light (LED) [A]
  FI Indicator Light (LED) [B]
  Oil Pressure Warning Indicator Light (LED) [C]
  Turn Signal Indicator Light (LED) [D]
  High Beam Indicator Light (LED) [E]
  Fuel Level Warning Indicator Light (LED) [F]
  Shift Up Indicator Light (LED) [G]

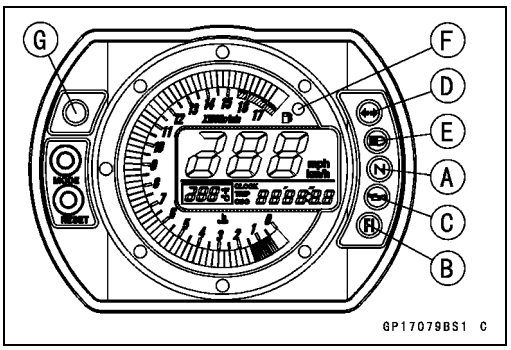

- Using the auxiliary leads and harness adapter, connect a 12 V battery to the meter unit connector as follows.

  Special Tool - Harness Adapter: 57001–1542

Neutral Indicator Light (LED):

Battery Negative (–) Terminal To Terminal [5]

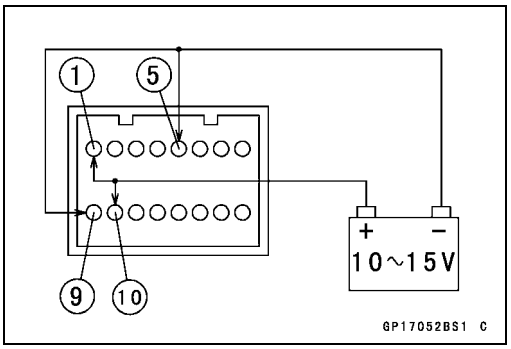

Meter, Gauge, Indicator Unit

FI Indicator Light (LED):
Battery Negative (–) Terminal To Terminal [6]

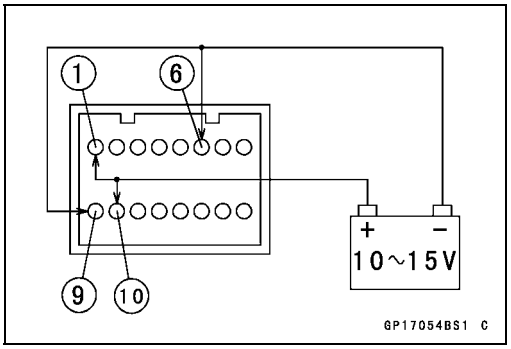

Oil Pressure Warning Indicator Light (LED):
Battery Negative (–) Terminal To Terminal [11]

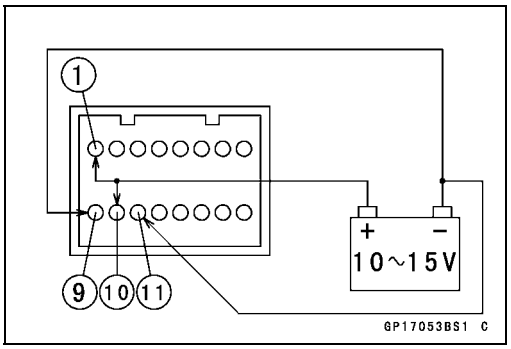

Right and Left Turn Signal Indicator Light (LED):
Battery Positive (+) Terminal to Terminal [13]
Battery Positive (+) Terminal to Terminal [14]

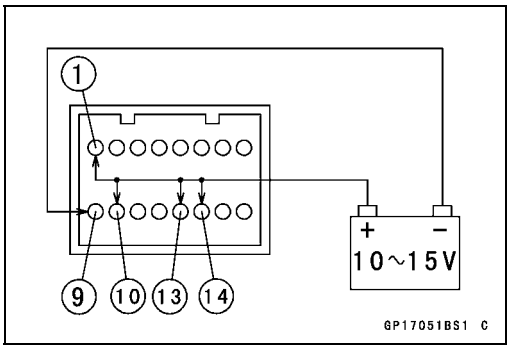

High Beam Indicator Light (LED):
Battery Positive (+) Terminal to Terminal [15]

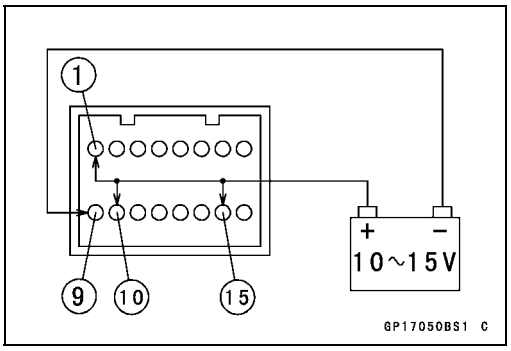

Fuel Level Warning Indicator Light (LED):
- Connect a variable rheostat [C] to terminal [2] and [9] as shown.
- Adjust the resistance value to the approximately 22 Ω.

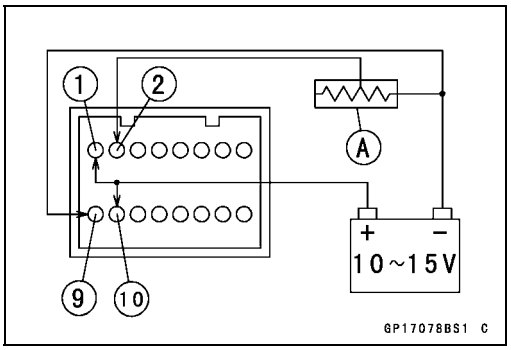

Meter, Gauge, Indicator Unit

Shift Up Indicator Light (LED):

- Connect the 12V battery and terminal in the same manner as specified in the “Liquid Crystal Display (LCD) Segments Check”.
- The revolutions per minute(rpm)equivalent to the input frequency is indicated in the oscillator [A] if the square wave(illustrated as shown) would be input into the terminal [7].
- When set the oscillator more than 440Hz, shift up indicator light(LED) go on.

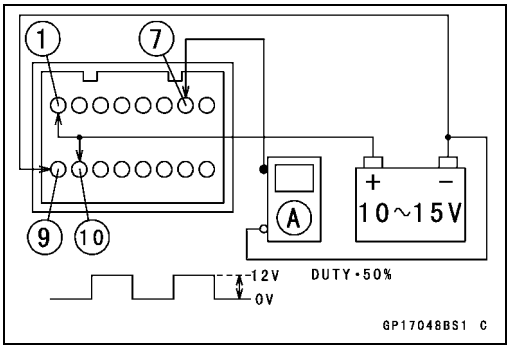

★If each LED lights does not go on, replace the meter assembly.

Meter Circuit

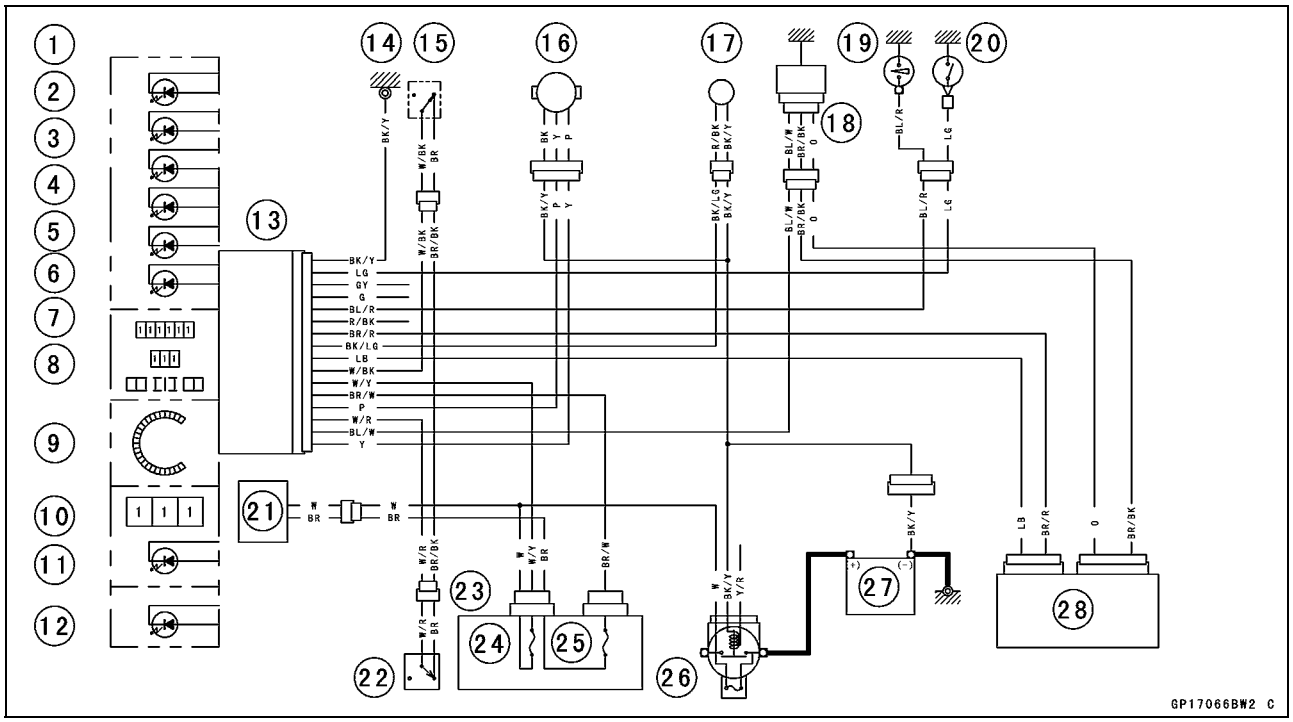

1. Turn Signal Indicator Light (LED)
2. High Beam Indicator Light (LED)
3. Neutral Indicator Light (LED)
4. Oil Pressure Warning Indicator Light (LED)
5. Fuel Level Warning Indicator Light (LED)
6. FI Indicator Light (LED)
7. Odometer/Trip Meter/ Clock/Stop Watch Indicator
8. Water Temperature Gauge
9. Tachometer
10. Speedometer
11. Meter Light (LED)
12. Shift Up Indicator Light (LED)
13. Meter Assembly
14. Frame Ground
15. Stop Watch Switch
16. Speed Sensor
17. Fuel Reserve Switch
18. Water Temperature Sensor
19. Oil Pressure Switch
20. Neutral Switch
21. Ignition Switch
22. Lap Switch
23. Junction Box
24. ACC Fuse 10A
25. Ignition Fuse 10A
26. Main Fuse 30A
27. Battery 12 V 8 Ah
28. E.C.U.

Switches and Sensors

Brake Light Timing Inspection

○Refer to the Brakes in the Periodic Maintenance chapter.

Brake Light Timing Adjustment

○Refer to the Brakes in the Periodic Maintenance chapter.

Switch Inspection

- Using a hand tester, check to see that only the connections shown in the table have continuity (about zero ohms).

○For the handlebar switches and the ignition switch, refer to the tables in the Wiring Diagram.

★If the switch has an open or short, repair it or replace it with a new one.

Special Tool - Hand Tester: 57001–1394

Rear Brake Light Switch Connections

	BR	BL
When brake pedal is pushed down	○——	——○
When brake pedal is released		

Side Stand Switch Connections

	G	BK
When side stand is up	○——	——○
When side stand is down		

Neutral Switch Connections

	SW. Terminal	⏚
When transmission is in neutral	○——	——○
When transmission is not in neutral		

Oil Pressure Switch Connections*

	SW. Terminal	⏚
When engine is stopped	○——	——○
When engine is running		

*: Engine lubrication system is in good condition

Radiator Fan Switch Inspection

- Remove the fan switch (see Cooling System chapter).
- Suspend the switch [A] in a container of coolant so that the temperature-sensing projection and threaded portion are submerged.
- Suspend an accurate thermometer [B] in the coolant.

NOTE

○*The switch and thermometer must not touch the container sides or bottom.*

- Place the container over a source of heat and gradually raise the temperature of the coolant while stirring the coolant gently.
- Using the hand tester, measure the internal resistance of the switch across the terminals at the temperatures shown in the table.

★If the hand tester does not show the specified values, replace the switch.

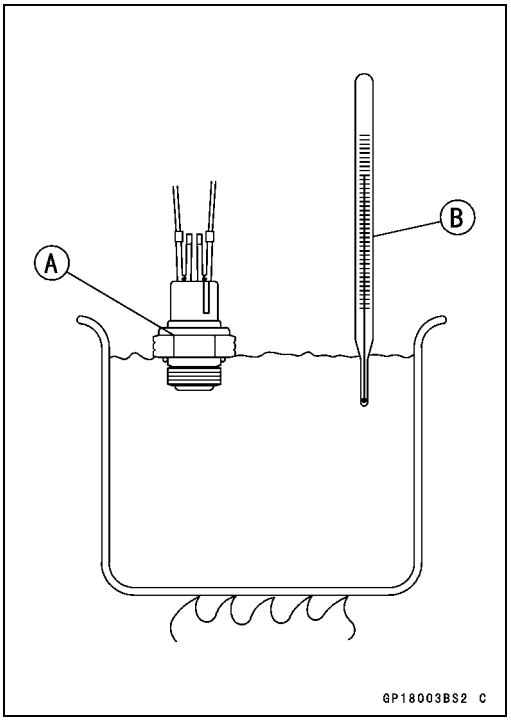

Fan Switch Resistance

Rising temperature:

From OFF to ON at 93 ~ 103°C (199 ~ 217°F)

Falling temperature:

Fan stops with the temperature 3 ~ 8°C (38 ~ 46°F) lower than the operation temperature range.

ON: Less than 0.5 Ω

OFF: More than 10 MΩ

Switches and Sensors

Water Temperature Sensor Inspection

- Remove the water temperature sensor (see Fuel System (DFI) chapter).
- Suspend the sensor [A] in a container of coolant so that the temperature-sensing projection [E] and threaded portion [E] are submerged.
- Suspend an accurate thermometer [B] in the coolant.

NOTE

○*The sensor and thermometer must not touch the container side or bottom.*

- Place the container over a source of heat and gradually raise the temperature of the coolant while stirring the coolant gently.
- Using the hand tester, measure the internal resistance of the sensor.

○The sensor sends electric signals to the ECU (Electronic Control Unit) and coolant temperature gauge in the meter unit.

○Measure the resistance across the terminals and the body (for the gauge) at the temperatures shown in the table.

★If the hand tester does not show the specified values, replace the sensor.

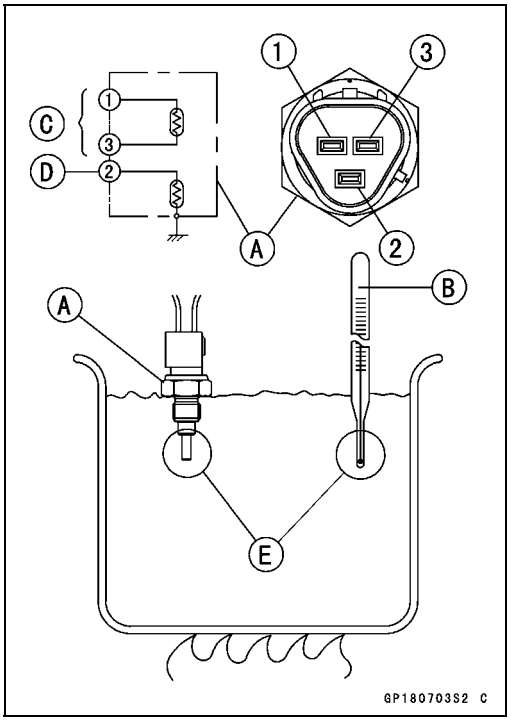

Water Temperature Sensor

Resistance for ECU [C]	
Temperature	Resistance (kΩ) (Terminal [1] - [3])
20°C (68°F)	2.46 $^{+0.115}_{-0.143}$
80°C (176°F)	0.32 ± 0.011
110°C (230°F)	0.1426 ± 0.0041

Resistance for Water Temperature Gauge [D]	
Temperature	Resistance (Ω) (Terminal [2] - Body)
50°C (122°F)	210 ± 40
120°C (248°F)	21.2 ± 1.5

Speed Sensor Removal

- Remove:
  Fuel Tank (see Fuel system (DFI) chapter)
  Reserve Tank [A]
  Speed Sensor Bolt [B]

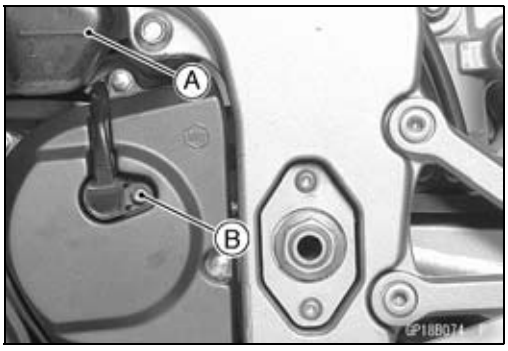

- Disconnect the speed sensor lead connector [A].
- Remove the speed sensor.

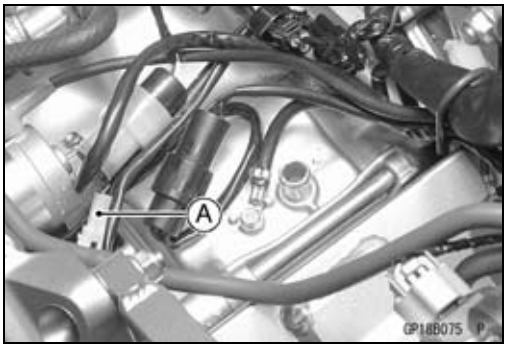

Speed Sensor Installation
- Install the speed sensor.

Torque - Speed Sensor Bolt: 3.9 N·m (0.40 kgf·m, 35 in·lb)

Speed Sensor Inspection
- Remove:
  Speed Sensor (see Final Drive chapter)
- Connect the speed sensor connector [A] with the battery [B], 10 kΩ resistor [C] and hand tester [D] as shown.
- Set the tester to the DC 25 V range.

Special Tool - Hand Tester: 57001–1394

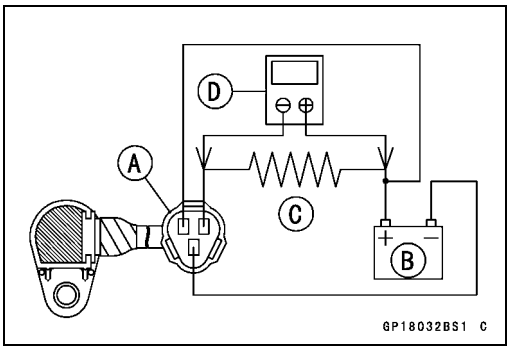

- Trace [A] each side of the speed sensor surface with the screw driver.

○Then the tester indicator should flick [B].

★If the tester indicator does not flick, replace the speed sensor.

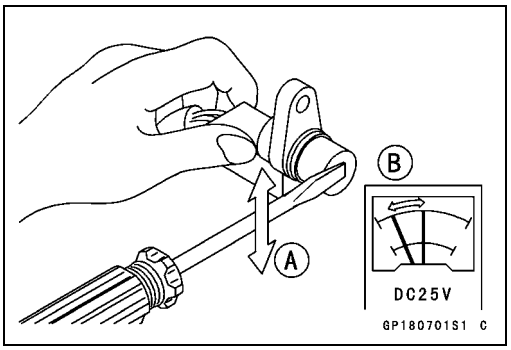

Fuel Reserve Switch Inspection (1)
- Fill the fuel tank with fuel.
- Close the fuel tank cap surely.
- Remove the fuel tank (see Fuel System (DFI) chapter).
- Connect the test light [A] (12 V 3.4 W bulb a socket with leads) and the 12 V battery [B] to the fuel pump connector [C].

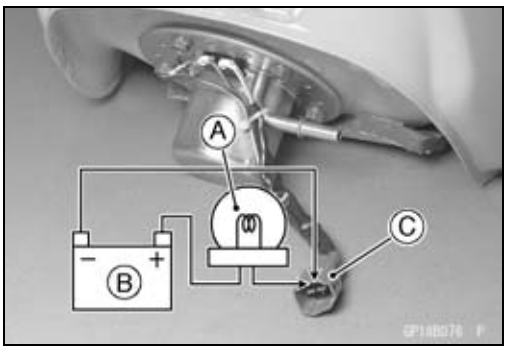

Connections:

Battery (+) → 12 V 3.4 W Bulb (one side)
12 V 3.4 W Bulb (other side) → R/BK Lead Terminal
Battery (–) → BK/W Lead Terminal

Special Tool - Needle Adapter Set: 57001-1457

★If the test light turn on, the reverse switch is defective. Replace the fuel pump.

Switches and Sensors

Fuel Reserve Switch Inspection (2)

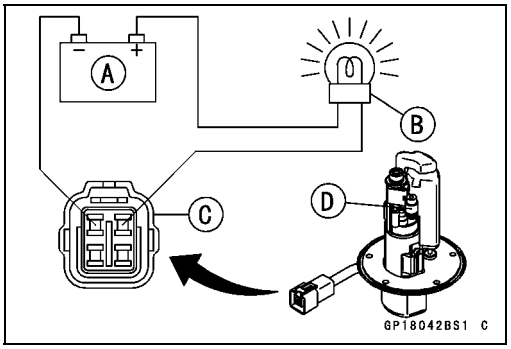

- Remove:
  Fuel Pump (see Fuel System (DFI) chapter)
- Connect the test light (12 V 3.4 W bulb in a socket with leads) and the 12 V battery to the fuel pump connector as shown.
  12 V Battery [A]
  Test Light [B]
  Fuel Pump Connector [C]
  Fuel Reserve Switch [D]

★If the test light doesn't light, replace the fuel pump.

NOTE

○*It may take a long time to turn on the test light in case that the fuel reserve switch is inspected just after the fuel pump is removed. Leave the fuel reserve switch with leads for inspection connected for one (1) minute.*

Junction Box

The junction box [A] has fuses [B], relays, and diodes. The relays and diodes can not be removed.

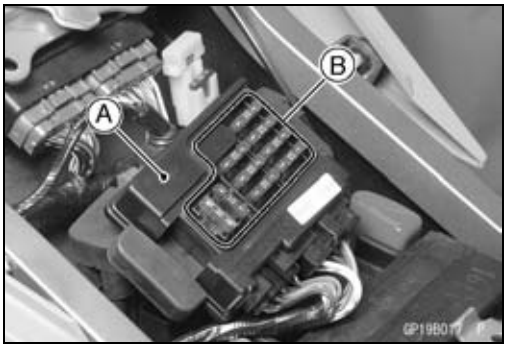

Junction Box Fuse Circuit Inspection

- Remove the seats (see Frame chapter).
- Remove the junction box.
- Pull off the connectors from the junction box.
- Make sure all connector terminals are clean and tight, and none of them have been bent.

★Clean the dirty terminals, and straighten slightly–bent terminals.

- Check conductivity of the numbered terminals with the hand tester.

★If the tester does not read as specified, replace the junction box.

Special Tool - Hand Tester: 57001–1394

Fuse Circuit Inspection

Tester Connection	Tester Reading (Ω)	Tester Connection	Tester Reading (Ω)
1 - 1A	0	1A - 8	∞
1 - 2	0	2 - 8	∞
3A - 4	0	3A - 8	∞
6 - 5	0	6 - 2	∞
6 - 10	0	6 - 3A	∞
6 - 7	0	17 - 3A	∞
6 - 17	0		

Starter Circuit/Headlight Relay Inspection

- Remove the junction box.
- Check conductivity of the following numbered terminals by connecting the hand tester and one 12 V battery to the junction box as shown.

★If the tester does not read as specified, replace the junction box.

Special Tool - Hand Tester: 57001–1394

Junction Box

Relay Circuit Inspection (with the battery disconnected)

	Tester Connection	Tester Reading (Ω)		Tester Connection	Tester Reading (Ω)
Headlight Relay	7 - 8	∞	Starter Circuit Relay	9 - 11	∞
	7 - 13	∞		12 - 13	∞
	(+) (-) 13 - 9	Not ∞ *		(+) (-) 13 - 11	∞
				(+) (-) 12 - 11	Not ∞ *

(*): The actual reading varies with the hand tester used.
(+): Apply tester positive lead.
(–): Apply tester negative lead.

Relay Circuit Inspection (with the battery connected)

	Battery Connection (+) (–)	Tester Connection	Tester Reading (Ω)
Headlight Relay	9 – 13	7 – 8	0
Starter Circuit Relay	11 – 12	(+) (–) 13 – 11	Not ∞ *

(*): The actual reading varies with the hand tester used.
(+): Apply tester positive lead.
(–): Apply tester negative lead.

Diode Circuit Inspection

- Remove the junction box.
- Check conductivity of the following pairs of terminals.

Diode Circuit Inspection

Tester Connection	13–8, 13–9, 12–11, 12–14, 15–14, 16–14

★The resistance should be low in one direction and more than ten times as much in the other direction. If any diode shows low or high in both directions, the diode is defective and the junction box must be replaced.

NOTE

○*The actual meter reading varies with the meter used and the individual diodes, but, generally speaking, the lower reading should be from zero to one half the scale.*

Junction Box

Junction Box Internal Circuit

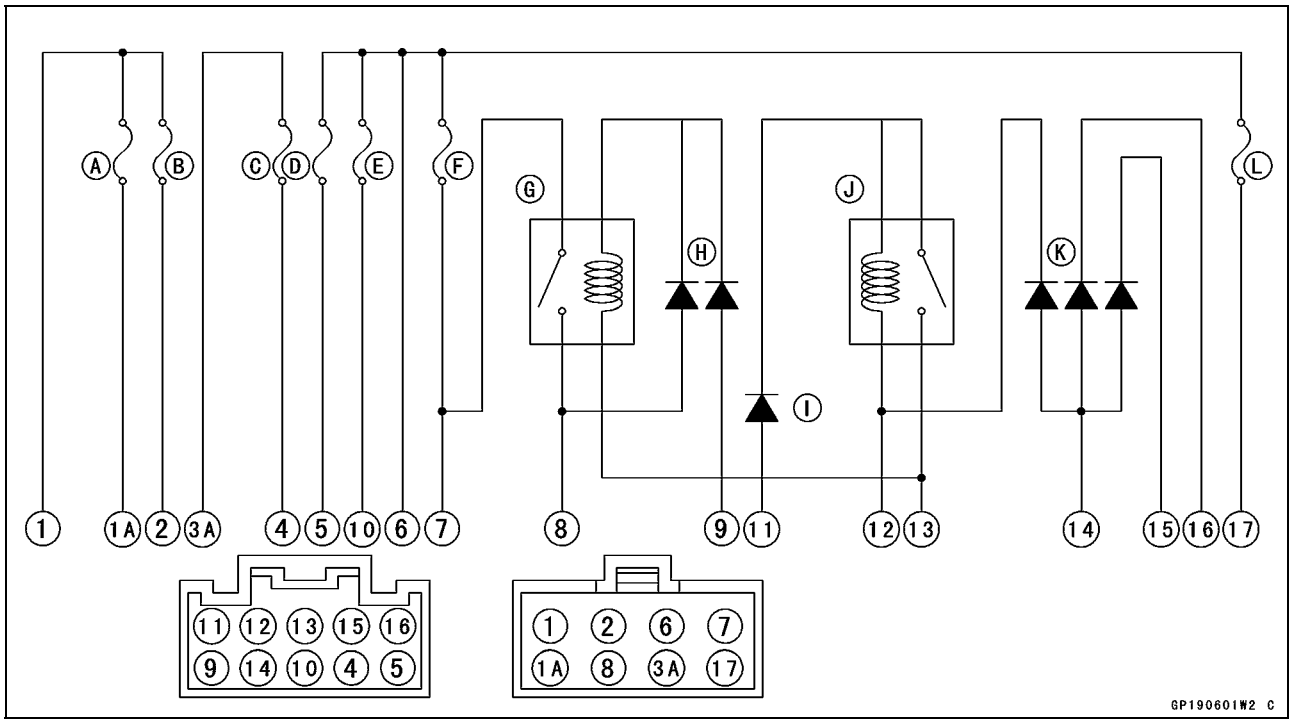

A. Accessory Fuse 10 A
B. Fan Fuse 10 A
C. Turn Signal Relay Fuse 10 A
D. Horn Fuse 10 A
E. Ignition Fuse 10 A
F. Headlight Fuse 10 A
G. Headlight Relay
H. Headlight Diodes
I. Starter Diode
J. Starter Circuit Relay
K. Interlock Diodes
L. Taillight Fuse 10 A

Fuse

30 A Main Fuse Removal

- Remove:
  Seats (see Frame chapter)
  Starter Relay and 30 A Main Fuse Connector [A]
- Pull out the main fuse [B] from the starter relay with needle nose pliers.

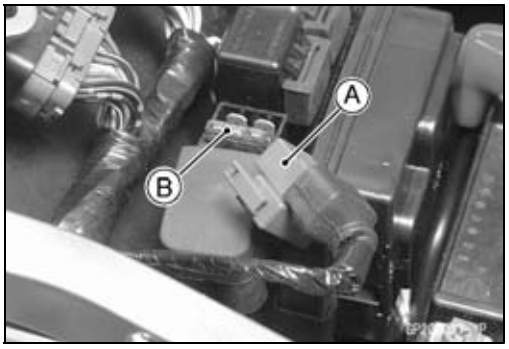

Junction Box Fuse Removal

- Remove the seats (see Frame chapter).
- Unlock the hook to lift up the lid [A].
- Pull the fuses [B] straight out of the junction box with needle nose pliers.

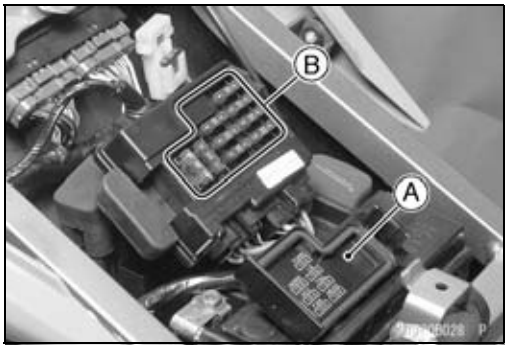

15A ECU Fuse Removal

- Remove:
  Seats (see Frame chapter)
  15A ECU Fuse [A]

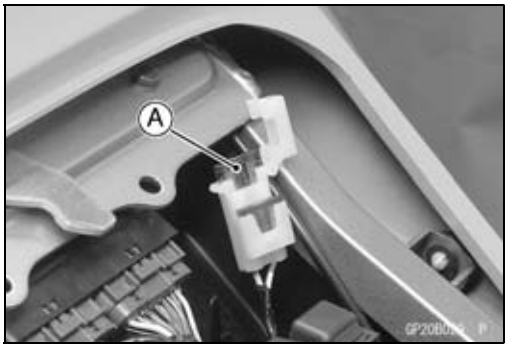

Fuse Installation

- If a fuse fails during operation, inspect the electrical system to determine the cause, and then replace it with a new fuse of proper amperage.
- Install the junction box fuses on the original position as specified on the lid.

Fuse Inspection

- Remove the fuse (see Fuse Removal).
- Inspect the fuse element.

★If it is blown out, replace the fuse. Before replacing a blown fuse, always check the amperage in the affected circuit. If the amperage is equal to or greater than the fuse rating, check the wiring and related components for a short circuit.

Housing [A]	Terminals [C]
Fuse Element [B]	Blown Element [D]

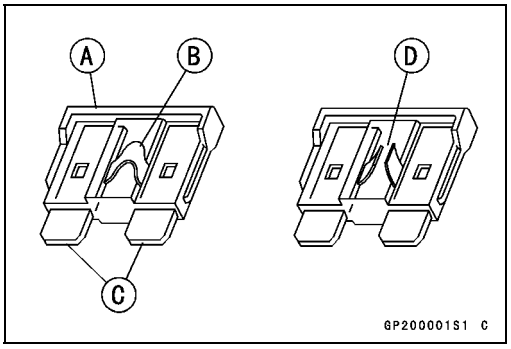

CAUTION

When replacing a fuse, be sure the new fuse matches the specified fuse rating for that circuit. Installation of a fuse with a higher rating may cause damage to wiring and components.

Appendix

Table of Contents

Cable, Wire, and Hose Routing 17-2
Troubleshooting Guide 17-12

Cable, Wire, and Hose Routing

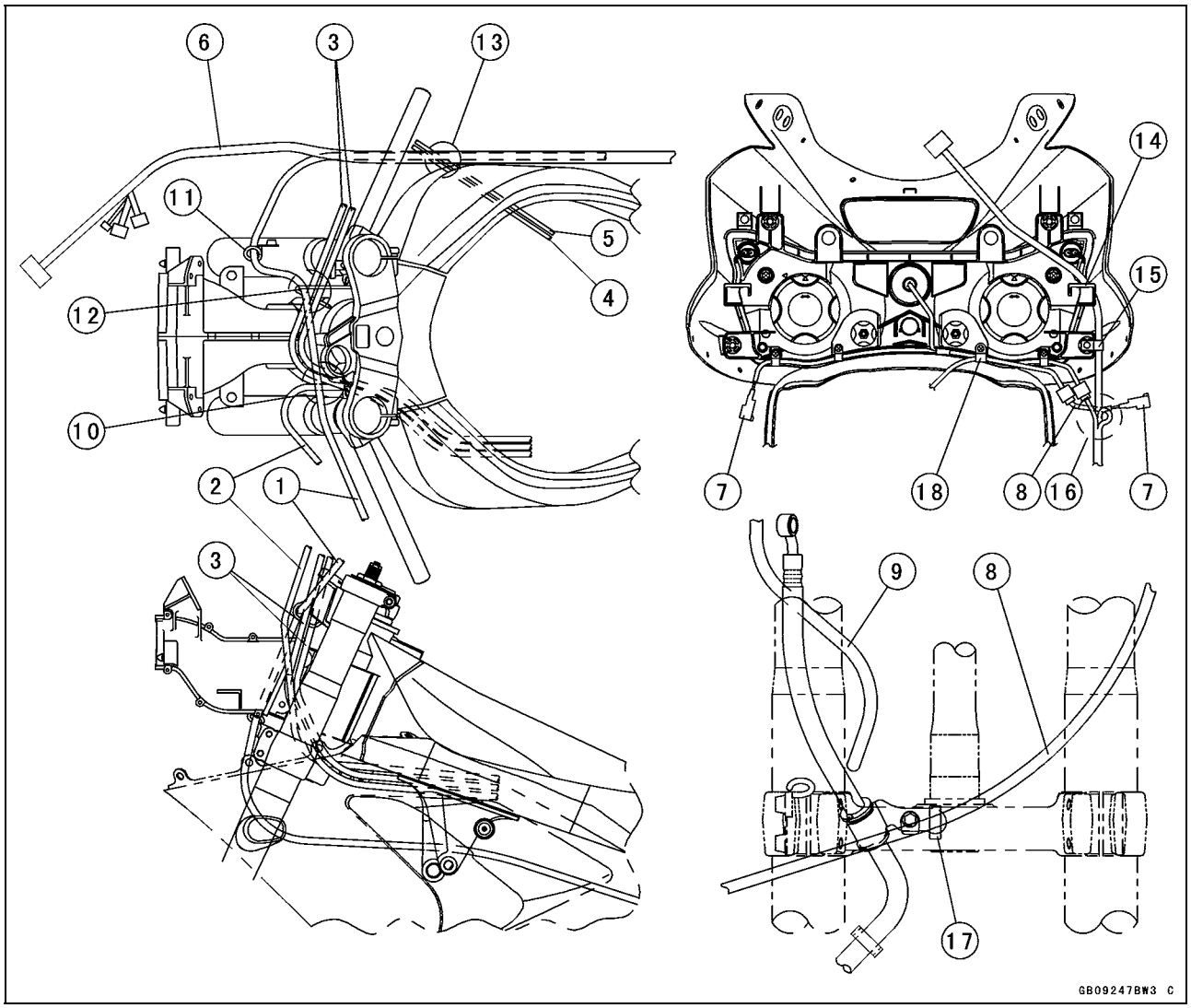

1. Clucth Cable
2. Choke Cable
3. Throttle Cables
4. Coolant Reserve Tank Hose
5. Coolant By-pass Hose
6. Main Harness
7. Turn Signal Light Lead
8. Left Handlebar Switch Lead
9. Right Handlebar Switch Lead
10. Run the starter cable under the throttle cables and clutch cable.
11. Run the clutch cable and through the clamp.
12. Clamp the throttle cables and clutch cable and run the clutch cable above the throttle cables.
13. Run the clutch cable above the coolant hose and through the main harness inside.
14. Run the meter lead forward the bracket.
15. Clamp the meter lead.
16. Run the left handlebar switch lead under the main harness.
17. Clamp the left handlebar switch lead.
18. Clamp the headlight lead and the left handlebar switch lead.

Cable, Wire, and Hose Routing

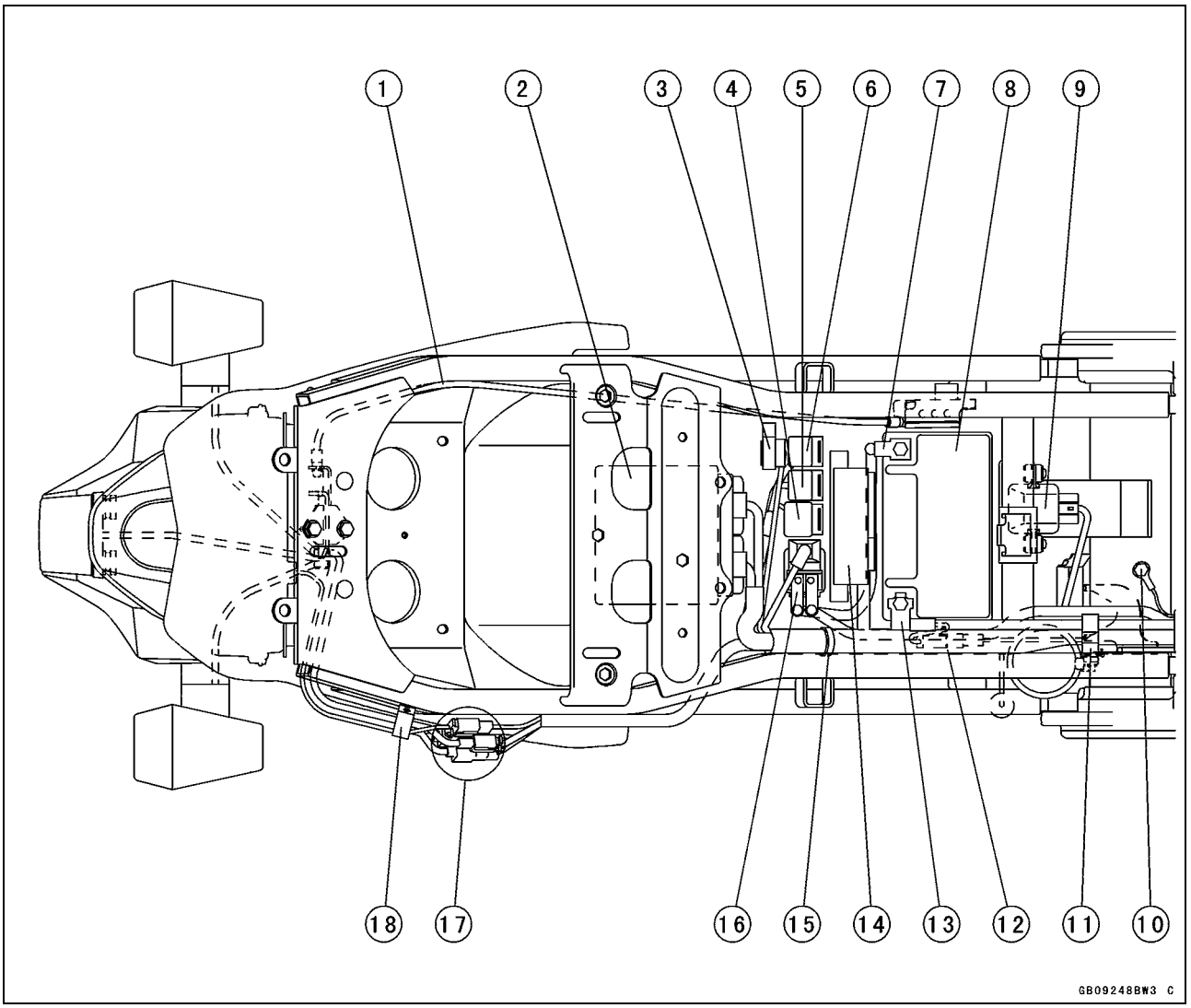

1. Seat Lock Cable
2. ECU (Electrical Control Unit)
3. ECU Fuse15A
4. Turn Signal Relay
5. Fuel Pump Relay
6. ECU Main Relay
7. Battery (+) Lead
8. Battery
9. Vehicle-down Sensor
10. Frame Ground
11. Clamp
12. Self-diagnosis Terminal
13. Battery (-) Lead
14. Junction Box
15. Clamp
16. Starter Relay and Main Fuse30A
17. Turn Signal Light Lead Connector(Left and Right), License Light Lead Connector and Tail/Brake Light(LED) Lead Connector
18. Clamp

Cable, Wire, and Hose Routing

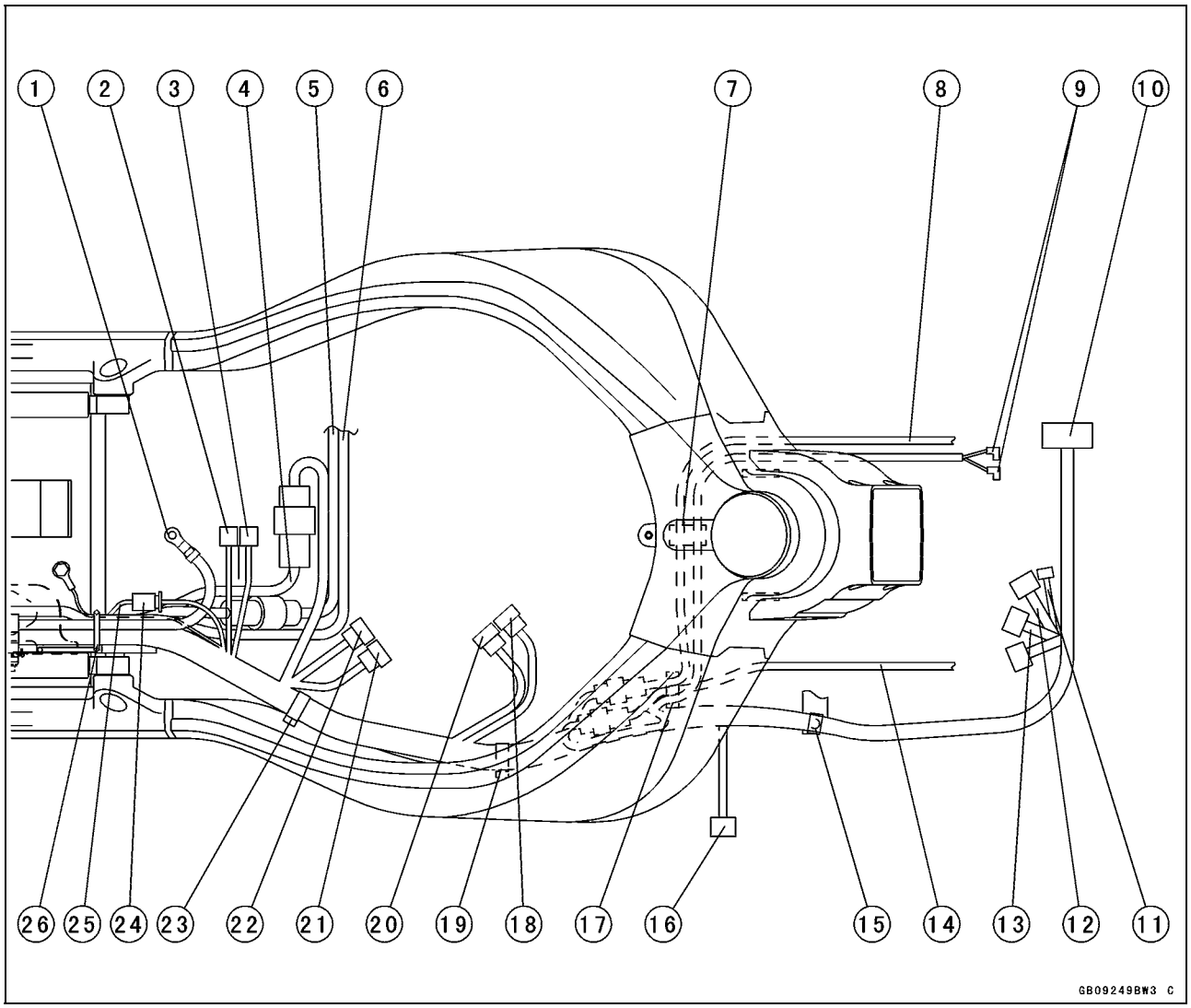

1. Engine Ground
2. To Side Stand Switch/Neutral Switch, etc
3. To Speed Sensor
4. Regulator/Rectifire Lead
5. To Regulator/Rectifire
6. To Starter Motor
7. Clamp the ignition switch lead and horn lead.
8. Run the ignition switch lead above the choke cable and throttle cables.
9. Horn Lead
10. To Meter Assembly
11. To Turn Signal Lead
12. To Headlight
13. To Left Handlebar Switch
14. Right Handlebar Switch Lead
15. Clamp
16. To Camshaft Position Sensor
17. Clamp the horn lead, ignition switch lead and right handlebar switch lead.
18. To Ignition Switch
19. Clamp
20. Inlet Air Temperature Switch
21. To Injector
22. To Fuel Pump
23. Clamp
24. Place the brake switch connector forward than rear brake reservoir bracket.
25. Rear Brake Switch Lead
26. Clamp the main harness, rear brake switch, regulator/rectifier lead, battery (–) lead and starter motor lead.

Cable, Wire, and Hose Routing

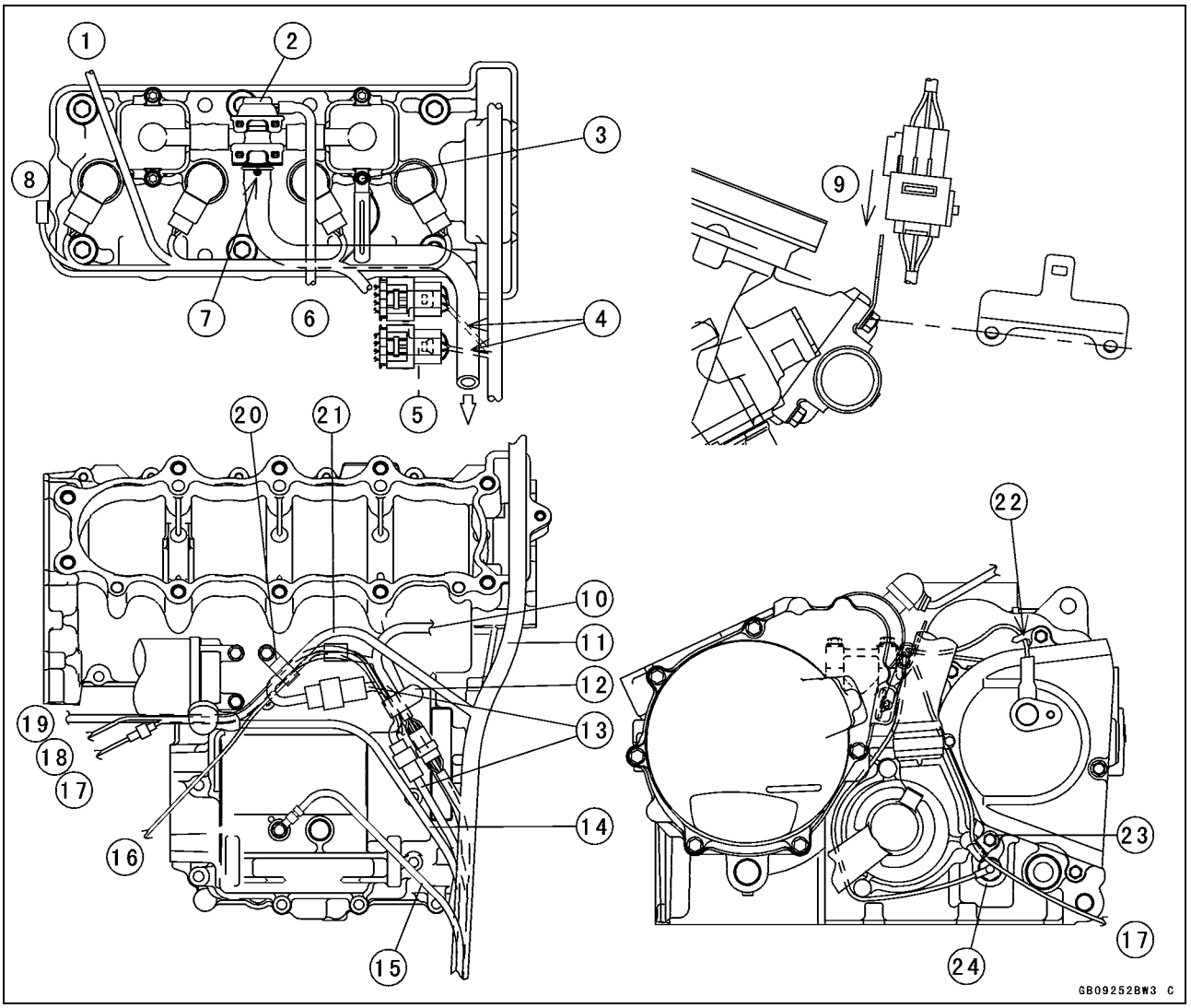

1. To Air Radiator Fan Switch
2. Vacuum Switch Valve
3. Tighten with the ground lead and clamp.
4. Run the subthrottle lead under the vacuum switch hose.
5. Insert the connectors to the plate.
6. From the Throttle Body Assembly
7. Face the white mark upward.
8. To Radiator Fan.
9. Insert the connector to the plate.
10. To Oil Pressure Switch
11. Main Harness
12. Clamp
13. Regulator/Rectifire Lead
14. Starter Motor Lead
15. Battery (-) Lead
16. To Speed Sensor
17. To Side Stand Switch
18. To Neutral Switch
19. To Alternator
20. Clamp
21. Starter Motor Lead
22. Run the speed sensor lead inside the engine sprocket cover hook.
23. Clamp the side stand switch lead.
24. Neutral Switch

Cable, Wire, and Hose Routing

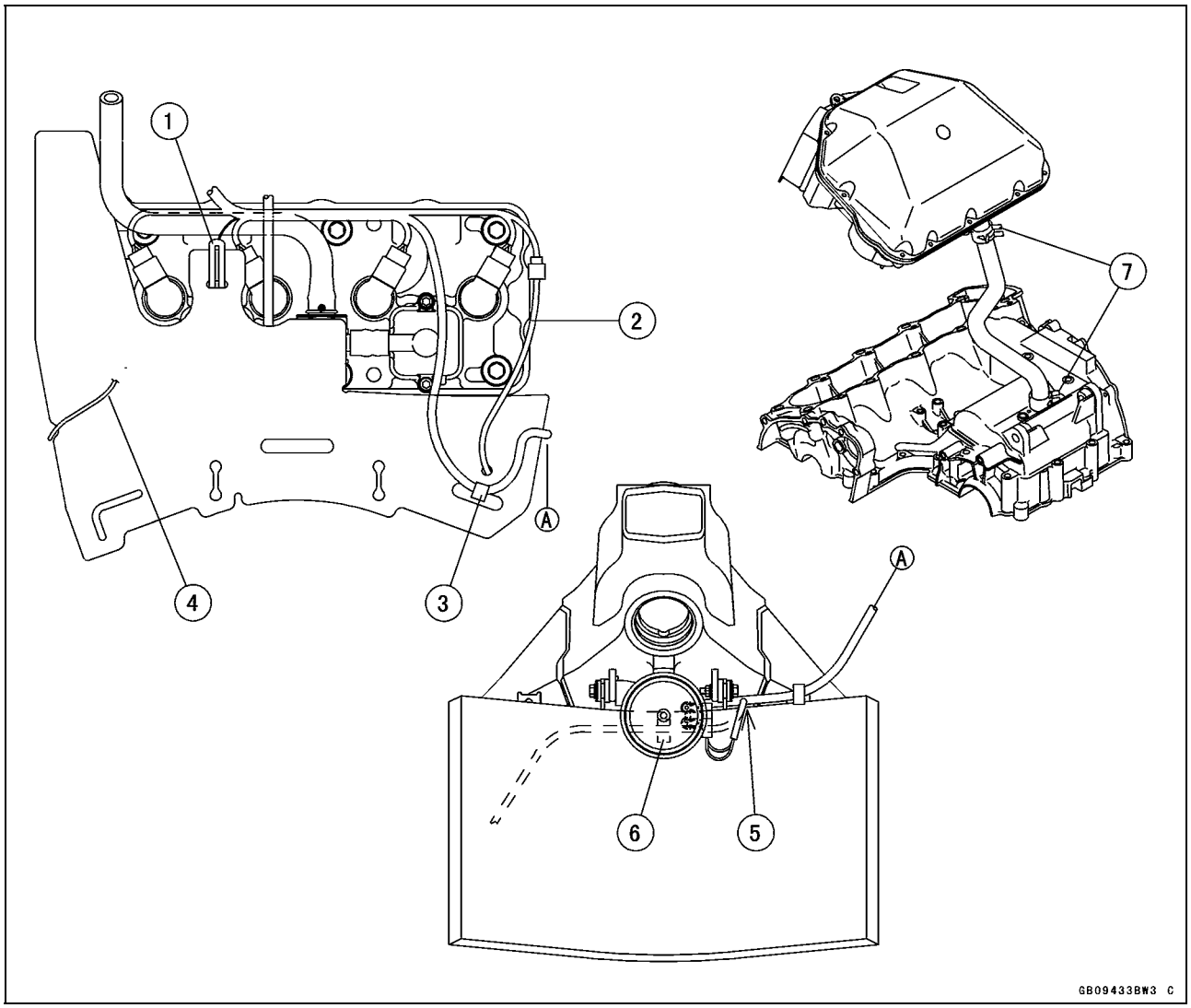

1. Through the clamp to the rubber cover hole, and bend it for hold the rubber cover.
2. Radiator Fan Lead
3. Clamp the radiator fan switch lead.
4. Camshaft Position lead
5. Through the horn lead outside the bracket of radiator upside, and through it between frame and radiator.
6. Clamp the ignition switch lead and horn lead.
7. Clamps the pinch portion to right side.

Cable, Wire, and Hose Routing

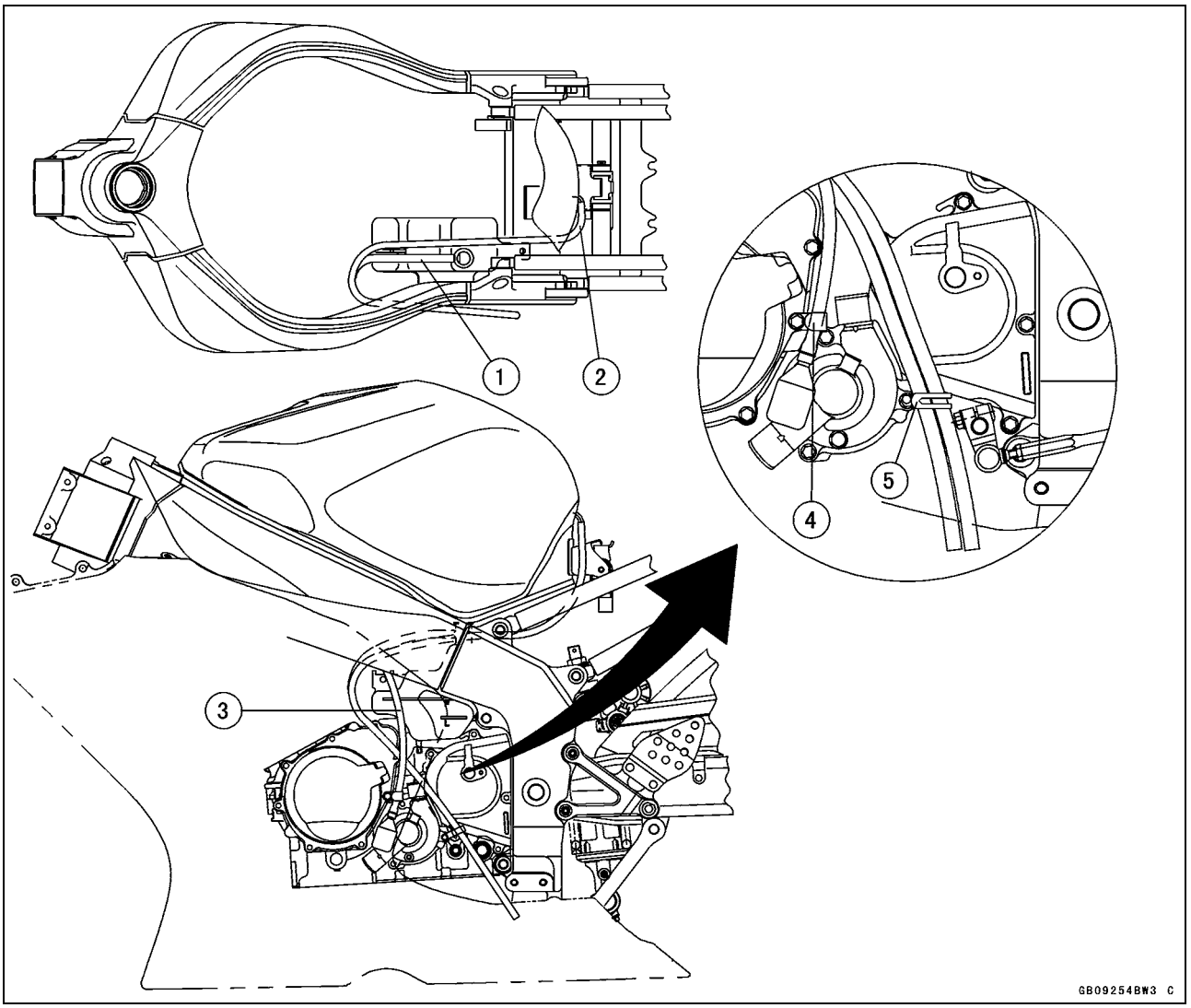

1. Reserve Tank Overflow Hose
2. Fuel Tank Drain Hose
3. Air Cleaner Housing Drain Hose
4. Clamp the air cleaner housing drain hose.
5. Clamp the reserve tank overflow hose and fuel tank drain hose.

Cable, Wire, and Hose Routing

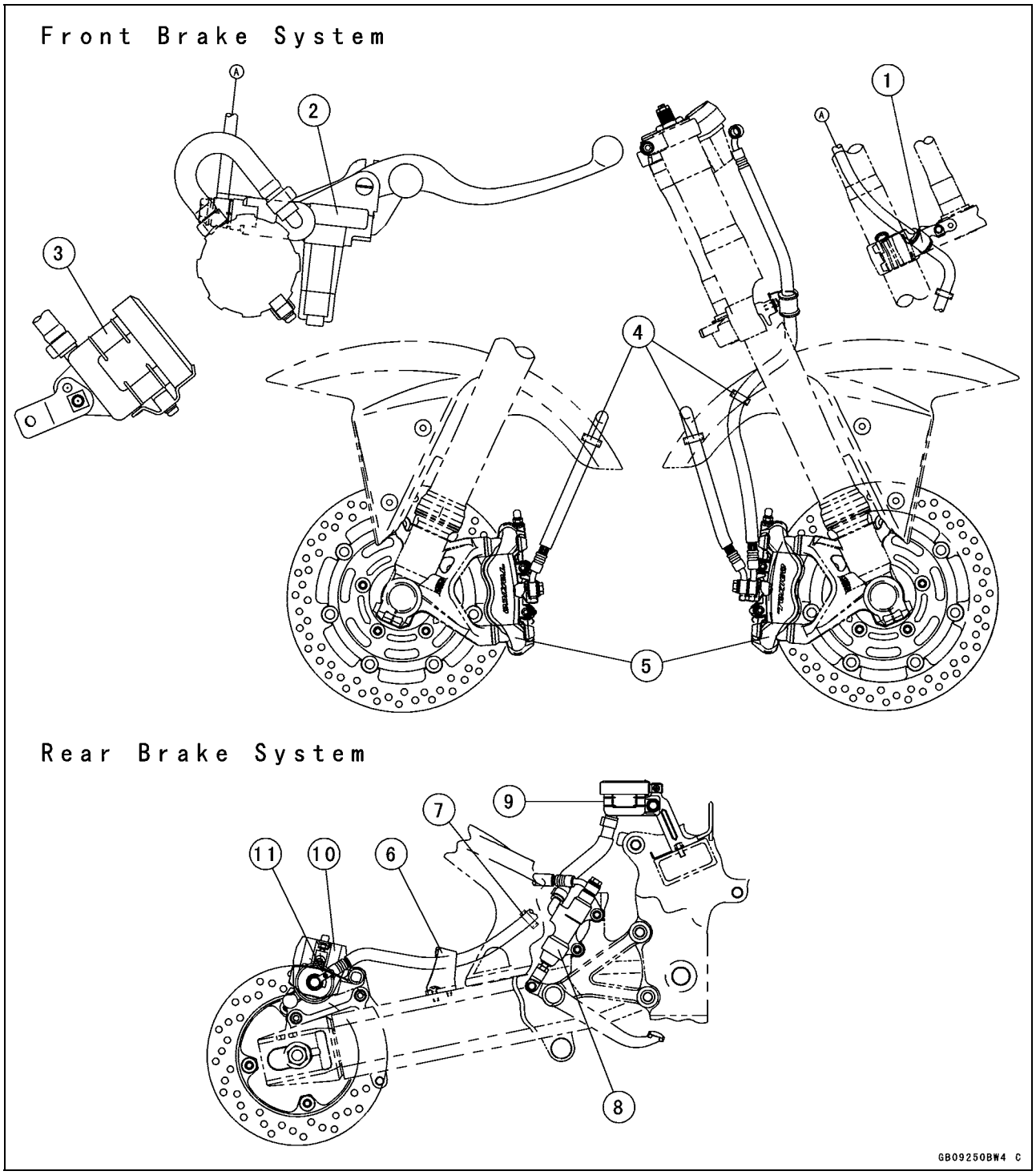

1. Brake Hose Clamp
2. Front Master Cylinder
3. Front Brake Reservoir Tank
4. Clamp (Installed to the front fender)
5. Front Brake Caliper
6. Clamp
7. Clamp (Installed to the inner fender)
8. Rear Brake Master Cylinder
9. Rear Brake Reservoir Tank
10. Rear Brake Caliper
11. The brake hose shall be installed so that the white mark on it faces to outside.

Cable, Wire, and Hose Routing

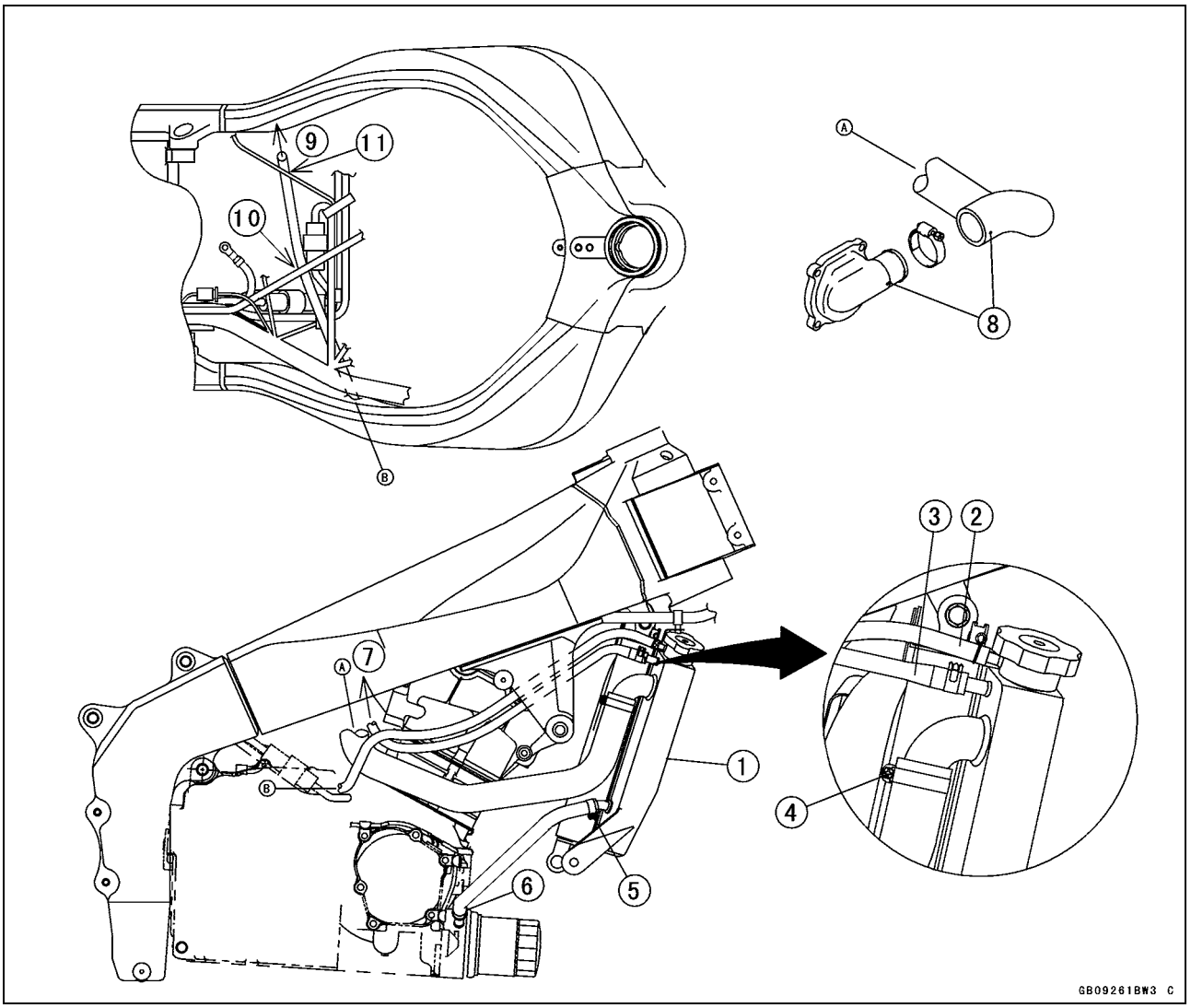

1. Radiator
2. Reserve Tank Hose
3. Coolant By-pass Hose
4. Face the clamp screw rear and approximately 30° inside.
5. Face the clamp screw downward.
6. Face the white mark forward.
7. To Cylinder Head Fitting
8. Align the mark.
9. To Reserve Tank
10. Run the reserve tank hose under the starter motor lead.
11. Run the reserve tank hose under the speed sensor lead.

Cable, Wire, and Hose Routing

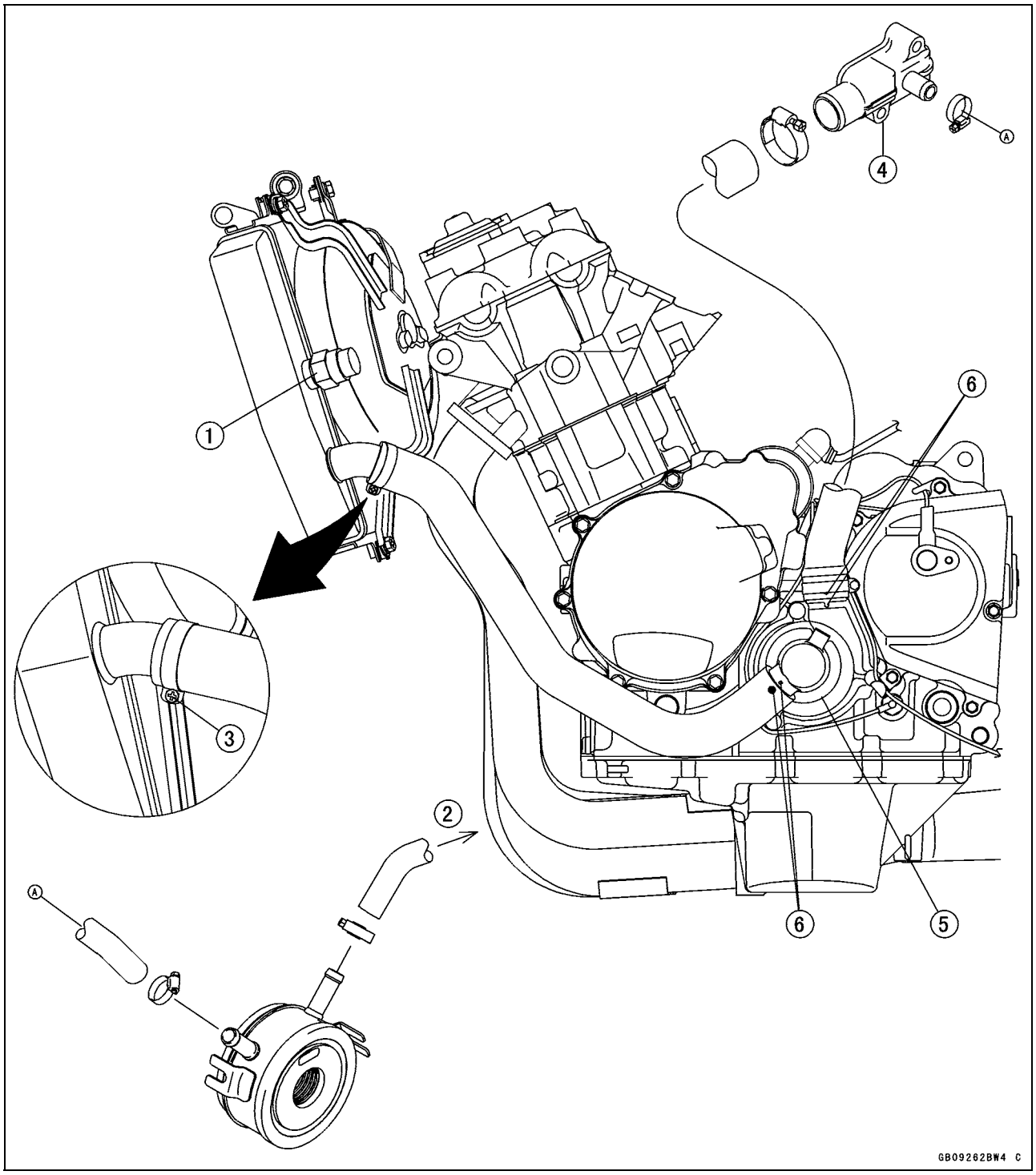

1. Radiator Fan Switch
2. To Radiator
3. Face the clamp screw downward.
4. Cylinder Fitting.
5. Water Pump.
6. Align the mark.

Cable, Wire, and Hose Routing

California Evaporative Emission Control System

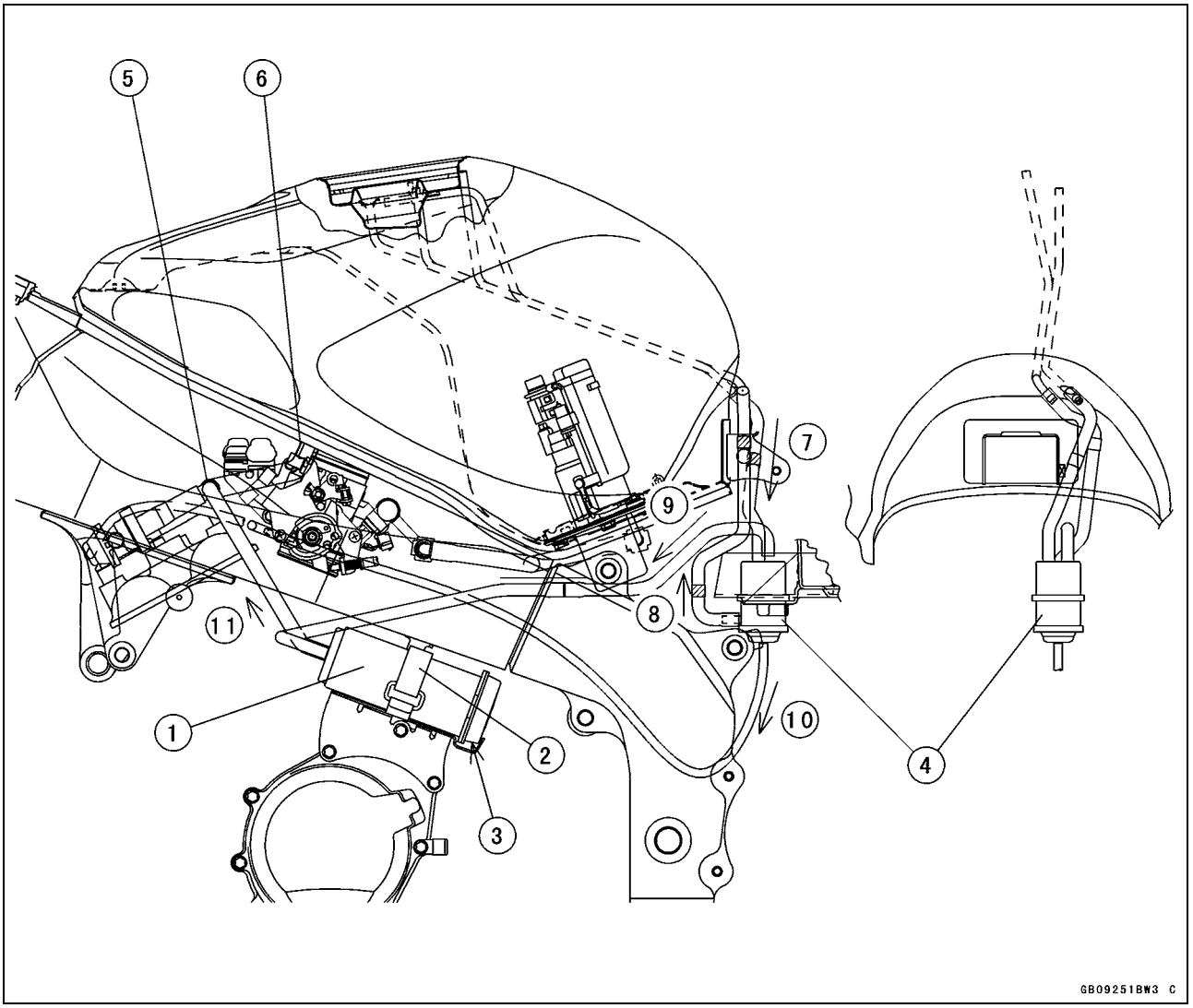

1. Canister
2. Band
3. Face the hole downward.
4. Separator
5. Fitting
6. Face the claw outside.
7. To Separator (Blue)
8. To Fuel Tank (Red)
9. To Canister (Blue)
10. To Throttle Body #4 (white)
11. To Vacuum Switch(Green)

Troubleshooting Guide

NOTE

○*Refer to the Fuel System chapter for most of DFI trouble shooting guide.*

○*This is not an exhaustive list, giving every possible cause for each problem listed. It is meant simply as a rough guide to assist the troubleshooting for some of the more common difficulties.*

Engine Doesn't Start, Starting Difficulty:

Starter motor not rotating:
- Starter lockout switch or neutral switch trouble
- Starter motor trouble
- Battery voltage low
- Starter relay not contacting or operating
- Starter button not contacting
- Wiring open or shorted
- Ignition switch trouble
- Engine stop switch trouble
- Fuse blown

Starter motor rotating but engine doesn't turn over:
- Starter clutch trouble
- Vehicle-down sensor (DFI) coming off

Engine won't turn over:
- Valve seizure
- Valve lifter seizure
- Cylinder, piston seizure
- Crankshaft seizure
- Connecting rod small end seizure
- Connecting rod big end seizure
- Transmission gear or bearing seizure
- Camshaft seizure
- Starter idle gear seizure

No fuel flow:
- No fuel in tank
- Fuel pump trouble
- Fuel tank air vent obstructed
- Fuel filter clogged
- Fuel line clogged

Engine flooded:
- Clean spark plug and adjust plug gap
- Starting technique faulty
- (When flooded, do not crank the engine with the throttle fully opened. This promotes engine flood because more fuel is supplied automatically by DFI.)

No spark; spark weak:
- Vehicle-down sensor (DFI) coming off
- Ignition switch not ON
- Engine stop switch turned OFF
- Clutch lever not pulled in or gear not in neutral
- Battery voltage low
- Spark plug dirty, broken, or gap maladjusted
- Stick coil shorted or not in good contact
- Stick coil trouble
- Spark plug incorrect
- IC igniter in ECU trouble
- Camshaft position sensor trouble
- Neutral, starter lockout, or side stand switch trouble
- Crankshaft sensor trouble
- Ignition switch or engine stop switch shorted
- Wiring shorted or open
- Fuse blown

Fuel/air mixture incorrect:
- Bypass screw and/or idle adjusting screw maladjusted
- Air passage clogged
- Air cleaner clogged, poorly sealed, or missing

Compression Low:
- Spark plug loose
- Cylinder head not sufficiently tightened down
- No valve clearance
- Cylinder, piston worn
- Piston ring bad (worn, weak, broken, or sticking)
- Piston ring/groove clearance excessive
- Cylinder head gasket damaged
- Cylinder head warped
- Valve spring broken or weak
- Valve not seating properly (valve bent, worn, or carbon accumulation on the seating surface)

Poor Running at Low Speed:

Spark weak:
- Battery voltage low
- Spark plug dirty, broken, or maladjusted
- Stick coil wiring trouble
- Stick coil not in good contact
- Spark plug incorrect
- IC igniter in ECU trouble
- Camshaft position sensor trouble
- Crankshaft sensor trouble
- Stick coil trouble

Fuel/air mixture incorrect:
- Bypass screw maladjusted
- Air passage clogged
- Air bleed pipe bleed holes clogged
- Pilot passage clogged
- Air cleaner clogged, poorly sealed, or missing
- Fuel tank air vent obstracted
- Fuel pump trouble
- Throttle body assy holder loose

Troubleshooting Guide

Air cleaner duct loose

Compression low:

Spark plug loose
Cylinder head not sufficiently tightened down
No valve clearance
Cylinder, piston worn
Piston ring bad (worn, weak, broken, or sticking)
Piston ring/groove clearance excessive
Cylinder head warped
Cylinder head gasket damaged
Valve spring broken or weak
Valve not seating properly (valve bent, worn, or carbon accumulation on the seating surface)

Other:

IC igniter in ECU trouble
Throttle body assy not synchronizing
Engine oil viscosity too high
Drive train trouble
Brake dragging
Air suction valve trouble
Vacuum switch valve trouble
Engine overheating
Clutch slipping

Poor Running or No Power at High Speed:

Firing incorrect:

Spark plug dirty, broken, or maladjusted
Stick coil wiring trouble
Stick coil not in good contact
Spark plug incorrect
Camshaft postion trouble
IC igniter in ECU trouble
Crankshaft sensor trouble
Stick coil trouble

Fuel/air mixture incorrect:

Air cleaner clogged, poorly sealed, or missing
Air cleaner O-ring damaged
Air cleaner duct loose
Water or foreign matter in fuel
Throttle body assy holder loose
Fuel to injector insufficient (DFI)
Fuel tank air vent obstructed
Fuel line clogged
Fuel pump trouble (DFI)

Compression low:

Spark plug loose
Cylinder head not sufficiently tightened down
No valve clearance
Cylinder, piston worn
Piston ring bad (worn, weak, broken, or sticking)
Piston ring/groove clearance excessive
Cylinder head gasket damaged
Cylinder head warped
Valve spring broken or weak
Valve not seating properly (valve bent, worn, or carbon accumulation on the seating surface.)

Knocking:

Carbon built up in combustion chamber
Fuel poor quality or incorrect
Spark plug incorrect
IC igniter in ECU trouble
Camshaft position sensor trouble
Crankshaft sensor trouble

Miscellaneous:

Throttle valve won't fully open
Brake dragging
Clutch slipping
Engine overheating
Engine oil level too high
Engine oil viscosity too high
Drive train trouble
Air suction valve trouble
Vacuum switch valve trouble
Catalytic converter melt down due to muffler overheating (KLEEN)

Overheating:

Firing incorrect:

Spark plug dirty, broken, or maladjusted
Spark plug incorrect
IC igniter in ECU trouble

Muffler overheating:

For KLEEN, do not run the engine even if with only one cylinder misfiring or poor running (Request the nearest service facility to correct it)
For KLEEN, do not push-start with a dead battery (Connect another full-charged battery with jumper cables, and start the engine using the electric starter)
For KLEEN, do not start the engine under misfire due to spark plug fouling or poor connection of the stick coil
For KLEEN, do not coast the motorcycle with the ignition switch off (Turn the ignition switch ON and run the engine)
IC igniter in ECU trouble

Fuel/air mixture incorrect:

Throttle body assy holder loose
Air cleaner duct loose
Air cleaner poorly sealed, or missing
Air cleaner O-ring damaged
Air cleaner clogged

Compression high:

Carbon built up in combustion chamber

Troubleshooting Guide

Engine load faulty:
- Clutch slipping
- Engine oil level too high
- Engine oil viscosity too high
- Drive train trouble
- Brake dragging

Lubrication inadequate:
- Engine oil level too low
- Engine oil poor quality or incorrect

Oil cooler incorrect:
- Oil cooler clogged

Gauge incorrect:
- Water temperature gauge broken
- Water temperature sensor broken

Coolant incorrect:
- Coolant level too low
- Coolant deteriorated
- Wrong coolant mixed ratio

Cooling system component incorrect:
- Radiator fin damaged
- Radiator clogged
- Thermostat trouble
- Radiator cap trouble
- Radiator fan switch trouble
- Radiator fan relay trouble
- Fan motor broken
- Fan blade damaged
- Water pump not turning
- Water pump impeller damaged

Over Cooling:

Gauge incorrect:
- Water temperature gauge broken
- Water temperature sensor broken

Cooling system component incorrect:
- Radiator fan switch trouble
- Thermostat trouble

Clutch Operation Faulty:

Clutch slipping:
- Friction plate worn or warped
- Steel plate worn or warped
- Clutch spring broken or weak
- Clutch hub or housing unevenly worn
- No clutch lever play
- Clutch inner cable trouble
- Clutch release mechanism trouble

Clutch not disengaging properly:
- Clutch plate warped or too rough
- Clutch spring compression uneven
- Engine oil deteriorated
- Engine oil viscosity too high
- Engine oil level too high
- Clutch housing frozen on drive shaft
- Clutch hub nut loose
- Clutch hub spline damaged
- Clutch friction plate installed wrong
- Clutch lever play excessive
- Clutch release mechanism trouble

Gear Shifting Faulty:

Doesn't go into gear; shift pedal doesn't return:
- Clutch not disengaging
- Shift fork bent or seized
- Gear stuck on the shaft
- Gear positioning lever binding
- Shift return spring weak or broken
- Shift return spring pin loose
- Shift mechanism arm spring broken
- Shift mechanism arm broken
- Shift pawl broken

Jumps out of gear:
- Shift fork ear worn, bent
- Gear groove worn
- Gear dogs and/or dog holes worn
- Shift drum groove worn
- Gear positioning lever spring weak or broken
- Shift fork guide pin worn
- Drive shaft, output shaft, and/or gear splines worn

Overshifts:
- Gear positioning lever spring weak or broken
- Shift mechanism arm spring broken

Abnormal Engine Noise:

Knocking:
- IC igniter in ECU trouble
- Carbon built up in combustion chamber
- Fuel poor quality or incorrect
- Spark plug incorrect
- Overheating

Piston slap:
- Cylinder/piston clearance excessive
- Cylinder, piston worn
- Connecting rod bent
- Piston pin, piston pin hole worn

Valve noise:
- Valve clearance incorrect
- Valve spring broken or weak
- Camshaft bearing worn
- Valve lifter worn

Other noise:
- Connecting rod small end clearance excessive
- Connecting rod big end clearance excessive
- Piston ring/groove clearance excessive
- Piston ring worn, broken, or stuck
- Piston ring groove worn
- Piston seizure, damage
- Cylinder head gasket leaking

Troubleshooting Guide

Exhaust pipe leaking at cylinder head connection
Crankshaft runout excessive
Engine mount loose
Crankshaft bearing worn
Primary gear worn or chipped
Camshaft chain tensioner trouble
Camshaft chain, sprocket, guide worn
Air suction valve damaged
Vacuum switch valve damaged
Alternator rotor loose
Catalytic converter melt down due to muffler overheating (KLEEN)

Abnormal Drive Train Noise:

Clutch noise:
Clutch damper weak or damaged
Clutch housing/friction plate clearance excessive
Clutch housing gear worn
Wrong installation of outside friction plate

Transmission noise:
Bearings worn
Transmission gear worn or chipped
Metal chips jammed in gear teeth
Engine oil insufficient

Drive line noise:
Drive chain adjusted improperly
Drive chain worn
Rear and/or engine sprocket worn
Chain lubrication insufficient
Rear wheel misaligned

Abnormal Frame Noise:

Front fork noise:
Oil insufficient or too thin
Spring weak or broken

Rear shock absorber noise:
Shock absorber damaged

Disc brake noise:
Pad installed incorrectly
Pad surface glazed
Disc warped
Caliper trouble

Other noise:
Bracket, nut, bolt, etc. not properly mounted or tightened

Oil Pressure Warning Light Goes On:

Engine oil pump damaged
Engine oil screen clogged
Engine oil filter clogged
Engine oil level too low
Engine oil viscosity too low
Camshaft bearing worn
Crankshaft bearing worn
Oil pressure switch damaged
Wiring faulty
Relief valve stuck open
O-ring at the oil passage in the crankcase damaged

Exhaust Smokes Excessively:

White smoke:
Piston oil ring worn
Cylinder worn
Valve oil seal damaged
Valve guide worn
Engine oil level too high

Black smoke:
Air cleaner clogged

Brown smoke:
Air cleaner duct loose
Air cleaner O-ring damaged
Air cleaner poorly sealed or missing

Handling and/or Stability Unsatisfactory:

Handlebar hard to turn:
Cable routing incorrect
Hose routing incorrect
Wiring routing incorrect
Steering stem nut too tight
Steering stem bearing damaged
Steering stem bearing lubrication inadequate
Steering stem bent
Tire air pressure too low

Handlebar shakes or excessively vibrates:
Tire worn
Swingarm pivot bearing worn
Rim warped, or not balanced
Wheel bearing worn
Handlebar clamp bolt loose
Steering stem nut loose
Front, rear axle runout excessive
Engine mounting bolt loose

Handlebar pulls to one side:
Frame bent
Wheel misalignment
Swingarm bent or twisted
Swingarm pivot shaft runout excessive
Steering maladjusted
Front fork bent
Right and left front fork oil level uneven

Shock absorption unsatisfactory:
(Too hard)
Front fork oil excessive
Front fork oil viscosity too high
Rear shock absorber adjustment too hard
Tire air pressure too high
Front fork bent
(Too soft)

Troubleshooting Guide

Tire air pressure too low
Front fork oil insufficient and/or leaking
Front fork oil viscosity too low
Rear shock adjustment too soft
Front fork, rear shock absorber spring weak
Rear shock absorber oil leaking

Brake Doesn't Hold:

Air in the brake line
Pad or disc worn
Brake fluid leakage
Disc warped
Contaminated pad
Brake fluid deteriorated
Primary or secondary cup damaged in master cylinder
Master cylinder scratched inside

Battery Trouble:

Battery discharged:

Charge insufficient
Battery faulty (too low terminal voltage)
Battery lead making poor contact
Load excessive (e.g., bulb of excessive wattage)
Ignition switch trouble
Alternator trouble
Wiring faulty
Regulator/rectifier trouble

Battery overcharged:

Alternator trouble
Regulator/rectifier trouble
Battery faulty

MODEL APPLICATION

Year	Model	Beginning Frame No.
2003	ZX636–B1	JKBZXJB1□3A000001 or JKBZX636BBA000001
2003	ZX600–K1	JKAZX4K1□3A000001 or JKAZX600KKA000001
2004	ZX636–B2	JKBZXJB1□4A023001 or JKBZX636BBA023001

□:This digit in the frame number changes from one machine to another.

Kawasaki
KAWASAKI HEAVY INDUSTRIES, LTD.
Consumer Products & Machinery Company

Part No.99924-1311-03

Printed in Japan